NONRESIDENT
TRAINING
COURSE

July 2000

AIRMAN

NAVEDTRA 14014

DISTRIBUTION STATEMENT A: Approved for public release; distribution is unlimited.

Although the words "he," "him," and "his" are used sparingly in this course to enhance communication, they are not intended to be gender driven or to affront or discriminate against anyone.

DISTRIBUTION STATEMENT A: Approved for public release; distribution is unlimited.

PREFACE

By enrolling in this self-study course, you have demonstrated a desire to improve yourself and the Navy. Remember, however, this self-study course is only one part of the total Navy training program. Practical experience, schools, selected reading, and your desire to succeed are also necessary to successfully round out a fully meaningful training program.

THE COURSE: This self-study course is organized into subject matter areas, each containing learning objectives to help you determine what you should learn along with text and illustrations to help you understand the information. The subject matter reflects day-to-day requirements and experiences of personnel in the rating or skill area. It also reflects guidance provided by Enlisted Community Managers (ECMs) and other senior personnel, technical references, instructions, etc., and either the occupational or naval standards, which are listed in the *Manual of Navy Enlisted Manpower Personnel Classifications and Occupational Standards*, NAVPERS 18068.

THE QUESTIONS: The questions that appear in this course are designed to help you understand the material in the text.

VALUE: In completing this course, you will improve your military and professional knowledge. Importantly, it can also help you study for the Navy-wide advancement in rate examination. If you are studying and discover a reference in the text to another publication for further information, look it up.

2000 Edition Prepared by
AMSC(AW/NAC) Archie Manning

Reissued on March 2001 to correct minor discrepancies or update information. No significant changes have been made to content.

Published by
NAVAL EDUCATION AND TRAINING
PROFESSIONAL DEVELOPMENT
AND TECHNOLOGY CENTER

NAVSUP Logistics Tracking Number
0504-LP-022-4050

Sailor's Creed

"I am a United States Sailor.

I will support and defend the Constitution of the United States of America and I will obey the orders of those appointed over me.

I represent the fighting spirit of the Navy and those who have gone before me to defend freedom and democracy around the world.

I proudly serve my country's Navy combat team with honor, courage and commitment.

I am committed to excellence and the fair treatment of all."

TABLE OF CONTENTS

CHAPTER		PAGE
1.	Mission and History of Naval Aviation	1-1
2.	Organization of Naval Aviation	2-1
3.	Principles of Flight	3-1
4.	Aircraft Basic Construction	4-1
5.	Aircraft Hardware	5-1
6.	Aircraft Power Plants	6-1
7.	Aircraft Avionics	7-1
8.	Aircraft Ordnance	8-1
9.	Support Equipment	9-1
10.	Line Operations and Safety	10-1
11.	Aircrew Survival Equipment	11-1
12.	Crash Rescue and Fire Fighting	12-1

APPENDIX

I.	Glossary	AI-1
II.	References Used to Develop the TRAMAN	AII-1
III.	Answers to Embedded Questions	AIII-1

INDEX INDEX-1

INSTRUCTIONS FOR TAKING THE COURSE

ASSIGNMENTS

The text pages that you are to study are listed at the beginning of each assignment. Study these pages carefully before attempting to answer the questions. Pay close attention to tables and illustrations and read the learning objectives. The learning objectives state what you should be able to do after studying the material. Answering the questions correctly helps you accomplish the objectives.

SELECTING YOUR ANSWERS

Read each question carefully, then select the BEST answer. You may refer freely to the text. The answers must be the result of your own work and decisions. You are prohibited from referring to or copying the answers of others and from giving answers to anyone else taking the course.

SUBMITTING YOUR ASSIGNMENTS

To have your assignments graded, you must be enrolled in the course with the Nonresident Training Course Administration Branch at the Naval Education and Training Professional Development and Technology Center (NETPDTC). Following enrollment, there are two ways of having your assignments graded: (1) use the Internet to submit your assignments as you complete them, or (2) send all the assignments at one time by mail to NETPDTC.

Grading on the Internet: Advantages to Internet grading are:

- you may submit your answers as soon as you complete an assignment, and
- you get your results faster; usually by the next working day (approximately 24 hours).

In addition to receiving grade results for each assignment, you will receive course completion confirmation once you have completed all the assignments. To submit your assignment answers via the Internet, go to:

http://courses.cnet.navy.mil

Grading by Mail: When you submit answer sheets by mail, send all of your assignments at one time. Do NOT submit individual answer sheets for grading. Mail all of your assignments in an envelope, which you either provide yourself or obtain from your nearest Educational Services Officer (ESO). Submit answer sheets to:

COMMANDING OFFICER
NETPDTC N331
6490 SAUFLEY FIELD ROAD
PENSACOLA FL 32559-5000

Answer Sheets: All courses include one "scannable" answer sheet for each assignment. These answer sheets are preprinted with your SSN, name, assignment number, and course number. Explanations for completing the answer sheets are on the answer sheet.

Do not use answer sheet reproductions: Use only the original answer sheets that we provide—reproductions will not work with our scanning equipment and cannot be processed.

Follow the instructions for marking your answers on the answer sheet. Be sure that blocks 1, 2, and 3 are filled in correctly. This information is necessary for your course to be properly processed and for you to receive credit for your work.

COMPLETION TIME

Courses must be completed within 12 months from the date of enrollment. This includes time required to resubmit failed assignments.

PASS/FAIL ASSIGNMENT PROCEDURES

If your overall course score is 3.2 or higher, you will pass the course and will not be required to resubmit assignments. Once your assignments have been graded you will receive course completion confirmation.

If you receive less than a 3.2 on any assignment and your overall course score is below 3.2, you will be given the opportunity to resubmit failed assignments. **You may resubmit failed assignments only once.** Internet students will receive notification when they have failed an assignment—they may then resubmit failed assignments on the web site. Internet students may view and print results for failed assignments from the web site. Students who submit by mail will receive a failing result letter and a new answer sheet for resubmission of each failed assignment.

COMPLETION CONFIRMATION

After successfully completing this course, you will receive a letter of completion.

ERRATA

Errata are used to correct minor errors or delete obsolete information in a course. Errata may also be used to provide instructions to the student. If a course has an errata, it will be included as the first page(s) after the front cover. Errata for all courses can be accessed and viewed/downloaded at:

http://www.advancement.cnet.navy.mil

STUDENT FEEDBACK QUESTIONS

We value your suggestions, questions, and criticisms on our courses. If you would like to communicate with us regarding this course, we encourage you, if possible, to use e-mail. If you write or fax, please use a copy of the Student Comment form that follows this page.

For subject matter questions:

E-mail: n315.products@cnet.navy.mil
Phone: Comm: (850) 452-1001, Ext 1714
DSN: 922-1001, Ext 1714
FAX: (850) 452-1370
(Do not fax answer sheets.)
Address: COMMANDING OFFICER
NETPDTC (CODE N315)
6490 SAUFLEY FIELD ROAD
PENSACOLA FL 32509-5237

For enrollment, shipping, grading, or completion letter questions

E-mail: fleetservices@cnet.navy.mil
Phone: Toll Free: 877-264-8583
Comm: (850) 452-1511/1181/1859
DSN: 922-1511/1181/1859
FAX: (850) 452-1370
(Do not fax answer sheets.)
Address: COMMANDING OFFICER
NETPDTC (CODE N331)
6490 SAUFLEY FIELD ROAD
PENSACOLA FL 32559-5000

NAVAL RESERVE RETIREMENT CREDIT

If you are a member of the Naval Reserve, you will receive retirement points if you are authorized to receive them under current directives governing retirement of Naval Reserve personnel. For Naval Reserve retirement, this course is evaluated at 18 points. These points will be credited in units as follows: Unit 1: 12 points upon satisfactory completion of Assignments 1 thru 8. Unit 2 : 6 points upon satisfactory completion of Assignments 9 thru 12. (Refer to *Administrative Procedures for Naval Reservists on Inactive Duty*, BUPERSINST 1001.39, for more information about retirement points.)

COURSE OBJECTIVES

When you complete this course you will be familiar with the mission and history of naval aviation as well as the organization of naval aviation. You will also have knowledge of the principles of flight, aircraft construction, aircraft hardware and power plants, aircraft avionics and ordnance, support equipment, line operations and safety, aircrew survival equipment, and crash rescue and fire fighting.

Student Comments

Course Title: *Airman*

NAVEDTRA: *14014* **Date**: _____

We need some information about you:

Rate/Rank and Name: _____ SSN: _____ Command/Unit _____

Street Address: _____ City: _____ State/FPO: _____ Zip _____

Your comments, suggestions, etc.:

Privacy Act Statement: Under authority of Title 5, USC 301, information regarding your military status is requested in processing your comments and in preparing a reply. This information will not be divulged without written authorization to anyone other than those within DOD for official use in determining performance.

NETPDTC 1550/41 (Rev 4-00)

CHAPTER 1

MISSION AND HISTORY OF NAVAL AVIATION

INTRODUCTION

Today's naval aircraft have come a long way from the Wright Brothers' flying machine. These modern and complex aircraft require a maintenance team that is far superior to those of the past. You have now joined this proud team.

You, the Airman Apprentice, will get a basic introduction to naval aviation from this training manual. In the *Airman* manual, you will learn about the history and organization of naval aviation; the design of an aircraft, its systems, line operations, and support equipment requirements; and aviation safety, rescue, crash, and fire fighting.

In this chapter, you will read about some of the historic events of naval aviation. Also, you will be introduced to the Airman rate and different aviation ratings in the Navy. You will find out about your duties as an Airman. Leadership and training are going to become an everyday part of your life while you are in the Navy. With your basic naval training completed, you have a chance to experience some of the other types of training available to you. Leadership is an important aspect of any military organization. Leadership and teamwork go hand-in-hand, starting right here in the Airman rate.

THE MISSION OF NAVAL AVIATION

LEARNING OBJECTIVE: Identify the overall mission of naval aviation.

Other countries look upon the United States as the leader of the free world. This accomplishment comes partly through our military strength achieved through sea power. The ability to fight in World War II, the Korean War, and the Vietnam War came directly from the Navy's sea power.

The mission of naval aviation is to support our naval forces. This support helps keep vital sea lanes open and denies their use to enemy forces in time of war. To accomplish this task, naval aviation has a primary function. The primary function of naval aviation is to closely coordinate with other naval forces in maintaining command of the seas. Accomplishing this task takes five basic operations:

1. Eyes and ears of the fleet. Naval aviation has over-the-horizon surveillance equipment that provides vital information to our task force operation.

2. Protection against submarine attack. Anti-submarine warfare operations go on continuously for the task force and along our country's shoreline. This type of mission includes hunter/killer operations to be sure of task force protection and to keep our coastal waterways safe.

3. Aid and support operations during amphibious landings. From the beginning to the end of the operations, support occurs with a variety of firepower. Providing air cover and support is an important function of naval aviation in modern, technical warfare.

4. Rapid logistic support for ground forces. Logistic support aircraft strongly support the mobility of the ground forces. Providing logistic support aircraft is another required function of naval aviation.

5. Search and rescue operations. During sea missions, the possibility of a downed aircraft or man overboard always exists. Search and rescue helps reduce the number of lives lost.

As you can see, naval aviation plays many critical roles in the support of the Navy's mission. The overall mission of the United States Navy depends on the use of highly complex aircraft.

Q1-1. What is the mission and primary function of naval aviation?

THE HISTORY OF NAVAL AVIATION

LEARNING OBJECTIVE: Recognize some of the important events in naval aviation.

The Navy's interest in airplanes as a naval weapon dates back to 1898. Several naval officers became members of an interservice board. Their job was to observe and investigate the military possibilities of the new flying machine. In 1908 and 1909, naval officer observers were present at the public demonstrations staged by the Wright brothers.

The following paragraphs chart the history of naval aviation from 1910 to the present.

1910

The first successful launch of a aircraft from a ship was made by Eugene Ely, who flew a Curtiss biplane from a specially built 83-foot wooden platform on the forecastle of the cruiser *Birmingham*. See figure 1-1.

1911

On 8 May 1911, the Navy purchased its first aircraft from Glenn Curtiss—the A-1 *Triad*. This date of purchase became the official birthday of naval aviation. The Wright brothers soon sold the Navy another aircraft. Curtiss and the Wrights agreed to train a pilot and a mechanic.

Eugene Ely landed on a 120-foot wooden platform built on the after turret of the *Pennsylvania* (fig. 1-2). Then, Ely launched from the wooden platform and flew back to shore. The day of the "aircraft carrier" had arrived. By the end of 1911, the U.S. Navy had three aircraft, four pilots, and one naval air station located at Greenbury Point, near Annapolis, Maryland. The station eventually moved to North Island, California. Later, the Naval Aeronautic Station, Pensacola, Florida, was established and became the primary training facility for all naval aviators and enlisted aircrew personnel.

1917

When the U.S. declared war on Germany on 6 April 1917, naval aviation had 48 officers and 239 enlisted men. There were 54 aircraft, 1 airship, 3 balloons, and 1 naval air station. By the end of WWI, naval aviation had 6,716 officers, 30,693 enlisted men, 252 land air craft, and 1,865 flying boats and seaplanes. Naval aviation had grown enormously and was well on its way.

1922

The converted collier ship *Jupiter* (AC-3) was renamed USS *Langley* and commissioned. It became the first official aircraft carrier (CV-1) supporting fighter and torpedo bomber squadrons. See figure 1-3.

1940s

Five more aircraft carriers joined the carrier task force before the outbreak of World War II.

1941. The U.S. Congress declared a state of war with Japan. During World War II, the F-6F *Hellcat*,

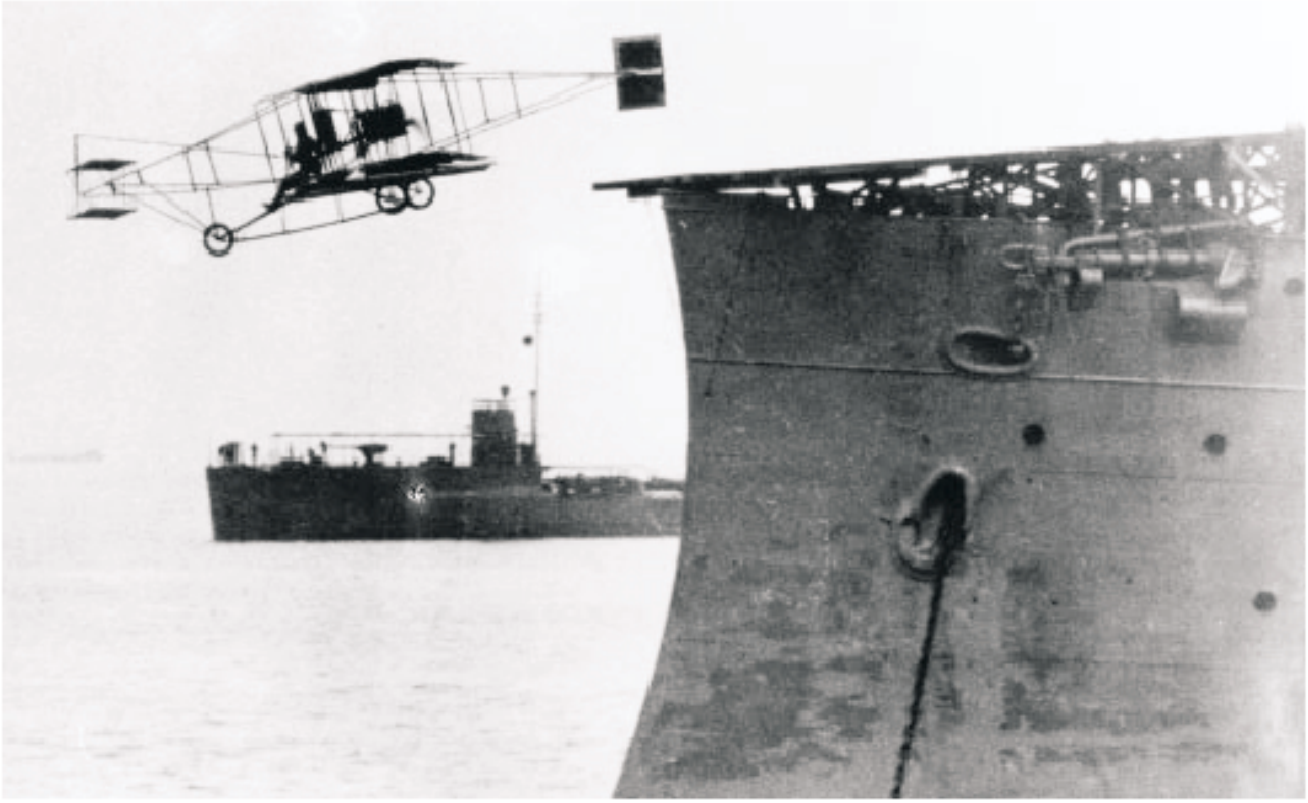

ANF0101

Figure 1-1.—Eugene Ely in the first takeoff from a ship, November 14, 1910.

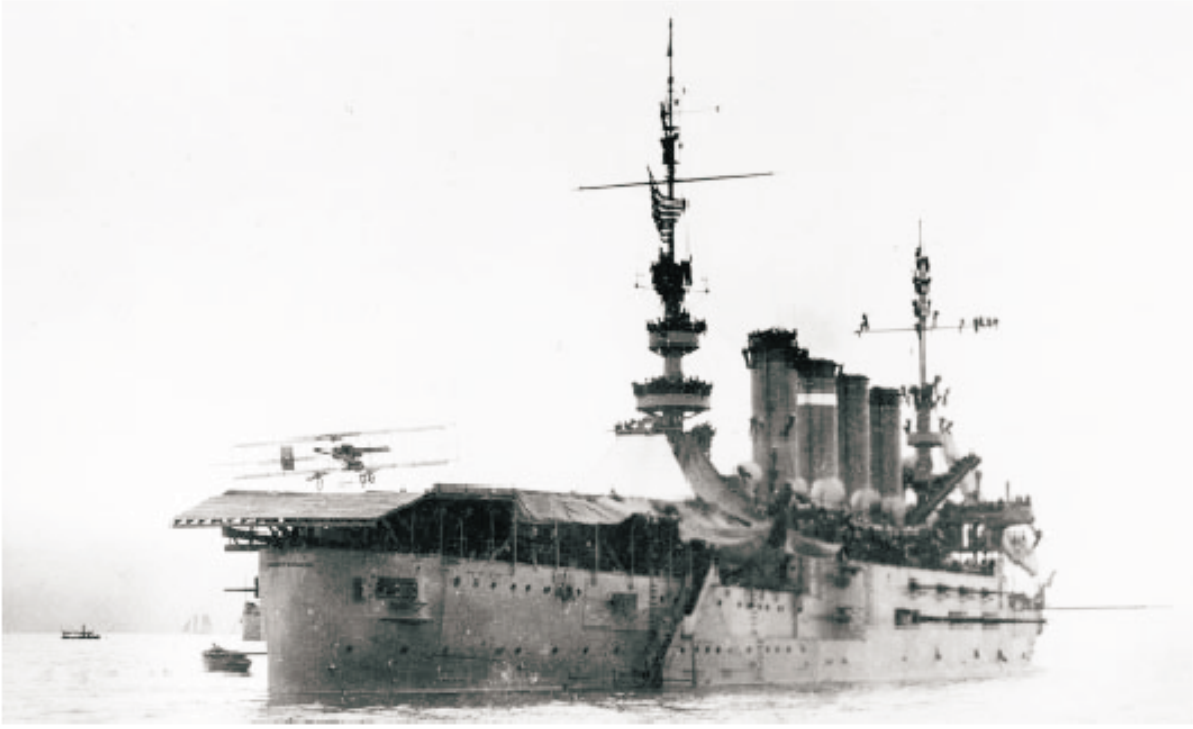

ANF0102

Figure 1-2.—Ely in Curtiss byplane comes aboard the USS Pennsylvania in the first shipboard landing on January 18, 1911.

F-4U *Corsair*, SB-2C *Helldiver*, and TBM *Avenger* were carrier based. Patrol aircraft consisted of the PBY/PBM *Mariner*, PB-4Y, and PV *Ventura* aircraft. The R-4D *Skytrain* was used for transport and cargo.

Naval aviation strength was 5,233 aircraft, 5,900 Navy and Marine Corps pilots, and 21,678 enlisted men.

1942. The **Battle of Coral Sea** caused the Japanese to abandon their attempt to land at Port Moresby. Carrier-based aircraft attacked the Japanese task force and their landing forces. This was the first major battle without opposing ships making contact.

The **Battle of Midway** was the turning point of the war in the Pacific. Japan suffered heavy losses to their

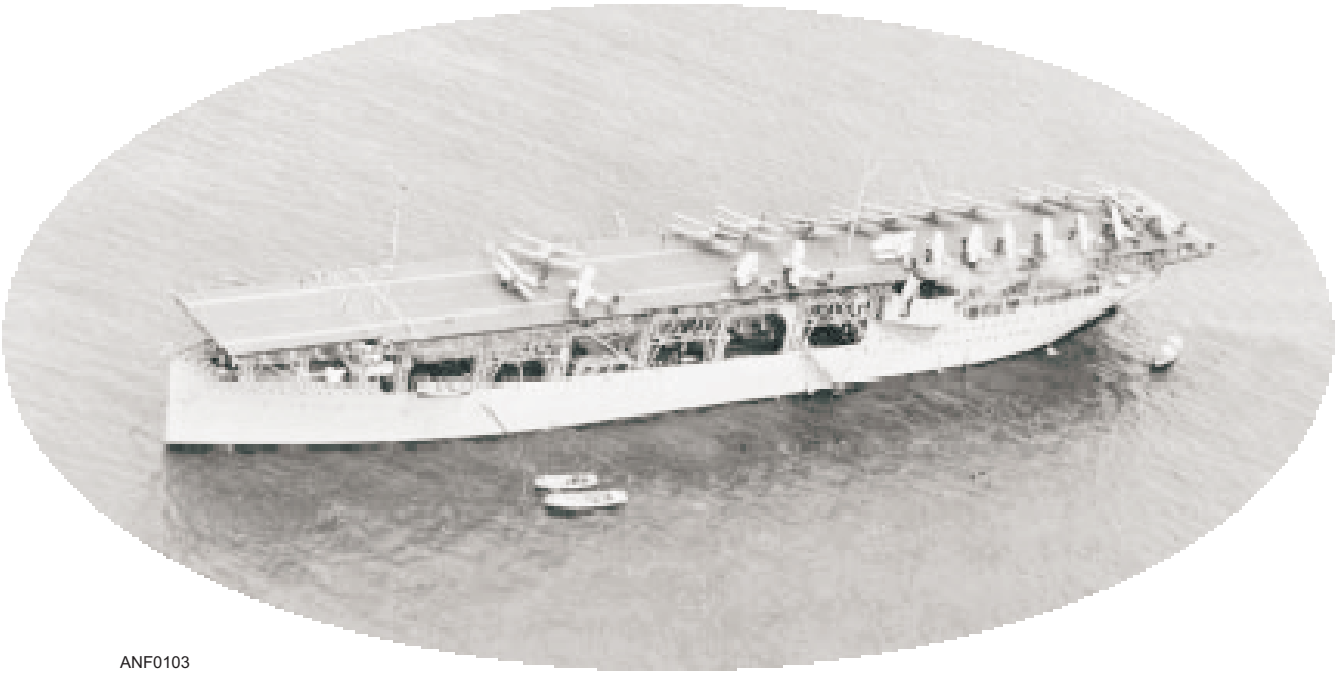

ANF0103

Figure 1-3.—The first Naval aircraft carrier USS Langley (CV-1).

surface force, their aircraft, and experienced aircraft pilots.

Five carriers took part in the **Battle of Guadalcanal**. Carrier-based aircraft flew interceptor patrols, offensive missions against shipping, and close air support for ground forces until the island was secured.

1943. U.S. Navy enters the helicopter field of aviation by purchasing helicopters from U.S. Army. Also, the Navy purchased a helicopter manufactured to Navy specifications from the Sikorsky Helicopter Company—the YR-4B. Westinghouse developed the first turbojet engine (19A) for the Navy.

1948. The Navy commissioned its first helicopter squadron—the HU-1, and the first carrier landing was made by a U.S. Navy jet (the FJ-1 *Fury* lands aboard the USS *Boxer*).

1949. The first use of a pilot ejection seat for an emergency escape was made from an F2H-1 *Banshee*. Also, a new fighter aircraft was added to the Navy inventory (the F9F-2/5 *Panther*), and was manufactured by Grumman Aircraft Company.

1950s

Carrier aircraft went into action in the Korean conflict, which ended July 27, 1953.

1953. Naval aircraft conducted initiation test operations aboard the Navy's first angled deck carrier, the USS *Antietam.*

1954. Guided, air-to-air and air-to-surface missiles were perfected and placed into operation. The Polaris, Sidewinder, Sparrow, and Petrel missiles became standard equipment.

1957. The first successful Automatic Landing System test was done on the USS *Antietam*. It was designed to bring planes aboard the ship in all weather without help from the pilot. Also, the first F8U-1 *Crusader* was delivered to the fleet. The first operationally equipped jet plane in history to fly faster than 1,000 mph.

1959. Four naval aviators were selected as prospective astronauts under Project *Mercury*—a program of space exploration and manned orbital flight. The Sikorsky HSS-2 amphibious, all weather, antisubmarine helicopter made its first flight.

1960s

Naval Aviation was approaching its golden anniversary, and support of the space program was made a priority as manned orbital flight became a reality. Also, recovering space vehicles became one of the Navy's responsibilities. A carrier recovery ship, carrier-based helicopters, and specially trained crews carried out this mission.

1961. The United States becomes officially involved in the Vietnam conflict. Naval aviator, Alan B. Shepard Jr., became the first American to go into space by completing a flight reaching 116 miles high and 302 miles down range before recovery by a Navy HUS-1 helicopter and the USS *Lake Champlain.* Also, the worlds first nuclear-powered aircraft carrier, the USS *Enterprise* (CVAN-65), was commissioned.

1962. The Naval Aviation Museum was established at the Naval Air Station, Pensacola, Florida, by the Secretary of the Navy.

1964. Vertical replenishment by helicopters and picking up stores and delivering them to other surface combat ships began with the commissioning of the combat stores ship USS *Mars* (AFS-1).

1965. The United States is fully involved in the Vietnam conflict. Seventh fleet air units begin operation *Rolling Thunder,* a systematic bombing of military targets throughout North Vietnam waged by land and sea based A-4 *Skyhawks*, F-4 *Fanthoms*, A-6 *Intruders*, and A-7 *Corsair* aircraft.

1967. Fire broke out on the flight deck of the USS *Forrestal* (CV-59) and soon spread below decks igniting bombs and ammunition. Heroic efforts brought the fire under control but damage to the ship and aircraft was severe. These were 132 dead, 62 injured, and two missing and presumed dead. Also, the Aircraft Intermediate Maintenance Department (AIMD) was established by the Chief of Naval Operations (CNO) on all operating aircraft carriers except the one operating with the Naval Air Training Command.

1969. *Apollo* 11 lands on the moon with naval aviator Neil Armstrong; Edwin Aldrin, USAF: and Michael Collins, USAF. Armstrong and Aldrin walked on the moon 20 and 21 July.

1970s

Naval aviation beginning its seventh decade heavily embroiled with Vietnam and a growing crisis in the Middle East re-emphasized the importance of the U.S. Navy to keep the sea lanes open. This required the

reliability of established and upgraded weapons systems and materials.

1971. Navy takes delivery of the AV-8 *Harrier*, a fixed wing, vertical takeoff and landing (V/STOL) jet aircraft used for combat, and the EA-6B *Prowler*, the newest carrier-based sophisticated electronic warfare aircraft. The Navy also received the new CH-53A *Sea Stallion*, a helicopter devoted exclusively to mine countermeasures. By towing specially designed magnetic and acoustical equipment, the CH-53 locates and activates enemy mines.

1972. The Navy receives its first new fighter aircraft in 14 years, the F-14 *Tomcat*, which replaces the aging McDonnell Douglas F-4 *Phantom II*. The war continued in Vietnam. Navy and Marine Corps pilots were being rescued, over land and at sea, by Search and Rescue (SAR) helicopter crews.

1973. The Vietnam cease-fire was announced, and U.S. forces start to withdraw. The Navy lost 529 fixed-wing aircraft and 13 helicopters, and the Marine Corps lost 193 fixed-wing aircraft and 270 helicopters in enemy actions. Operation *Homecoming* begins, which provides for the repatriation of prisoners of war (POWs). The *Blue Angels* became the Navy Flight Demonstration Squadron, located at Naval Air Station, Pensacola, Florida.

1974. The Navy receives its new highly advanced, carrier-qualified, jet powered, turbofan S-3 *Viking* antisubmarine warfare aircraft that works in tandem with the SH-3 *Sea King* and SH-2 *Seasprite* helicopters in locating and tracking submarines.

1976. The Navy's last operational HU-16 *Albatross* seaplane, S-2 *Tracker* antisubmarine warfare, and C-117 *Douglas DC-3* transport aircraft were stricken from service. All arrived or departed NAS Pensacola, Florida, and can be found at the Naval Aviation Museum, Pensacola, Florida, or Davis Monthan Air Force Base, Arizona, the boneyard for obsolete military aircraft.

1979. Navy carrier forces and air wings responded to five crisis situations around the world. USS *Constellation* to a conflict between North and South Yemen; USS *Saipan* during the Nicaraguan turmoil; USS *Nassau* involved in response to Russian combat troops in Cuba; USS *Kitty Hawk* on alert in Korea; USS *Kitty Hawk* and USS *Midway* conduct contingence operations during the Iranian hostage crisis.

1980s

As Naval Aviation approaches its "Diamond Anniversary" decade, war erupts between Iraq and Iran as U.S. carrier forces maintain their deployment cycles in support of the Iranian crisis in the Arabian Sea, provide humanitarian support to Cuban refugees in the Caribbean, and defense capabilities for the Panama Canal. An increase in new technology and research produce new versions of the F/A-18 *Hornet*, SH-60 *Seahawk*, OV-10 *Bronco*, MH-53 *Sea Stallion*, and the V-22 *Osprey*, a fixed-wing, tilt-rotor aircraft.

1981. The first flight of the Space Shuttle (*Columbia*), with an all-Navy crew, launched from Cape Canaveral, Florida.

1983. Combat amphibious assault operations commence on the island of Grenada. Navy and Marine Corps air support was provided by Carrier Air Wing Six (CVW-6) aboard USS *Independence*.

1986. Naval aviation celebrates its 75th anniversary while U.S. carrier forces attack Libyan targets with HARM, Harpoon, and Shrike missiles. The F-14 *Tomcat*, F-18 *Hornet*, and A-6 *Intruder* aircraft conducted low-level bombing and fighter support for the operation.

1988. Helicopter Squadron (HCS-5) was established. The first of its kind, with a primary mission of combat search and rescue (strike rescue) and special warfare support. It operates the HH-60 *Seahawk*.

1990s

This decade begins with a "new world" order. The collapse of the Soviet Union left the United States as the world's only superpower. In the Middle East, Iraq invades Kuwait, a massive armada of U.S. Naval and Allied Forces converge on the region in support of "Operations Desert Shield and Desert Storm."

1991. The Navy launches massive aerial attacks with *Tomahawk* cruise missiles at predetermined targets in Iraq and Kuwait. U.S. Naval, Marine Corps, Air Force, and Allied aircraft of all types made a quick and decisive blow to the Iraqi ground and air forces, resulting in the liberation of Kuwait and the end of the Persian Gulf War.

1992. The USS *Lexington*, the Navy's unsinkable "Blue Ghost" of World War II, was decommissioned and turned into a memorial museum ship. The Navy takes delivery of its newest training aircraft, the T-45 *Goshawk*, which will replace the aging T-2 *Buckeye* and TA-4 *Skyhawk*.

1993. Secretary of Defense lifted the ban on combat flights for women and allows assignments on combat vessels. U.S. Naval surface and air forces maintain a vigilant presence in the Persian Gulf in support the United Nations Security Counsels "No-Fly" zone over Iraq.

1994. The first of many "female" naval aviators successfully pass fleet carrier qualifications in combat aircraft. The USS *Eisenhower* becomes the first combat ship to receive permanently assigned women.

1995. The first female Naval Aviator goes into space, and the F-117A *Stealth* fighter/bomber is operational. The entire U.S. Armed Services has regionalized and downsized, and U.S. forces maintain support for operations in Bosnia and other areas of the world. New technology and the national interest will determine the future of the Navy, and Naval Aviation will always have a major role.

Q1-2. The Navy purchased its first aircraft from what company on what date?

Q1-3. Who was the first Naval Aviator to fly into space?

Q1-4. What year did the Secretary of Defense lift the band allowing women into combat roles?

THE AIRMAN RATE

LEARNING OBJECTIVES: Identify the growth of the Airman rate from the beginning of the rate to the present day. Identify the aviation general ratings and those general ratings that include service ratings, and recognize the duties of these ratings. Recognize the general principles of good leadership as they apply to the Airman.

During the early years of naval aviation, enlisted personnel came from similar surface ratings in the Navy. The first requirement was for aircraft mechanics. Personnel came from the Machinist's Mate rating and became Machinist's Mate (Aviation). Later, this rating became the Aviation Machinist's Mate (AMM) rating.

Special training was necessary during World War II. These specialties became part of a basic rating. There were several specialties that became part of the Aviation Machinist's Mate (AMM) rating.

In 1948, there was a major change in the aviation rating structure. The Airman rate came into being. The titles and/or initials of some aviation ratings changed. For example, the initials for the Aviation Machinist's Mate rating changed from AMM to AD. The specialties moved to the basic AD rating or other basic ratings. The letter D in the Aviation Machinist's Mate initials (AD) avoids confusion with the Aviation Structural Mechanic (AM). Personnel in the AMMC, AMMF, AMMP, and AMMT specialties became ADs.

The AMMHs became a part of the Aviation Structural Mechanic (AM) rating. The AMMIs became a part of the Aviation Electrician's Mate (AE) rating. Many other titles and changes to ratings occurred at that time.

New ratings were established after 1948. They are the Aviation Maintenance Administrationman, Aviation Support Equipment Technician, Aviation Antisubmarine Warfare Operator, and Aviation Antisubmarine Warfare Technician. In 1958, additional E-8 and E-9 paygrades (senior and master chief) were established.

During this period, the title of the Airman rate has not changed. The advancement of aviation has caused the requirements of the rate to change. The requirements will continue to change in the future. You can find the requirements for all ratings in the *Manual of Navy Enlisted Manpower and Personnel Classifications and Occupational Standards*, NAVPERS 18068.

AVIATION RATINGS

A basic knowledge of the duties and skills of the Airman rate is necessary. You can obtain this knowledge either at a service school or by experience and self-study.

The **general aviation ratings** identify personnel from paygrades E-4 through E-9. Exceptions do exist where a general rating begins and/or ends at other paygrades. An example of a general rating that does not have any service ratings is the Aviation Ordnanceman (AO) rating. An example of a general rating that begins at paygrade E-6 instead of E-4 is the Aviation Support Equipment Technician (AS) rating.

The **aviation service ratings**, subdivisions of a general rating, require specialized training within that general rating. For example, the Aviation Boatswain's Mate (AB) rating has three service ratings (ABE) (ABF) and (ABH). The Aviation Structural Mechanic (AM) rating has three service ratings (AME) (AMH) and (AMS). These service ratings begin at paygrade E-4.

The aviation ratings career progression paths are shown in figure 1-4.

RATING TITLE	E-4	E-5	E-6	E-7	E-8	E-9
AEROGRAPHER'S MATE	AG3	AG2	AG1	AGC	AGCS	AGCM
AIR TRAFFIC CONTROLLER	AC3	AC2	AC1	ACC	ACCS	ACCM
AIRCREW SURVIVAL EQUIPMENTMAN	PR3	PR2	PR1	PRC	PRCS	PRCM
AVIATION WARFARE SYSTEMS OPERATOR	AW3	AW2	AW1	AWC	AWCS	AWCM
AVIATION BOATSWAIN'S MATE	ABE3 ABF3 ABH3	ABE2 ABF2 ABH2	ABE1 ABF1 ABH1	ABEC ABFC ABHC	ABCS	ABCM
AVIATION ELECTRICIAN'S MATE	AE3	AE2	AE1	AEC	AECS	AVCM
AVIATION ELECTRONICS TECHNICIAN	AT3(I) AT3(O)	AT2(I) AT2(O)	AT1(I) AT1(O)	ATC(I) ATC(O)	ATCS(I) ATCS(O)	AVCM
AVIATION MACHINIST'S MATE	AD3	AD2	AD1	ADC	ADCS	AFCM
AVIATION MAINTENANCE ADMINISTRATIONMAN	AZ3	AZ2	AZ1	AZC	AZCS	AZCM
AVIATION ORDNANCEMAN	AO3	AO2	AO1	AOC	AOCS	AOCM
AVIATION STOREKEEPER	AK3	AK2	AK1	AKC	AKCS	AKCM
AVIATION STRUCTURAL MECHANIC	AME3 AMH3 AMS3	AME2 AMH2 AMS2	AME1 AMH1 AMS1	AMEC AMHC AMSC	AMCS	AFCM
AVIATION SUPPORT EQUIPMENT TECHNICIAN	ASE3 ASM3	ASE2 ASM2	AS1	ASC	ASCS	ASCM
PHOTOGRAPHER'S MATE	PH3	PH2	PH1	PHC	PHCS	PHCM

ANF0104

Figure 1-4.—Paths of advancement for enlisted personnel.

DESCRIPTION OF AVIATION RATINGS

The following paragraphs contain a description of each aviation rating.

Aerographer's Mate (AG)

A description of the AG rating includes the following:

- Observe, collect, record, and analyze meteorological and oceanographic data.
- Make visual and instrumental observations of weather and sea conditions.
- Operate meteorological satellite receivers and interpret and apply satellite data.
- Interpret meteorological and oceanographic codes and enter data on appropriate charts.
- Operate ancillary computer equipment for the processing, dissemination, and display of environmental data.
- Perform preventive maintenance on meteorological and oceanographic equipment.
- Prepare warnings of severe and hazardous weather and sea conditions.
- Forecast meteorological and oceanographic conditions.
- Prepare and present briefings concerning current and predicted environmental conditions and their effect on operations.

Air Traffic Controller (AC)

A description of the AC rating includes the following:

- Perform air traffic control duties in air control towers, radar air traffic control facilities, and air operations offices ashore and afloat.
- Operate radiotelephones, light signals and systems, and direct aircraft under Visual Flight Rules (VFR) and Instrument Flight Rules (IFR) conditions.
- Operate surveillance radar, precision radar, and identification equipment (IFF).
- Operate ground- and carrier-controlled approach systems.
- Assist pilots in the preparation and processing of flight plans and clearances.
- Maintain current flight-planning information and reference materials.

Aircrew Survival Equipmentman (PR)

A description of the PR rating includes the following:

- Inspect, maintain, and repair parachutes, survival equipment, and flight and protective clothing and equipment.
- Pack and rig parachutes.
- Pack and equip life rafts.
- Repair and test oxygen regulators and liquid oxygen converters removed from aircraft.
- Fit and maintain oxygen masks, flight clothing, antiexposure suits, and anti-G suits.
- Operate and maintain carbon dioxide transfer and recharge equipment.
- Conduct inspects of survival equipment; supervise operation of parachute lofts and survival equipment work centers.

Aviation Warfare Systems Operator (AW)

The AW rating consists of three service ratings, E-4 through E-6 paygrades. These ratings are the AWA (Acoustic), the AWH (Helicopter), and the AWN (Nonacoustic) ratings. A description of these ratings is as follows:

- Perform general flight crew duties.
- Operate ASW sensor systems to extract, analyze, and classify data obtained.
- Perform specified preflight, inflight, and postflight diagnostic functions, using manual techniques, built-in test equipment (BITE), and computer routines to isolate faults and optimize system performance.
- Operate tactical support center systems to analyze and classify ASW data.
- Assist in aircrew briefing and debriefing.
- Provide database information to the tactical commander for use in prescribing mission objectives and tactics.

Aviation Boatswain's Mate (AB)

The AB rating is made up of the three service ratings, E-4 through E-7 paygrades. These ratings are the ABE, ABF, and the ABH ratings.

AVIATION BOATSWAIN'S MATE, LAUNCHING AND RECOVERY EQUIPMENT (ABE).—A description of the ABE rating includes the following:

- Operate, maintain, and perform organization maintenance on hydraulic and steam catapults, barricades, arresting gear, arresting gear engines, and associated equipment ashore and afloat.
- Operate catapult launch and retract panels, consoles, firing panels, water brakes, chronographs, blast deflectors, and cooling panels.
- Rig, inspect, proof-load cables and fittings, and pour wire rope sockets.
- Perform aircraft-handling duties related to the operation of aircraft launching and recovery equipment.

AVIATION BOATSWAIN'S MATE, FUELS (ABF).—A description of the ABF rating includes the following:

- Operate, maintain, and perform organizational maintenance on aviation fueling and lubricating oil systems in CVs (aircraft carriers), LPHs (amphibious assault ships), and LPDs (amphibious transport docks), including aviation fuel and lubricating oil service stations and pump rooms, piping, valves, pumps, tanks, and portable equipment related to the fuel system.
- Operate, maintain, and repair valves and piping of purging and protective systems within the air department spaces aboard ship.
- Supervise the operation and servicing of fuel farms, and equipment associated with the fueling and defueling of aircraft ashore and afloat.
- Operate and service motorized fueling equipment.
- Maintain fuel quality surveillance and control in aviation fuel systems ashore and afloat.
- Train, direct, and supervise fire-fighting crews, fire rescue teams, and damage control parties in assigned fuel and lubricating oil spaces.
- Observe and enforce fuel-handling safety precautions.

AVIATION BOATSWAIN'S MATE, AIRCRAFT HANDLING (ABH).—A description of the ABH rating includes the following:

- Direct the movement and spotting of aircraft ashore and float.
- Operate, maintain, and perform organizational maintenance on ground-handling equipment used for moving and hoisting of aircraft ashore and afloat.
- Supervise the securing of aircraft and equipment.
- Perform crash rescue, fire fighting, crash removal, and damage control duties.
- Perform duties in connection with launching and recovery of aircraft.

Aviation Electrician's Mate (AE)

A description of the AE rating includes the following:

- Maintain electrical and instrument systems, including power generation, conversion, and distribution systems, aircraft batteries, interior and exterior lighting.
- Maintain electrical control systems of aircraft, including hydraulic, landing gear, flight control, utility, power plant and related systems.
- Maintain instrument electrical systems, such as aircraft engine, flight, and noninstrument-type indicating and warning systems to include automatic flight control and stabilization systems, aircraft compass systems, attitude reference systems, and inertial navigation systems.

Aviation Electronic Technician, AT(I) and AT(O)

A description of both AT ratings include the following:

- AT(I) performs intermediate-level preventive and corrective maintenance on aviation electronic components supported by conventional and automatic test equipment, including repair of weapons replaceable

assemblies and shop replaceable assemblies. AT(I) also performs microminiature component repair and test equipment qualification and associated test bench preventive and corrective maintenance.

- AT(O) performs organizational-level preventive and corrective maintenance on aviation electronics systems to include communications, radar, navigation, antisubmarine warfare sensors, electronic warfare, data link, fire control, tactical displays, and associated equipment.

Aviation Machinist's Mate (AD)

A description of the AD rating includes the following:

- Maintain aircraft engines and their related systems, including induction, cooling, fuel, oil, compression, combustion, turbine, gas turbine compressor, exhaust, and propeller systems.
- Preflight aircraft.
- Conduct inspections on engine and engine-related systems.
- Field-test and adjust engine components, including fuel controls, pumps, valves, and regulators.
- Remove, repair, and replace compressor and turbine blades and combustion chamber liners.
- Preserve and depreserve engines, engine accessories, and components.
- Supervise engine work centers.

Aviation Maintenance Administrationman (AZ)

A description of the AZ rating includes the following:

- Perform administrative, managerial, and clerical duties required in implementing and supporting the Naval Aviation Maintenance Program (NAMP).
- Plan, program, and coordinate scheduled and unscheduled maintenance tasks and the incorporation of changes and modifications to aircraft and equipment.
- Set up and maintain status boards.
- Collect, compile, analyze, and record data pertaining to the history, operation, maintenance, configuration, receipt, and transfer of naval aircraft and related aeronautical equipment.
- Prepare reports and correspondence.
- Determine requirements for the requisition, control, and issue of change kits.
- Requisition departmental instructions, forms, and technical data.
- Organize, maintain, and operate technical libraries.
- Perform other duties as required when attached to organizational, intermediate, and depot maintenance activities or aviation staff commands.

Aviation Ordnanceman (AO)

A description of the AO rating includes the following:

- Inspect, maintain, and repair armament equipment, including aircraft guns, gun accessories, noncomputing gunsights, aerial-towed target equipment, and handling equipment; and aviation ordnance equipment, including ammunition suspension, release, launching, and arming equipment.
- Store, maintain, assemble, load, and fuze aviation ammunition.
- Load nuclear weapons and aerial mines and torpedoes.
- Load supplementary stores.
- Assemble, test, load, and maintain air-launch guided missiles.
- Operate small arms ranges.
- Supervise the operation of armories, aviation ordnance shops, and aviation ammunition storage facilities.

Aviation Storekeeper (AK)

A description of the AK rating includes the following:

- Receive, identify, store, and issue aviation supplies, spare parts, and stocks of technical aviation items.

- Confirm shipments and make reports of excesses, shortages, or damages.
- Classify and stow materials, using the required protective measures.
- Pack, tag, and inspect equipment and parts.
- Conduct inventories.
- Prepare and maintain records pertaining to stock control and issuance of aviation equipment and materials.
- Process allowance changes, validate requirements, and monitor supply requests.
- Maintain control of status and location of repairable components and retrograde components.

Aviation Structural Mechanic (AM)

The AM rating consists of three service ratings, E-4 through E-7 paygrades. These ratings are the AME, AMH, and the AMS ratings.

AVIATION STRUCTURAL MECHANIC, SAFETY EQUIPMENT (AME).—A description of the AME rating includes the following:

- Maintain safety belts, shoulder harnesses, and integrated flight harnesses in aircraft; inertia reels; seat and canopy ejection systems; gaseous and liquid oxygen systems; lift raft ejection systems; fire-extinguishing systems, excluding fire detection systems; portable fire extinguishers; emergency egress systems; air-conditioning, heating, cabin and cockpit pressurization, ventilating, and anti-G systems; visual improvement systems; other utility systems; and associated lines, fittings, rigging, valves, and control mechanisms.
- Replenish liquid and gaseous oxygen systems.
- Remove and install oxygen system valves, gauges, converters, and regulators.
- Inspect, remove, install, and rig ejection seats, shoulder harnesses, lap belts, and face-curtain mechanisms.
- Inspect, remove, install, and adjust firing mechanisms and cartridges for ejection seats, lap belts, and canopies.
- Operate and maintain liquid nitrogen and liquid and gaseous oxygen shop transfer and recharge equipment.
- Perform preflight, postflight, and other periodic aircraft inspections.

AVIATION STRUCTURAL MECHANIC, HYDRAULICS (AMH).—A description of the AMH rating includes the following:

- Maintain hydraulic systems, including main and auxiliary power systems and unit actuating subsystems; landing gear, excluding wheels and tires; brakes; and related pneumatic systems, including reservoir pressurization, emergency actuating systems, and associated pumps, valves, regulators, actuating cylinders, lines, and fittings.
- Service pressure accumulators, emergency air bottles, oleo struts, reservoirs, and master brake cylinders.
- Inspect, remove, and replace components of hydraulic systems.
- Bleed hydraulic systems.
- Adjust brakes, and replace linings and pucks.
- Replace gaskets, packing, and wipers in hydraulic components.
- Perform daily, preflight, postflight, and other aircraft inspections.

AVIATION STRUCTURAL MECHANIC, STRUCTURES (AMS).—A description of the AMS rating includes the following:

- Maintain aircraft fuselages, wings, fixed and movable surfaces, airfoils, empennages, seats (except ejection seats), wheels and tires and their components, controls, and mechanisms.
- Remove, install, and rig flight control surfaces.
- Fabricate and assemble metal parts, and make minor repairs to aircraft skin.
- Install rivets and metal fasteners.
- Build up wheels and tires.
- Paint.
- Perform dye penetrant inspections.
- Perform daily, preflight, postflight, and other aircraft inspections.

Aviation Support Equipment Technician (AS)

A description of the AS rating includes the following:

- Service, test, and perform organizational- and intermediate-level maintenance and repair of automotive electrical systems in mobile and self-propelled aviation support equipment and aviation armament-handling equipment. This includes generating, starting, lighting, and ignition systems; electrical components and wiring in auxiliary electrical power units used in servicing aircraft; electrical control systems in gas turbine compressor units and air-conditioning systems; and electrical and electronic circuits and components in general aircraft-servicing equipment.
- Service and maintain storage batteries.
- Perform maintenance inspections of aviation support equipment.
- Service, test, maintain, and repair gasoline and diesel engines and associated automotive systems, hydraulic systems, pneumatic systems, and structural components in mobile and self-propelled aviation support equipment.
- Maintain gas turbine compressor units and air-conditioning systems used in servicing aircraft.
- Maintain and operate gas turbine compressor unit test stands.
- Maintain hydraulic test and service equipment, air compressors, jacks, workstands, and associated equipment.
- Perform body and fender metalwork and painting.
- Weld, braze, solder, cut, shape, and patch metal.
- Adjust and repair brake systems.
- Inspect and replace tires and tubes.
- Operate hydraulic test stands.

Photographer's Mate (PH)

A description of the PH rating includes the following:

- Inspect and maintain cameras and camera control equipment, laboratory equipment, and related photographic equipment and accessories.
- Accomplish photographic work required by the naval service.
- Record actual and simulated battle operations.
- Make pictorial records of historic and newsworthy events aboard ship and ashore.
- Expose and process light-sensitive negative and positive material.
- Arrange, compose, and illuminate photographic subjects
- Make finished prints, mosaics, and strip photographs.
- Maintain associated photographic files, records, and supplies.

AIRMAN DUTIES

The five major duties you will perform as an Airman are as follows:

1. Maintain support equipment, compartments, and buildings.
2. Stand security watches.
3. Move aircraft.
4. Participate in working parties.
5. Perform routine duties involved in the operation of a naval aviation activity afloat or ashore.

You will probably have to perform some duties that don't fall into any of the above categories. However, these five duties cover the majority of the tasks you will have to perform.

It's only natural that your first duties will be relatively basic and routine. As you gain knowledge and skill, you will earn more complex responsibilities. You may become a member of the line maintenance crew. At first, you will probably chock the aircraft's wheels and tie the aircraft down at the end of the flying day. Later, you get more responsible jobs to handle on the line, such as giving taxi signals to pilots, refueling aircraft, and inspecting aircraft. Your job may be helping petty officers with certain phases of aircraft line maintenance. The way you perform your job will have a direct bearing on how soon you will receive more advanced assignments. Learn everything you can about each job. Ask questions and observe how qualified personnel accomplished things.

Sometimes you may think there are no other job possibilities for the Airman except washing aircraft, standing watches, and cleaning spaces. This type of work is necessary, and all personnel do it at sometime.

Your own efforts will determine your readiness for other jobs. The Navy needs well-trained personnel, so work in an inspired manner regardless of your chosen rating.

Likewise, when you get aboard ship, you will probably think that your job is only moving aircraft from one spot to another. As with your work ashore, you will have more responsible jobs as you learn your duties afloat.

ASSIGNMENTS

As an Airman Recruit, you will work in one of the more progressive areas of the naval service—naval aviation.

As an Airman Apprentice or Airman, you can expect various assignments. Your job may be on an aircraft carrier as ship's company, where you will work in a variety of jobs. You may work in an operating carrier squadron. Carrier squadrons are shore based, but when the air wing goes aboard a carrier, the squadron will accompany it. You may work in a patrol squadron. Patrol squadrons are on naval air stations in the United States and deploy to overseas bases. You may also work in a training squadron. Your assignment could be with fixed-wing or rotary-wing aircraft.

Shore assignments include naval air stations, naval air facilities, or aircraft intermediate maintenance departments. There are other billet possibilities for the Airman, but those are the major ones. The team assignment is not the important thing. The important thing is to become an integral part of the team. Always do your best to make your team the Navy's finest.

LEADERSHIP

In the Navy, leadership begins early. As an Airman Recruit or Airman Apprentice, you have a limited leadership role. However, you should begin to find out the principles of good leadership. For you to perform your responsibilities as a petty officer, you must display the qualities of good leadership. Why not learn as much as possible about leadership now. Leadership is learned. Those who have become Navy leaders have done so through the application of the principles of leadership from an early age.

This training manual does not present an extended leadership course. However, you will find some of the general principles of leadership in the following paragraphs. If you wish to read more about this subject, refer to *Basic Military Requirements*, NAVEDTRA 12018, and *Military Requirements for Petty Officer Third Class*, NAVEDTRA 12044. Both of these training manuals contain information about leadership.

Military Requirements for Petty Officer Third Class, NAVEDTRA 12044, is primarily for personnel who are preparing for petty officer third class. You may wish to study it to get a head start in leadership training. The *Bibliography for Advancement Examination Study*, NAVEDTRA 10052, provides titles and sections of publications you should study when preparing for the examination. No single publication can give you all the information you need. Your divisional training petty officer or the Educational Services Office (ESO) will assist you.

A thorough knowledge of the work a person is doing is a decided advantage to the prospective leader. It is important that you learn everything you can about the rate requirements of an Airman. You may find yourself in a position where your shipmates come to you for assistance with a problem. When you are able to help with their problems (without embarrassing them), you are on your way to becoming a leader.

You may even be able to do the right things automatically. In this case, it will be a relatively easy job for you to become the type of leader the Navy needs. However, as stated previously, leadership is learned. If you have to think about how you are conducting yourself when giving help, you are normal.

Q1-5. The initial Machinist Mate (Aviation) rate came from what rating?

Q1-6. Major changes to the aviation ratings structure took place in what year?

Q1-7. What manual lists the requirements for all aviation ratings?

Q1-8. What general rating begins at paygrade E-6 instead of E-4?

Q1-9. What are aviation service ratings?

Q1-10. What officer or office should you contact for assistance in finding the publications you need to study for advancement?

SUMMARY

The history and mission of naval aviation tells of its importance, both yesterday and today. By learning about what happened in the past, you gain insight into today's world of naval aviation. Further, knowing yesterday's role of naval aviation will help you know what is expected of you as you work in the aviation field.

(THIS PAGE IS INTENTIONALLY LEFT BLANK.)

ASSIGNMENT 1

Textbook Assignment: "Mission and History of Naval Aviation," chapter 1, pages 1-1 through 1-13.

1-1. Leadership and what other element are now a part of your everyday life in the Navy?

1. Training
2. Motivation
3. Maintenance
4. Organization

1-2. What attribute is the most important aspect of a military organization?

1. Size
2. Leadership
3. Mobility
4. Teamwork

1-3. The mission of the United States Navy is to guard and ensure which of the following task is accomplished?

1. Every ocean has a large naval fleet to defend it
2. The use of the sea lanes is denied to our enemies during peacetime
3. Sea lanes of the world are kept open and safe
4. Our Navy's surface ships guard aircraft carriers

1-4. What is the primary function of naval aviation?

1. To supply the fleet with aircraft for deployment on aircraft carriers
2. To provide the fleet with aircraft pilots and aircrewman
3. To coordinate with other armed forces in maintaining command of the seas
4. To support amphibious landing operations

1-5. What total number of basic operations are there in the primary function of naval aviation?

1. Five
2. Six
3. Seven
4. Eight

1-6. In addition to open ocean protection, naval aviation also provides task force protection to keep our coastal waterways safe?

1. True
2. False

1-7. What is the final basic operation in maintaining command of the seas?

1. Scouting the forward area
2. Antisubmarine warfare
3. Search and rescue
4. Logistic support

1-8. In what year was the Navy first interested in airplanes as a naval weapon?

1. 1888
2. 1898
3. 1910
4. 1911

1-9. Who staged the first demonstration of the new flying machine?

1. Glenn brothers
2. Wright brothers
3. Ely brothers
4. Curtiss brothers

1-10. Eugene Ely first flew a biplane from a wooden platform off of what ship?

1. USS *Pennsylvania*
2. USS *Langley*
3. USS *Birmingham*
4. USS *Jupiter*

1-11. The Navy purchased its first aircraft on what date?

1. June 14, 1910
2. October 30, 1911
3. May 8, 1911
4. April 21, 1898

1-12. At the end of 1911, what total number of aircraft did the Navy have?

1. One
2. Two
3. Three
4. Four

1-13. What was the name of the first aircraft carrier commissioned?

1. USS *Pennsylvania*
2. USS *Jupiter*
3. USS *Langley*
4. USS *Birmingham*

1-14. What major battle in 1942 was the first of opposing ships NOT making contact with each other?

1. Midway
2. Coral Sea
3. Guadalcanal
4. Iwo Jima

1-15. On 16 October 1943, the Navy accepted its first helicopter. What designation was assigned to that helicopter?

1. F6F
2. YR-4B
3. PB4Y
4. TBM

1-16. The Westinghouse 19A jet engine was developed for the Navy in what year?

1. 1943
2. 1953
3. 1963
4. 1973

1-17. On March 1948, the Navy's first jet carrier landing was made on what aircraft carrier?

1. USS *Lexington*
2. USS *Saratoga*
3. USS *Langley*
4. USS *Boxer*

1-18. In what year was the first use of a pilot ejection seat used for emergency escape?

1. 1943
2. 1945
3. 1949
4. 1951

1-19. What was the name of the Navy's first angled deck aircraft carrier?

1. USS *Pennsylvania*
2. USS *Langley*
3. USS *Lexington*
4. USS *Antietam*

1-20. What was the first operationally equipped jet plane in history to fly faster than 1,000 mph?

1. F8U-1 *Crusader*
2. F9F-2/5 *Panther*
3. FJ-1 *Fury*
4. F2H-1 *Banshee*

1-21. In 1959, four naval aviators were selected as prospective astronauts for what space project?

1. Gemini
2. Saturn
3. Apollo
4. Mercury

1-22. Who was the first American and naval aviator to go into space?

1. Neal Armstrong
2. Alan B. Shepard Jr.
3. Edwin Aldrin
4. Michael Collins

1-23. What was the name of the worlds first nuclear-powered aircraft carrier?

1. USS *Coral Sea*
2. USS *Forrestal*
3. USS *Enterprise*
4. USS *Nimitz*

1-24. In 1962, the Naval Aviation Museum was established by the Secretary of the Navy and is located in what city?

1. Washington, DC
2. Philadelphia, PA
3. Pensacola, FL
4. San Diego, CA

1-25. Vertical replenishment by helicopters and picking up and delivering stores to other surface combat surface ships began with the commissioning of the USS *Mars* in what year?

1. 1942
2. 1956
3. 1964
4. 1962

1-26. Who established the Aircraft Intermediate Maintenance Department (AIMD) on all operating aircraft carriers in 1967?

1. Secretary of the Navy
2. Secretary of Defense
3. Chief of Naval Operations
4. President of the United States

1-27. In 1971, the Navy received the new CH-53A *Sea Stallion* helicopter. This helicopter is devoted exclusively to what mission?

1. Mine countermeasures
2. Heavy-lift vertical replenishment
3. Search and rescue operations
4. Combat troop transport

1-28. What do the S-3 *Viking*, SH-3 *Sea King*, and SH-2 *Seasprite* have in common?

1. All are helicopters
2. Their mission is to locate and track submarines
3. They are used for troop transport
4. They are built by the same aircraft manufacturer

1-29. What is the name of the first Space Shuttle to fly with an all-Navy crew?

1. *America*
2. *Enterprise*
3. *Challenger*
4. *Columbia*

1-30. In what year did Naval Aviation celebrate its 75th anniversary?

1. 1979
2. 1981
3. 1983
4. 1986

1-31. What name was given to the U.S. military and Allied Forces operation in the Middle East involving the invasion of Kuwait by Iraq in 1990?

1. Operation Provide Comfort
2. Operation Desert Fox
3. Operation Iron Eagle
4. Operation Desert Shield and Desert Storm

1-32. In what year did the Secretary of Defense lift the band allowing women into combat roles and combat ship assignments?

1. 1991
2. 1992
3. 1993
4. 1994

1-33. What was the first combat ship to receive permanently assigned women?

1. USS *Nimitz*
2. USS *Eisenhower*
3. USS *Stennis*
4. USS *Washington*

1-34. What is the primary mission of the F-117A *Stealth* aircraft?

1. Fighter/bomber
2. Reconnaissance
3. Strike/attack
4. Antisubmarine warfare

1-35. The first requirement for an enlisted rating in aviation pertained to what type of work?

1. Mechanics
2. Electrical
3. Radio
4. Ordnance

1-36. In what year was the Airman rate established?

1. 1911
2. 1942
3. 1948
4. 1958

1-37. In what year was the paygrades E-8 and E-9 (senior and master chief petty officer) established?

1. 1911
2. 1942
3. 1948
4. 1958

1-38. The general aviation ratings identify personnel from what paygrades?

1. E-4 through E-9
2. E-5 through E-7
3. E-1 through E-6
4. E-7 through E-9

1-39. Into what total number of service ratings is the Aviation Boatswain's Mate (AB) divided?

1. One
2. Two
3. Three
4. Four

1-40. What rating makes visual and instrumental observations of weather and sea conditions?

1. AX
2. AG
3. AW
4. AS

1-41. What rating packs and rigs parachutes and life rafts?

1. PR
2. AW
3. AD
4. AT

1-42. What rating operates tactical support center systems to analyze and classify data?

1. AG
2. AK
3. AZ
4. AW

1-43. The ABF rating operates, maintains, and performs maintenance on aviation fueling and lubricating oil systems?

1. True
2. False

1-44. The ABH rating is responsible for performing which of the following tasks?

1. Operate aviation fueling systems
2. Operate catapult launch and retract panels
3. Direct the movement and spotting of aircraft
4. Rig, inspects, and proof-load cables and fittings

1-45. What rating is responsible for performing microminiature repair?

1. AT(O)
2. AT(I)
3. AE
4. ET

1-46. Which of the following ratings maintains aircraft engines and related systems?

1. AD
2. AE
3. AO
4. AS

1-47. Which of the following tasks is NOT a responsibility of the AZ rating?

1. Maintain aircraft status boards
2. Operate technical libraries
3. Prepare reports and correspondence
4. Identify, store, and issue aviation supplies and spare parts

1-48. What rating is responsible for inspecting, maintaining, and repairing armament equipment?

1. AA
2. AG
3. AO
4. AM

1-49. The AM rating consists of how many service ratings?

1. One
2. Two
3. Three
4. Four

1-50. What rating maintains aircraft hydraulic systems?

1. AMS
2. AME
3. AS
4. AMH

1-51. Removing, installing, and rigging the flight control surfaces on a naval aircraft is the responsibility of what rating?

1. AMS
2. AS
3. AMH
4. AME

1-52. What rating maintains and repairs gasoline engines and associated automotive systems?

1. AMS
2. AS
3. AMH
4. AME

1-53. Which of the following ratings is responsible for accomplishing photographic work required by the naval service?

1. PH
2. AK
3. PR
4. AW

1-54. As a member of a line maintenance crew, what are your first duties as an Airman?

1. Move aircraft
2. Participate in working parties
3. Stand security watches
4. All of the above

1-55. To what training manual(s) should you refer to study general principles of leadership?

1. *Military Requirements for Petty Officer Third Class*, NAVEDTRA 12044
2. *Basic Military Requirements*, NAVEDTRA 12018
3. Both 1 and 2 above
4. *Blue Jackets Manual*

1-56. Which of the following manuals should you use to find information about the minimum performance task you should be able to do before you can be considered for advancement?

1. *List of Training Manuals and Correspondence Courses*, NAVEDTRA 10061
2. *Manual of Navy Enlisted Manpower and Personnel Classifications and Occupational Standards*, NAVPERS 18086
3. *Bibliography for Advancement Examination Study*, NAVEDTRA 10052
4. *Basic Military Requirements*, NAVEDTRA 12018

CHAPTER 2

ORGANIZATION OF NAVAL AVIATION

INTRODUCTION

You first learned about Navy organization in recruit training. Here, we deal primarily with the organization of naval aviation. You will become familiar with the overall picture of the organization of naval aviation. This knowledge will help you understand the importance of your job as an Airman.

Naval aviation starts with the Secretary of the Navy, who is head of the Navy Department. The Navy Department is under the cabinet post of the Secretary of Defense. The training manual *Basic Military Requirements*, NAVEDTRA 12018, covers the organization of the Navy Department.

Figure 2-1 shows the operational organization for naval aviation. The Chief of Naval Operations (CNO) is the head of the military part of the Navy Department. He/she is usually the senior naval military officer in the Department.

An organization does not remain static. Missions differ and change. Various missions and tasks influence the organization of a particular squadron, station, or ship.

Whether you are assigned to a shore duty or shipboard billet, you are part of a division. There is a division officer in charge. The division officer is responsible for training personnel within the division. He/she makes sure that command policies are carried out. The division officer is responsible for seeing that the jobs assigned to the division are completed on time. You will probably be assigned to a smaller group called a *crew*. A senior petty officer is in charge of the crew. These petty officers will help you with your on-the-job and in-service training.

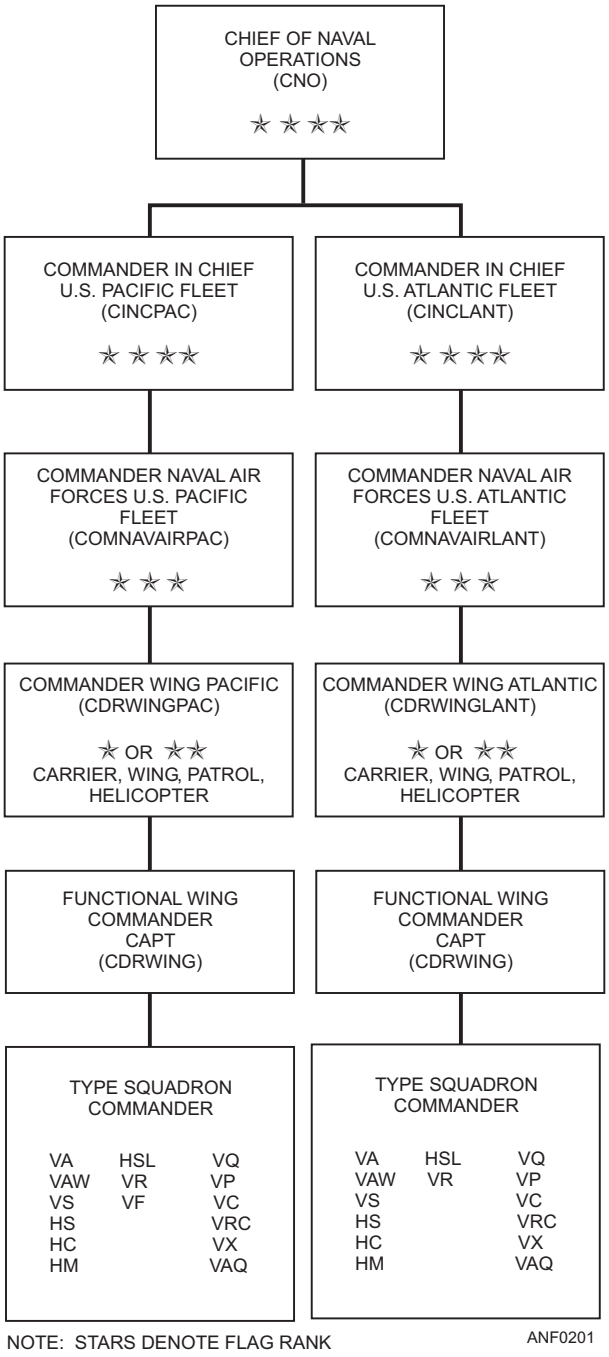

Figure 2-1.—Organizational chart of naval aviation.

NAVAL AVIATION CHAIN OF COMMAND

LEARNING OBJECTIVE: Recognize the naval aviation chain of command and your position within the chain.

Every organization in the Navy has a chain of command. Figure 2-1 shows a typical chain of command. The commanding officer of a squadron or ship must report to a superior officer. That superior officer must report to a superior, and this procedure is repeated all the way up to the CNO. You have a chain of command to follow. You report to your crew leader or supervisor. The crew leader or supervisor reports to the

branch or division chief petty officer. The branch or division chief reports to the division officer. Normally, all matters concerning you are handled at the division level. Matters of extreme importance should go to your department head. From the department head, the chain goes to the executive officer, and finally to the commanding officer. This chain of command could change some from command to command, but basically it will remain the same.

The chain of command serves many purposes in the accomplishment of the Navy's mission. The chain of command provides direction in the assignment of duties. Communication is the key word in the chain of command. Communication must flow in both directions, up and down the chain of command. A good chain of command provides a way to solve work-related problems.

Q2-1. What is the purpose of the chain of command?

NAVAL AIR STATION (NAS) ORGANIZATION

LEARNING OBJECTIVE: Identify the organizational structure of a naval air station and recognize the responsibilities within the organizational structure of these activities.

There are several activities devoted to naval aviation. Certain stations provide facilities for equipping, supplying, repairing, and maintaining aircraft. Others provide specialized training to flight and ground personnel.

You have already had duty at the Recruit Training Command. In this section, you will learn about the basic organization of a naval air station that you will see during your naval career. It should show you that there are many duties to be performed. You can strike for any one of the aviation ratings found on a naval air station. The organization of a naval air station is similar to that of a squadron or a carrier, but it is much more extensive.

The mission of a naval air station is to provide service and support to the fleet. A naval air station carries out its mission through several functions.

- It supports operating aircraft and squadrons assigned to the naval air station.
- It also supports any transient aircraft that land at the naval air station.
- It provides air traffic control to all aircraft flying in its controlled air space.

Naval air station and squadron personnel perform organizational-level maintenance on their assigned aircraft. The naval air station also has the responsibility for providing intermediate-level maintenance. This is a higher level of maintenance work done on aircraft. Some naval air stations provide depot-level maintenance. This is the highest level of maintenance for naval aircraft.

Providing training is another function of a naval air station. Some naval air stations provide one or more types of flight training. There are three types of flight training—preflight, basic, and advanced flight training. These three types of flight training apply to naval officer aviators and to enlisted aircrew personnel.

Some naval air stations provide the Fleet Readiness/Replacement Aviation Maintenance Program (FRAMP). FRAMP provides formal and on the job (OJT) maintenance training for the type of aircraft and the support equipment used on that aircraft.

Not all naval air stations do everything you will read about here. Some can handle all phases of training. Others may handle only the maintenance phase. The size of naval air stations varies according to their functions. However, all naval air stations provide service and support to the fleet.

Figure 2-2 shows the organization of a typical naval air station. The commanding officer (CO) is responsible for the safety, well-being, and efficiency of the command.

The commanding officer and executive officer have several special assistants. They are the legal officer, the service information officer, the chaplain, the aviation safety officer, the management engineer, and the general safety officer.

ADMINISTRATION DEPARTMENT

The administration department is responsible for providing administrative services for the station. These services include mail distribution, communications, and maintenance of personnel files. The divisions within the administration department include the administrative, communications, personnel administrative support services (PASS), mess, special services, and family services divisions.

COMPTROLLER DEPARTMENT

The head of the comptroller department assists the commanding officer and the executive officer. He/she advises the station budget board, the department heads,

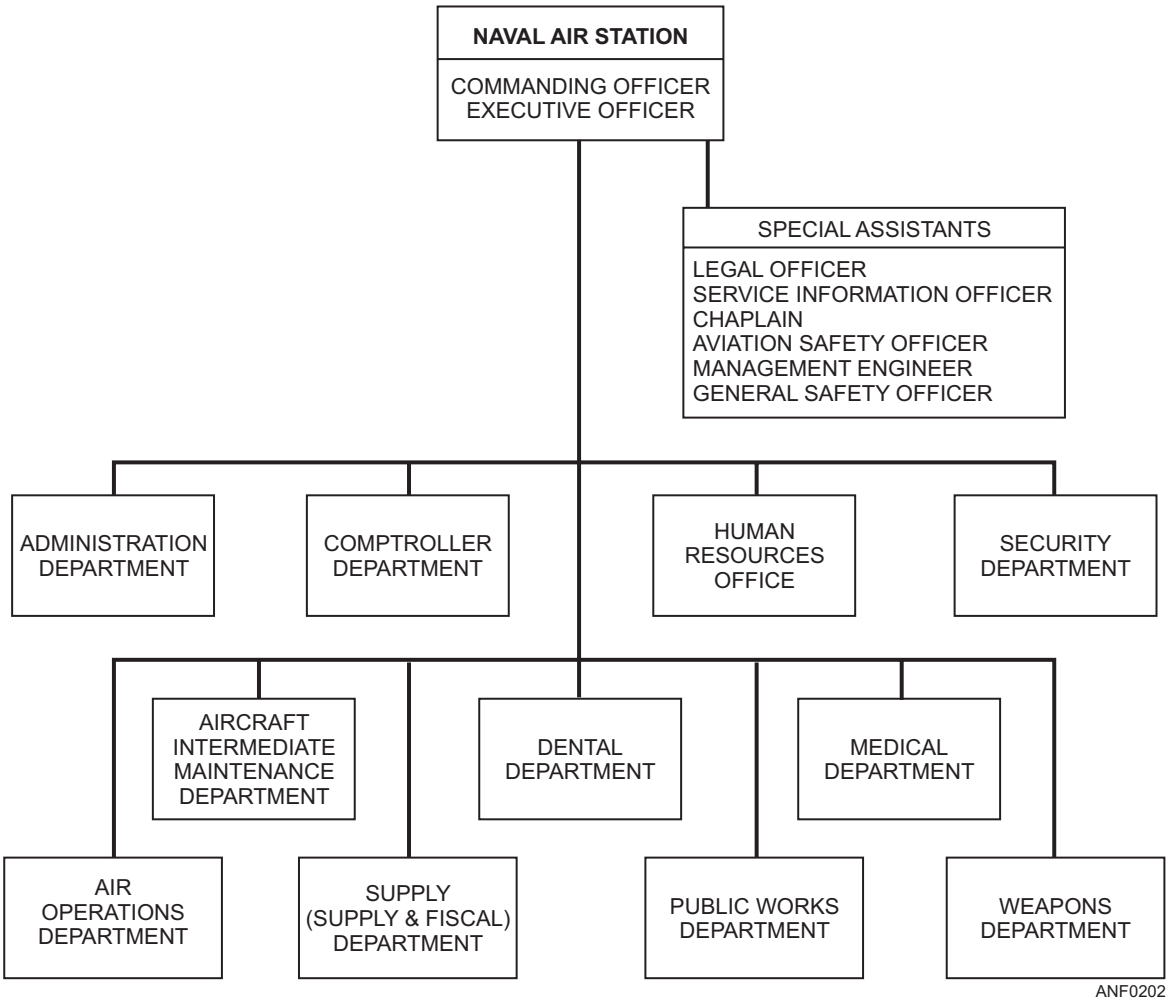

Figure 2-2.—Organizational chart of a naval air station.

and other levels of station management. The comptroller assists in planning, organizing, directing, and executing financial matters that affect the station. In this capacity, the comptroller provides technical guidance, coordination, and advice in budget control. He/she recommends allocations of civilian personnel to departments and programs. The comptroller develops and monitors data collection systems for program performance analysis and progress reporting. He/she also provides accounting and disbursing services.

HUMAN RESOURCES OFFICE (HRO)

The human resources office is headed by a naval officer or a civilian personnel officer. He/she is assisted by civilian experts on employment, wage, and classification. Employee relations and services are also handled in this office.

SECURITY DEPARTMENT

The security department consists of the police guard or marine guard, shore patrol, fire, brig, and administrative divisions. The department is responsible for maintaining the security of the station to prevent sabotage, espionage, theft, fire, or other hostile acts. The functions of the department include internal security, investigation, training, and coordination for off-station shore patrol activity.

AIR OPERATIONS DEPARTMENT

The air operations department is responsible for providing and operating the airfield. This department provides services to support aircraft operations, which include station, squadron, and transient aircraft (both military and civilian) support. The air operations department is also responsible for providing air traffic control in the air facility assigned to them. They collect, analyze, and report weather data, schedule flights, and update other important information. The department performs organizational maintenance for assigned aircraft, performs flight line services for transient aircraft, and operates firing ranges. Other services provided by the air operations department include ground electronics maintenance, photographic, and administrative functions within the department.

NOTE: The aircraft maintenance division is responsible for organizational-level maintenance of assigned and transient aircraft. The organization of this division is similar to that of a squadron, which is discussed later in this chapter.

SUPPLY DEPARTMENT

The supply department is headed by the senior supply corps officer. The department is responsible for the logistic support of the naval air station and all activities on the station. The supply officer and assistants have the responsibility for issuing all fuel and oils. Responsibilities extend to issuing aircraft parts and support equipment. The supply department also operates the general mess.

PUBLIC WORKS DEPARTMENT

The public works department is headed by a civil engineer corps officer. The officer in this position is responsible for the minor construction, maintenance, and operation of all public works and utilities. This department consists of utilities, maintenance, transportation, engineering, maintenance control, and administrative divisions. The department is staffed by both naval and civilian personnel.

WEAPONS DEPARTMENT

The weapons department is headed by a weapons officer. The department is responsible for the care, handling, stowage, accountability, and issuance of aviation ordnance, ammunition, and pyrotechnics. The department is also responsible for the maintenance of magazines, armories, and the equipment associated with ordnance.

DENTAL DEPARTMENT

The dental department is responsible for the oral health of all station military personnel. The senior dental officer performs dental examinations and does other dental work. He/she is assisted by dental officers and dental technicians.

MEDICAL DEPARTMENT

The medical officer is responsible for all health-related problems on the base. This includes prevention and control of disease and treatment of the sick or injured. The medical officer is informed of all matters regarding hygiene, sanitation, and epidemics. The medical officer also advises the commanding officer in matters affecting the health and physical fitness of personnel. A flight surgeon, under the direction of the medical officer, takes care of all aviation medicine. The medical department is also responsible for the medical care of dependents of military personnel.

AIRCRAFT INTERMEDIATE MAINTENANCE DEPARTMENT (AIMD)

The primary function of the aircraft intermediate maintenance department (AIMD) is to perform intermediate-level maintenance. It supports station aircraft, tenant squadrons, and special units.

NOTE: Naval aircraft maintenance is divided into three levels—organizational, intermediate, and depot. **Organizational maintenance** is work performed by operating units, such as a squadron, on a day-to-day basis. This work consists of inspecting, servicing, lubricating, adjusting, and replacing parts, minor assemblies, and subassemblies. **Intermediate maintenance** is work performed at centrally located facilities, such as an AIMD, in support of operating units. This work consists of calibration, repair, or replacement of damaged or unserviceable parts, components, or assemblies; limited manufacture of parts; and technical assistance. **Depot maintenance** is performed at large industrial-type facilities, such as a Naval Aviation Depot (NADEP), and includes major overhaul and major repair or modifications of aircraft, components, and equipment, and the manufacture of parts.

The aircraft intermediate maintenance department is broken down into divisions, as shown in figure 2-3. A brief description of each is provided in the following paragraphs.

Quality Assurance/Analysis (QA/A)

QA/A is staffed with a relatively small group of highly skilled personnel. These permanently assigned personnel are responsible for conducting and managing the QA/A programs of the department. The maintenance personnel assigned to QA/A are known as quality assurance representatives (QARs). A data analyst is assigned to QA/A. His/her purpose is to get more efficient use of the information collected by the aviation maintenance data system (MDS). The primary duty of the data analyst is to perform all MDS functions of QA/A. The QA/A division also maintains the technical library.

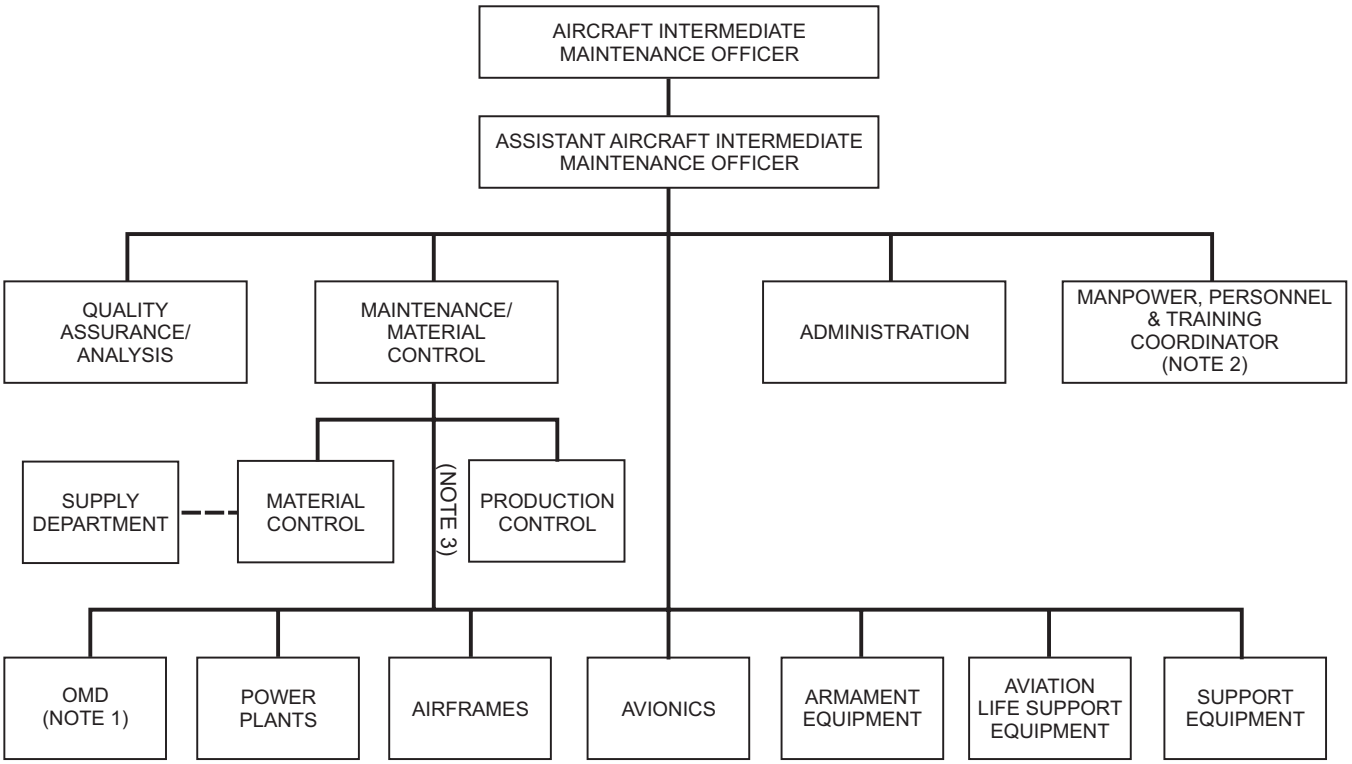

Breakdown beyond the basic divisions are not illustrated because of the variety of branches possible. Activities will be required to establish the necessary branches in accordance with their individual requirements. Volume V, Appendix D will be used as a guide to establish branches/work centers within the respective divisions. Branches should be established only when more than one work center is involved, for example, Jet Engine Branch with work centers forJ79 engine and J52 engine.

NOTE 1: When specific authority has been granted to combine the operations maintenance division (OMD) and IMA, an organizational maintenance division will be established.

NOTE 2: For AIMDs not large enough to rate the E-9 billet associated with this function, and in those cases where full E-9 and E-8 manning is not available, this separate organizational position is not required.

Anf0203

NOTE 3: Direct authority for production matters only.

Figure 2-3.—Aircraft intermediate-level maintenance department (ashore) organizational chart.

The QA concept is basically that of preventing defects. The concept takes in all events from the start of the maintenance operation to its completion. Quality assurance is the responsibility of **all maintenance personnel**. The achievement of QA depends on prevention, knowledge, and special skills.

Administration Division

The administration division provides clerical and administrative services for the AIMD department. The administration division maintains, controls, and establishes a central reporting and record-keeping file system for all maintenance reports and correspondence. The safeguarding and distributing of personal mail to department personnel is another function of the administration division.

Manpower, Personnel, and Training Coordinator

The manpower, personnel, and training coordinator will normally be a senior enlisted (E-9) person. The coordinator ensures that all divisions in AIMD are conducting training sessions to improve the quality of performance. He/she also ensures promotional opportunities are available for the assigned personnel. The coordinator directs periodic inspections of assigned work spaces and personnel.

Maintenance Material Control

Maintenance material control is the heart of the AIMD. It is tasked with the accomplishment of the overall production effort. It is responsible for repairing aircraft and related support equipment at the intermediate level of maintenance. There are two control centers under maintenance material control—production control and material control.

PRODUCTION CONTROL.—Production control schedules workloads and coordinates production. It ensures the efficient movement of all aircraft or parts through the AIMD activity. Production control ensures maximum use of personnel and material resources. Production control has many functions in an AIMD, but its main responsibility is to manage resources efficiently.

MATERIAL CONTROL.—Material control within a maintenance organization is responsible for parts and material used in the activity. Material control ensures that parts and materials are ordered and received. Once parts or material are received, they are routed to the applicable work centers and are not allowed to accumulate.

Supply

The supply support center (SSC) of an AIMD is responsible for receiving all parts and materials ordered. SSC prepares the requisitions and picks up and delivers the material to the various AIMD work centers. If maintenance is being performed 24 hours a day, the supply support center will be open 24 hours a day. This allows for a quick response to the work centers' material needs.

Organizational/Operations Maintenance Division (OMD)

An **o**rganizational **m**aintenance division (OMD) is normally established in an AIMD. Specific authority has to be granted to combine the organizational maintenance divisions and the intermediate maintenance activities on board a naval air station. Not all AIMDs will have an organizational maintenance division. An operations maintenance division is normally established when there is four or less aircraft assigned. OMDs on board a naval air station are responsible for all organizational-level maintenance that must be performed to their assigned aircraft.

Power Plants Division

The power plants division performs all of the three-degree gas turbine engine repairs. The three-degree repair program is divided into first-degree repair, second-degree repair, and third-degree repair. The program covers all gas turbine engines, their accessories, and components. This includes aircraft engines, auxiliary power units, and airborne or ground starting units.

Airframes Division

The airframes division has responsibilities associated with the Hydraulic Fluid Contamination Control Program. The division fabricates and tests hoses, tubes, and sheet metal parts for aircraft structural components. The division is responsible for the recertification of aeronautical equipment welders. The division is responsible for nondestructive inspection (NDI), aircraft tire/wheel maintenance safety, and corrosion prevention/control programs.

Avionics Division

The avionics division tests and repairs electrical and electronics system components. The division is responsible for calibration of precision measuring equipment (PME) and for ensuring that personnel performing calibrations are qualified and trained. Corrosion prevention/control of avionics equipment, maintenance, and the safety of aircraft batteries are also the responsibility of the avionics division.

Armament Equipment Division

The armament equipment division is responsible for testing and repairing airborne weapon systems. This includes calibrations, cleaning, corrosion control, preservation, and storage programs.

Aviation Life Support Equipment Division

The aviation life support equipment division is responsible for the Aviator's Breathing Oxygen (ABO) program, which includes surveillance, contamination, and handling. The division is responsible for the maintenance of the egress, air-conditioning, and pressurization systems. Survival equipment for the aircraft and aircrew is another function of the division's responsibilities.

Support Equipment (SE) Division

The SE division supplies aircraft support equipment to all organizational-level activities on the naval air station. This division performs major repair and periodic inspection and maintenance of all aviation support equipment.

NOTE: Aviation support equipment includes, but is not limited to, such items as test stands, workstands, mobile electric power plants, pneumatic and hydraulic servicing equipment, and avionics test equipment.

Q2-2. What is the primary mission of a naval air station?

Q2-3. What officer is responsible for the safety, well being, and efficiency of the command?

Q2-4. On a naval air station, what department is responsible for providing and operating the airfield?

Q2-5. What are three primary responsibilities of the supply department?

Q2-6. What are the three levels of aircraft maintenance?

Q2-7. What is the basic concept of quality assurance (QA)?

Q2-8. What are the two control centers in the maintenance material control division?

Q2-9. What division performs all of the three-degree gas turbine engine repairs?

NAVAL AIR FACILITIES AND NAVAL AVIATION DEPOTS

LEARNING OBJECTIVE: Identify the functions of naval air facilities and naval aviation depots.

A **naval air facility** (**NAF**) performs maintenance functions on aircraft and support equipment assigned to that command. These functions sometimes include organizational- and intermediate-level maintenance. Naval air facilities are normally smaller than a naval air station. Naval air facilities are **not** equipped to handle large numbers of aircraft.

A **naval aviation depot** (**NADEP**) maintains and operates facilities for a complete range of depot-level rework operations to include designated weapons systems, accessories, and equipment. The depot manufactures parts and assemblies as required. It also provides engineering services in the development of changes to hardware design. The depot furnishes technical and other professional services on aircraft maintenance and logistic problems. They also perform other levels of aircraft maintenance for eligible activities when requested. The facility performs other functions as the Commander, Naval Air Systems Command may direct.

Q2-10. In what respect does a naval air facility (NAF) differ from a naval air station?

SQUADRONS

LEARNING OBJECTIVE: Identify the four basic types of squadrons, to include the organization within the squadron and the squadron mission; and recognize the responsibilities of squadron personnel and identify the function of squadron departments.

Squadrons are designated by the purpose they serve. You should be familiar with the various types, classes, and missions of each type of squadron.

TYPES OF SQUADRONS

There are four basic types of squadrons—carrier, patrol, composite, and noncombatant. In this section, you will learn about squadron missions and the primary aircraft that operates within a specific squadron.

Carrier Squadrons

There are five types of carrier squadrons. They are fighter, attack, strike/fighter, antisubmarine, and airborne early-warning squadrons.

Fighter squadrons (VFs) are used against aircraft and ground installations to defend surface units. They escort attack aircraft, and give close air support to landing forces. These squadrons combine maximum firepower and speed. The F-14 *Tomcat* is the primary aircraft assigned to a fighter squadron.

Attack squadrons (VAs) are employed for various missions including enemy attack, search, bombing, mining, and torpedo warfare. Aircraft assigned to an attack squadron may be the multipurpose F-18 *Hornet.*

Strike fighter squadrons (VFAs) are employed for both fighter and attack missions. The F/A-18 *Hornet* aircraft are assigned to strike fighter squadrons.

Antisubmarine squadrons (VS, HS, and HSL) include both fixed-wing aircraft (VS) and helicopters (HS and HSL). Their primary mission includes

Antisubmarine Warfare (ASW) search and attack of enemy submarines, supply convoy coverage, and antisurface surveillance and targeting. Their secondary mission provides search and rescue (SAR), vertical replenishment (VERREP), and medical evacuation (MEDIVAC). Aircraft assigned to a VS squadron include the S-3 *Viking*. Helicopters assigned to HS squadrons include the SH-60 *Sea Hawk* Mk III, which includes the Light Airborne Multipurpose System (LAMPS).

Airborne early-warning squadrons (VAWs) are carrier-based squadrons that provide early warning against submarines, weather, missiles, shipping, and aircraft. Aircraft assigned to an early-warning squadron include the E-2 *Hawkeye*.

Patrol Squadrons

Patrol squadrons (VPs) consist of aircraft that are land based and operate singly over land and sea areas. These squadrons are designed primarily for antisubmarine warfare (ASW), reconnaissance, and mining. Aircraft assigned to a patrol squadron include the P-3 *Orion.*

Composite Squadrons

Composite (utility) squadrons (VC and HC) include both fixed-wing aircraft (VC) and helicopters (HC). VC squadrons perform duties such as adversary, simulation, and target towing. HC squadrons perform duties such as ship's plane-guard, search and rescue (SAR), medical evacuation (MEDIVAC), vertical replenishment (VETREP), cargo and mail delivery, and troop and personnel transfer. Aircraft assigned to utility squadrons include the A-4 *SkyHawk*, SH-3 *Sea King*, H-46 *Sea Knight*, or the H-53 *Sea Stallion*.

Noncombatant Squadrons

There are three types of noncombatant squadrons. They are the development, tactical, and training squadrons.

Development squadrons include both fixed-wing aircraft (VX) and rotary-wing aircraft (helicopters) (HX). The mission of a development squadron is to test and evaluate fixed-wing and rotary-wing aircraft and their equipment. This type of squadron closes the gap between the experimental stages and the operational use of the new aircraft and its equipment. All types of aircraft that require testing and evaluation are assigned to these squadrons.

Tactical support squadrons (VRs and VRCs) provide for long-distance transfer of personnel and supplies (logistic support). Aircraft assigned to a tactical support squadron include the C-130 *Hercules*, C-9 *Skytrain*, C-2 *Greyhound*, and VS-3 *Viking*.

Training squadrons are designated VT and HT. The mission of a training squadron is to provide basic, advanced, operational, and refresher-type flight training. They cover both fixed-wing and rotary-wing aircraft. Some aircraft assigned to a training squadron include the, T-2 *Buckeye*, T-34 *Mentor*, C-12 *Kingair*, T-45 *Goshawk*, and various training helicopters.

ORGANIZATION OF A SQUADRON

The operating squadrons have a commanding officer assisted by an executive officer, department heads, division officers, maintenance officers, and enlisted personnel. You should know the organization of your squadron. Recognize your commanding officer and display the courtesy required by military etiquette. Know your division officer and your responsibilities to that position. Know your chief petty officers and other rated personnel in your division. They should be your biggest help in your professional advancement. Know your part in your own organization. Now, let's take a look at a typical squadron organization, starting with the commanding officer.

Commanding Officer (CO)

The CO is the senior naval officer in the squadron. He/she is known as the squadron commander. The commanding officer has the duties and responsibilities as outlined in *U.S. Navy Regulations*. These duties and responsibilities include morale, discipline, readiness, and efficiency. The CO issues operational and employment orders to the entire squadron. The executive officer, department heads, and other officers and personnel fall under the commanding officer. See figure 2-4. The commanding officer is responsible for the operational readiness of the squadron.

The squadron safety officer works directly under the commanding officer. The safety officer's responsibility is to ensure the squadron follows all pertinent safety orders. The squadron safety officer is a member of the squadron aircraft accident board. He/she serves as crash investigator of all crashes occurring within the squadron.

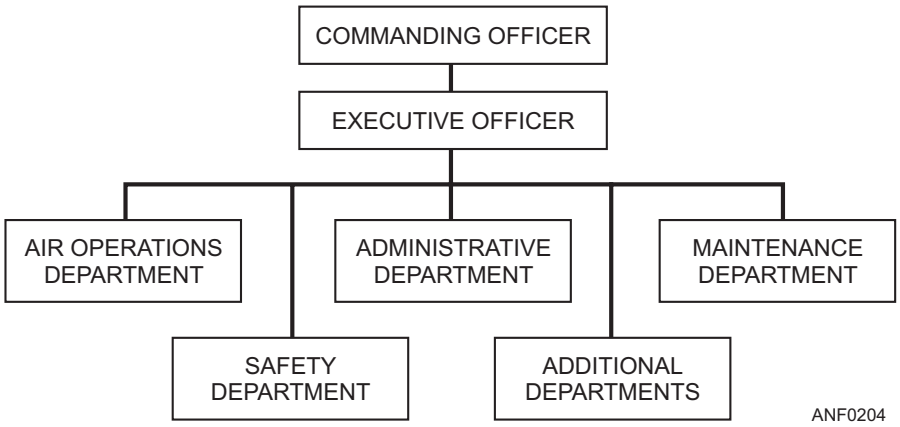

Figure 2-4.—Typical aircraft squadron organizational chart.

Executive Officer (XO)

The XO is the second senior naval aviator in the squadron. He/she is the direct representative of the CO, whose duties are prescribed in *U.S. Navy Regulations*. The XO is assisted by various department heads, whose duties vary according to their designated mission and tasks. The executive officer assures that the squadron is administered properly and the squadron commander's orders are carried out.

Maintenance Officer (MO)

The MO has administrative control over the maintenance department and is responsible to the CO for accomplishing the squadron mission. The maintenance officer establishes procedures and delegates authority to subordinates. The MO reviews the decisions and actions of subordinates and controls personnel assigned to divisions within the department. The MO is assisted by the assistant maintenance officer (AMO).

Maintenance Material Control Officer (MMCO)

This officer is responsible for the production effort of the department. The maintenance material control officer (MMCO) plans, schedules, and supervises all activities of the production divisions. The MMCO is responsible for obtaining all supplies needed to support the squadron workload and keeping related records.

Aircraft Squadron Departments

All aircraft squadrons have an administrative department and a safety department. Most squadrons also have an operations department and a maintenance department. Some squadrons have one or more departments in addition to the four already mentioned. Based upon the mission of the squadron, there may be a training, photographic, or intelligence department. A department head reports to the commanding officer, and is responsible for the operational readiness of the department. Department heads are responsible for organizing and training within the department. Operation, planning, security, safety, cleanliness of areas assigned, and records and reports are some of the department head responsibilities.

OPERATIONS DEPARTMENT.—The operations department (OPS) is responsible for the operational readiness and tactical efficiency of the squadron. Normally, the operations department consists of the logs and records, schedules, training, communications, and navigation divisions.

ADMINISTRATIVE DEPARTMENT.—The administrative department (ADMIN) is responsible for all the administrative duties within the squadron. This department takes care of official correspondence, personnel records, and directives. The personnel office, educational services office, public affairs office, and legal office are all part of the administrative department. The first lieutenant and command career counselor work as members of this department.

SAFETY DEPARTMENT.—The safety department is responsible for all matters concerning the squadron's safety program. Generally, this department is divided into the ground safety, aviation safety, and NATOPS divisions. The NATOPS division is responsible for ensuring that standardized procedures are followed in operating the squadron's aircraft.

MAINTENANCE DEPARTMENT.—The maintenance department is responsible for the overall maintenance of the squadron's aircraft. The maintenance department is usually divided into six areas. They are maintenance/material control, quality assurance/analysis, maintenance administration,

aircraft, avionics/armament, and line divisions. See figure 2-5.

Maintenance Administration.—This section provides administrative and clerical services for the aircraft maintenance department.

Quality Assurance/Analysis.—The quality assurance/analysis (QA/A) section inspects the work of the maintenance department. QA/A ensures that maintenance performed on aircraft, engines, accessories, and equipment is done according to current Navy standards.

The quality analysis (QA) section collects and reviews maintenance data. QA collects source documents prepared by shop personnel and delivers the documents to data processing for computer input. The analysis petty officer receives the results from machine-produced reports. The reports are used to develop statistical charts, graphs, and reports, which the maintenance officer and other management personnel use.

Maintenance Control.—Maintenance control is the heart of the aircraft maintenance department. Maintenance control is responsible for planning and scheduling the daily, weekly, and monthly workloads for the entire maintenance department.

Material Control.—Material control is responsible for ordering and receiving all aircraft parts and materials needed to support the maintenance department. Material control is also responsible for keeping the records involved in obtaining such material.

Types of Divisions

There are four basic types of divisions within a squadron. They are the target, aircraft, avionics/armament, and line divisions.

TARGET DIVISION.—The CO establishes a target division when extensive operation and maintenance of aerial or surface targets are needed.

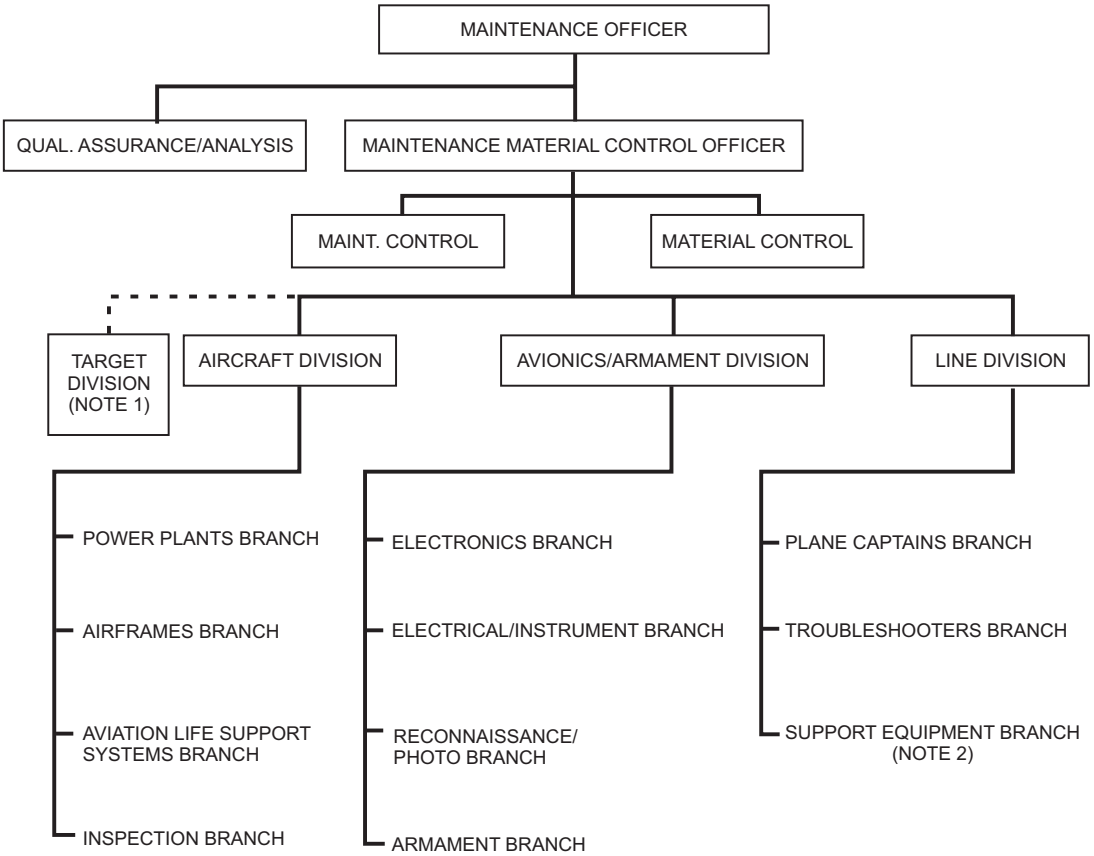

NOTE 1: When responsibilities relative to the operation and maintenance of aerial or surface targets are extensive, the CO will establish a Target Division.

NOTE 2: When responsibilities relative to operation and maintenance of SE are extensive, the CO will establish an SE Branch under the line division.

ANF0205

Figure 2-5.—Squadron aircraft maintenance department organizational chart.

AIRCRAFT DIVISION.—The aircraft division supervises, coordinates, and completes scheduled and unscheduled maintenance. It also performs inspections in the areas of power plants, airframes, and aircrew personnel protective/survival equipment. The aircraft production branches are located within the aircraft division. They are the power plants, airframes, aviation life support equipment, and inspection branches.

AVIONICS/ARMAMENT DIVISION.—The avionics/armament division maintains the electronic, electrical instrument, fire control, reconnaissance/photo, and ordnance portion of the aircraft.

The avionics/armament production branches are located within the avionics/armament division. They are the electronics, electrical/instrument, reconnaissance/photo, and armament branches.

LINE DIVISION.—The line division performs scheduled and unscheduled maintenance work on the aircraft. This responsibility includes preflight, turnaround, daily and post-flight inspections, servicing as well as troubleshooting discrepancies.

The correction of aircraft discrepancies occurs on the line, providing the job does not require the removal of major assemblies. The ground handling of the squadron's aircraft is a function of the line division. The plane captain assignment/qualification program is administered by and is a responsibility of the line division.

The line division is responsible for the squadrons support equipment. This includes preoperation, postoperation, and daily inspections, as well as servicing and maintenance of the support equipment. Daily maintenance requirements cards (MRCs) are provided for each major type of support equipment used by the squadron. The MRCs set forth the minimum daily inspection required for each piece of support equipment.

The foreign object damage (FOD) prevention, fuel, oil, hydraulic fluid and oxygen surveillance programs are the responsibility of the line division.

The plane captains, troubleshooters, and support equipment branches are located within the line division.

Q2-11. What are the four basic types of squadrons?

Q2-12. What are the five types of carrier squadrons?

Q2-13. What are the three types of noncombatant squadrons?

Q2-14. What types of aircraft are assigned to a development squadron?

Q2-15. What is the primary mission of a tactical support squadron?

Q2-16. What officer is responsible for the operational readiness of a squadron?

Q2-17. What officer plans, schedules, and supervises all activities of the production divisions?

Q2-18. What are the four basic departments that make up an aircraft squadron?

Q2-19. What are the four basic types of divisions within a squadron?

AIRCRAFT CARRIER ORGANIZATION

LEARNING OBJECTIVE: Identify the purpose of the aircraft carrier and recognize its organization; recognize the function of the various organizations on an aircraft carrier.

The purpose of aircraft carriers is to maintain the aircraft at sea. Their operation is mobile and independent of land facilities. These operations include naval air defensive and offensive missions. The types of aircraft aboard a carrier vary from turboprop aircraft to high-performance jets. To maintain and operate these aircraft, carriers are equipped with many well-known special features. These features include the flight deck, hangar deck, elevators, arresting gear, and catapult systems.

You should know something of the organization of the carrier to better understand your relationship to the carrier's mission. You should also recognize the commanding officer of your carrier and know something about the responsibilities of that position. In addition to being a line officer qualified for command at sea, the commanding officer must be a naval aviator. The commanding officer is directly responsible for the ship's efficient performance of assigned tactical duties. The commanding officer is also responsible for the personnel assigned to his command. Responsibilities include welfare, morale, training, discipline, military etiquette, customs, and daily routines. Commanding officers have duties that are so extensive they cannot

personally attend to all the details involved. Figure 2-6 shows the standard aircraft carrier organization.

The executive officer aboard a carrier assists the captain the same as the executive officer of a squadron helps the squadron's commanding officer. The executive officer, the operations officer, and the air officer also must be qualified naval aviators.

CARRIER AIR WING

Carrier air wings consist of squadrons assigned by the Chief of Naval Operations (CNO). The air wing is under the command of an air wing commander. Air wing commanders report for duty to the commanding officer of the parent carrier. They have tactical command of their wings during wing operations. When ship-based, the air wing commander exercises the rights conferred by *U.S. Navy Regulations* on heads of departments. The air wing commander also has responsibilities similar to that of a department head. These responsibilities include internal administration of air wing personnel and material upkeep of assigned spaces and aircraft. In matters concerning air department functions, the air wing commander acts under the direction of the air department officer. Under the direction of the operations officer, the commander cooperates in matters concerning operations department functions. Air wings, squadrons, and units are established aboard CV and CVN, LPH, LHA, and LHD types of ships. See figure 2-7.

Under the carrier commanding officer and the air wing commander, squadron commanding officers maintain the squadron organization. See figure 2-8.

OPERATIONS DEPARTMENT

The operations department has the responsibility of air operations and the combat information center (CIC). The allied divisions, including air intelligence, photography, meteorology, lookout, recognition, and air plot are added responsibilities. These sections make up the OA and OI divisions to which you, as a striker, may be assigned.

AIR DEPARTMENT

The carrier air department is organized into divisions that are responsible for landing and launching operations. They also handle and service aircraft, and

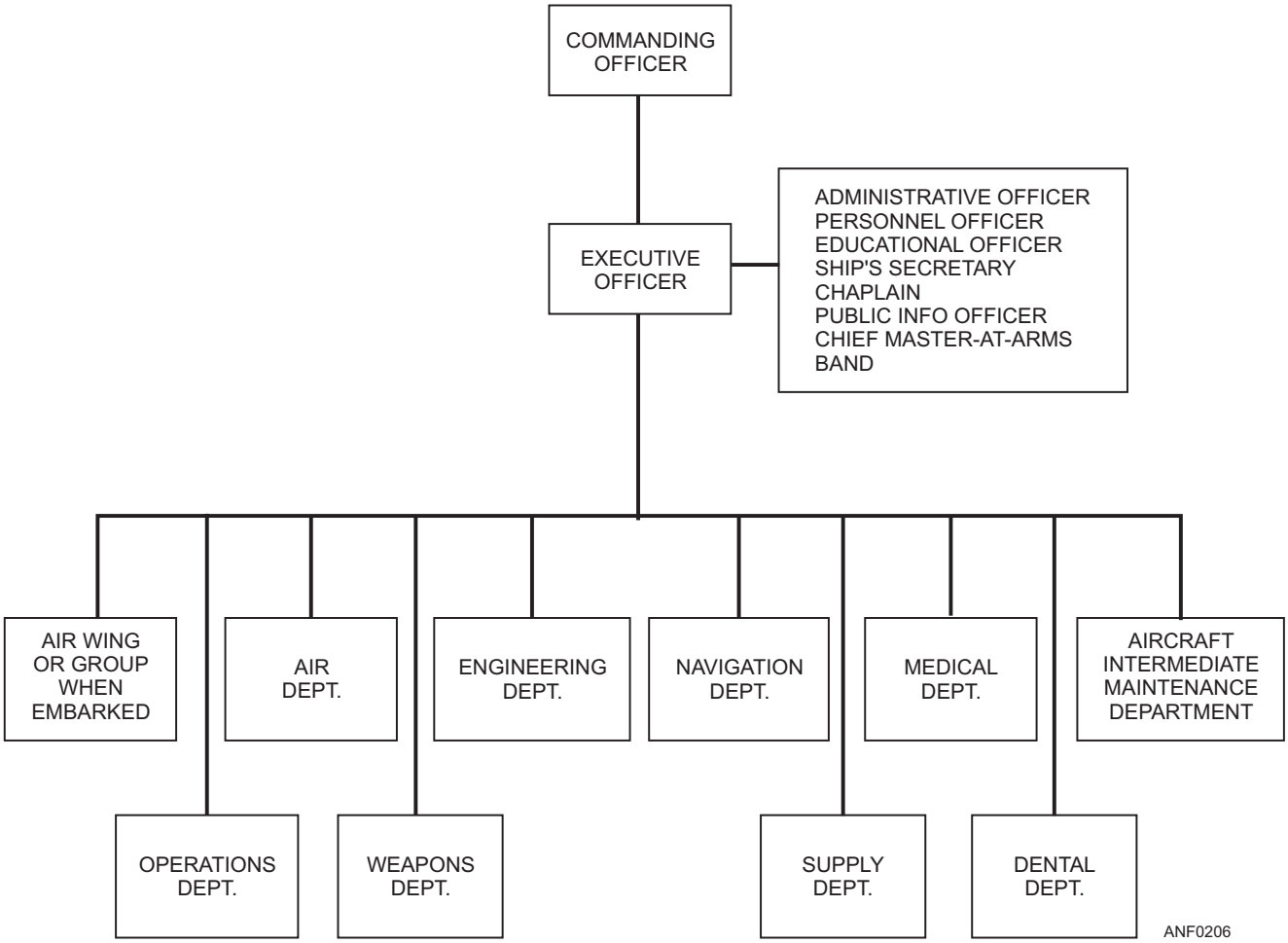

Figure 2-6.—Typical aircraft carrier organizational chart.

AIRCRAFT CARRIER (CV)

AMPHIBIOUS ASSAULT SHIP (LPH)

AMPHIBIOUS ASSAULT SHIP (LHA) ANF0207

Figure 2-7.—Typical aviation-type ships.

maintain the equipment necessary for these functions. Air department personnel are ship's company, and the department is a permanent shipboard activity.

Divisions within the air department may vary from ship to ship, but each one follows a broad general pattern. The maximum number of divisions is normally

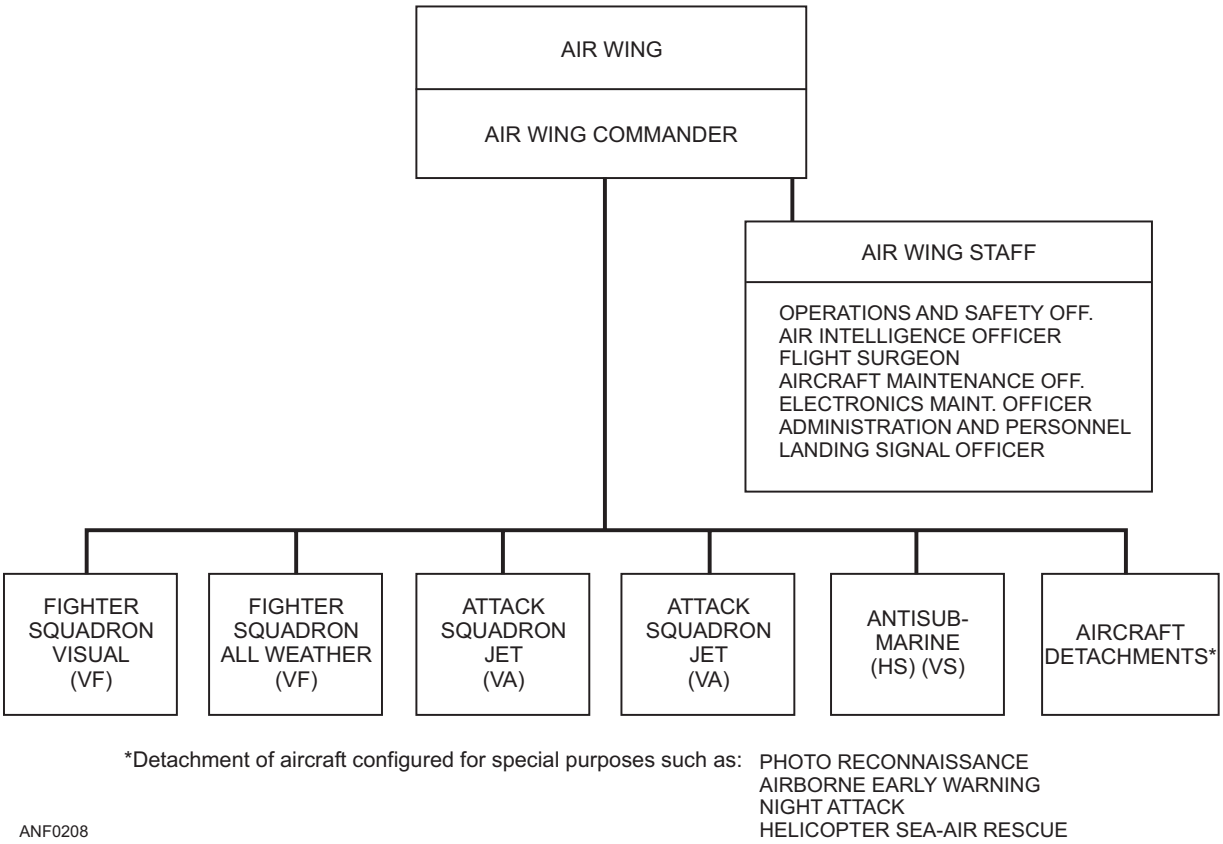

Figure 2-8.—Administrative organization of a typical CV air wing.

four in peacetime and seven in wartime. These are grouped according to the major functions of aircraft handling and aircraft maintenance. Division designation and responsible officers are shown in figure 2-9.

The principal duties and responsibilities of each division are discussed in the following paragraphs:

V-1 Division

The **flight deck division** is responsible for the handling of all aircraft on the flight deck. This includes

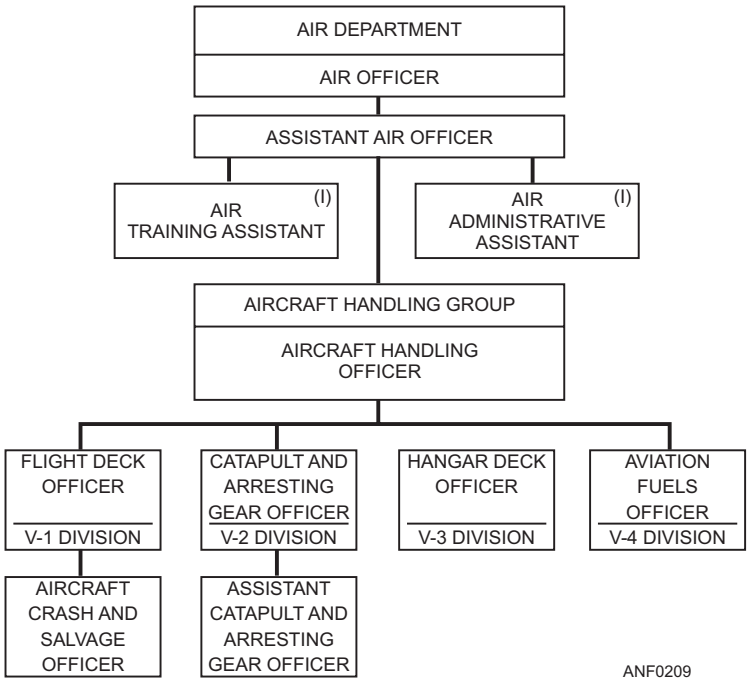

Figure 2-9.—Administrative organization of an air department.

spotting and directing aircraft and operating aircraft-handling equipment, such as tractors and cranes. Also included in this division is the aircraft crash, fire, and rescue party. This crew is under the direction of the aircraft crash and salvage officer. They are responsible for flight deck fire fighting, rescue, clearing flight deck crashes, and maintaining crash and fire-fighting equipment.

V-2 Division

Personnel in the **catapult and arresting gear division** are usually assigned to one of two crews. The catapult crew is charged with the operation and maintenance of all catapult machinery. The arresting gear crew is responsible for the operation and maintenance of the arresting gear and barricade equipment. Occasionally, the catapult and arresting gear crews assist in clearing flight deck crashes.

V-3 Division

The **hangar deck division** is charged with the handling of all aircraft on the hangar deck. Other responsibilities include operation of aircraft elevators, hangar bay doors, and roller curtains. They also maintain assigned fire-fighting equipment, such as sprinkler systems, water curtains, and foam monitors. Certain personnel from the V-3 division are assigned to the conflagration (fire) control stations on the hangar deck. Repair 1A (hangar deck forward) is operated by personnel from the V-3 division.

V-4 Division

The **aviation fuels division** is charged with the operation and upkeep of the carrier aviation fuel and lube oil transfer system. This also includes the inert gas producer and distribution systems (when installed). They service embarked aircraft with clean, uncontaminated fuel, and replenish the ship's supply of aviation fuel and lube oil.

WEAPONS DEPARTMENT

In general, the weapons department is responsible for the requisition, receipt, inspection, unpackage, inventory, account for, store, assemble and process for shipment of the following weapons: air/surface and sub-surface missiles, bombs, rockets, and components, including aircraft guns and accessories, ammunition handling equipment, and aircraft arming, suspension, launch and release equipment. The weapons department is also responsible for loading and fusing aviation ammunition, and maintaining shipboard weapons elevators, magazines, sprinkler systems, and ammunition storage facilities.

ENGINEERING DEPARTMENT

The engineering department is responsible for all machinery, propulsion, ventilation, water supply, piping systems, electrical systems, and electronic devices on board the ship.

NAVIGATION DEPARTMENT

The navigation department is responsible to the commanding officer for the safe navigation and piloting of the aircraft carrier. This department also trains deck watch officers, orders navigational equipment for the ship, and provides for its upkeep.

SUPPLY DEPARTMENT

The supply department handles such matters as ordering, receiving, storing, issuing, and accounting for all supplies needed for the ship's operation.

MEDICAL DEPARTMENT

The medical department is responsible for maintaining the health of all personnel and advising the commanding officer in matters of sanitation and hygiene.

DENTAL DEPARTMENT

The senior dental officer is responsible for the dental care and oral hygiene of the personnel aboard.

AIRCRAFT INTERMEDIATE MAINTENANCE DEPARTMENT (AFLOAT)

To improve fleet readiness, the Chief of Naval Operations established an aircraft intermediate maintenance department (AIMD) on aircraft carriers. The AIMD assumes the entire responsibility for the intermediate maintenance effort on the carrier. Therefore, relieving the air wing commander of the responsibility of providing O- and I-level maintenance for aircraft assigned.

AIMDs are organized in a manner similar to shore-based aviation maintenance departments. See

figure 2-10. Some personnel are permanently assigned to the AIMD, and some are temporarily assigned from the squadrons embarked on the carrier. The temporarily assigned personnel accompany their squadrons when the squadrons disembark to be based ashore.

Q2-20. In addition to being a line officer qualified for command at sea, the commanding officer of an aircraft carrier must have what other qualification?

Q2-21. In peacetime, what is the maximum number of divisions normally assigned to the air department?

Q2-22. What division is responsible for handling all aircraft on the flight deck?

Q2-23. What division is responsible for upkeep of the carrier aviation fuel and lube oil transfer system?

Q2-24. What department trains deck watch officers, orders navigational equipment for the ship, and provides for its upkeep?

Q2-25. What department on an aircraft carrier is entirely responsible for all intermediate-level aircraft maintenance?

CARRIER DIVISIONS

LEARNING OBJECTIVE: Recognize the broad purpose of the aircraft carrier within a Navy task force.

Now you know the basic organization of a carrier. This knowledge allows you to understand how your carrier fits in the total organization of the Navy. If more than one carrier is operating with a Navy task force, your carrier is a part of a carrier division (CARDIV). The commander of a carrier division is usually an admiral, who is assisted by a staff of highly qualified officers and administrative personnel.

The carrier division will be a part of either the Naval Air Force, U.S. Atlantic Fleet or the U.S. Pacific Fleet. A carrier division operating with the Atlantic Fleet will receive orders from the Commander, Naval Air Force, U.S. Atlantic Fleet (COMNAVAIRLANT). If the carrier operates with the Pacific forces, orders will come from the Commander, Naval Air Force, U.S. Pacific Fleet (COMNAVAIRPAC). COMNAVAIRLANT is directed by the Commander in Chief, U.S. Atlantic Fleet (CINCLANTFLT). COMNAVAIRPAC is directed by the Commander in Chief, U.S. Pacific Fleet (CINCPACFLT). CINCLANTFLT and

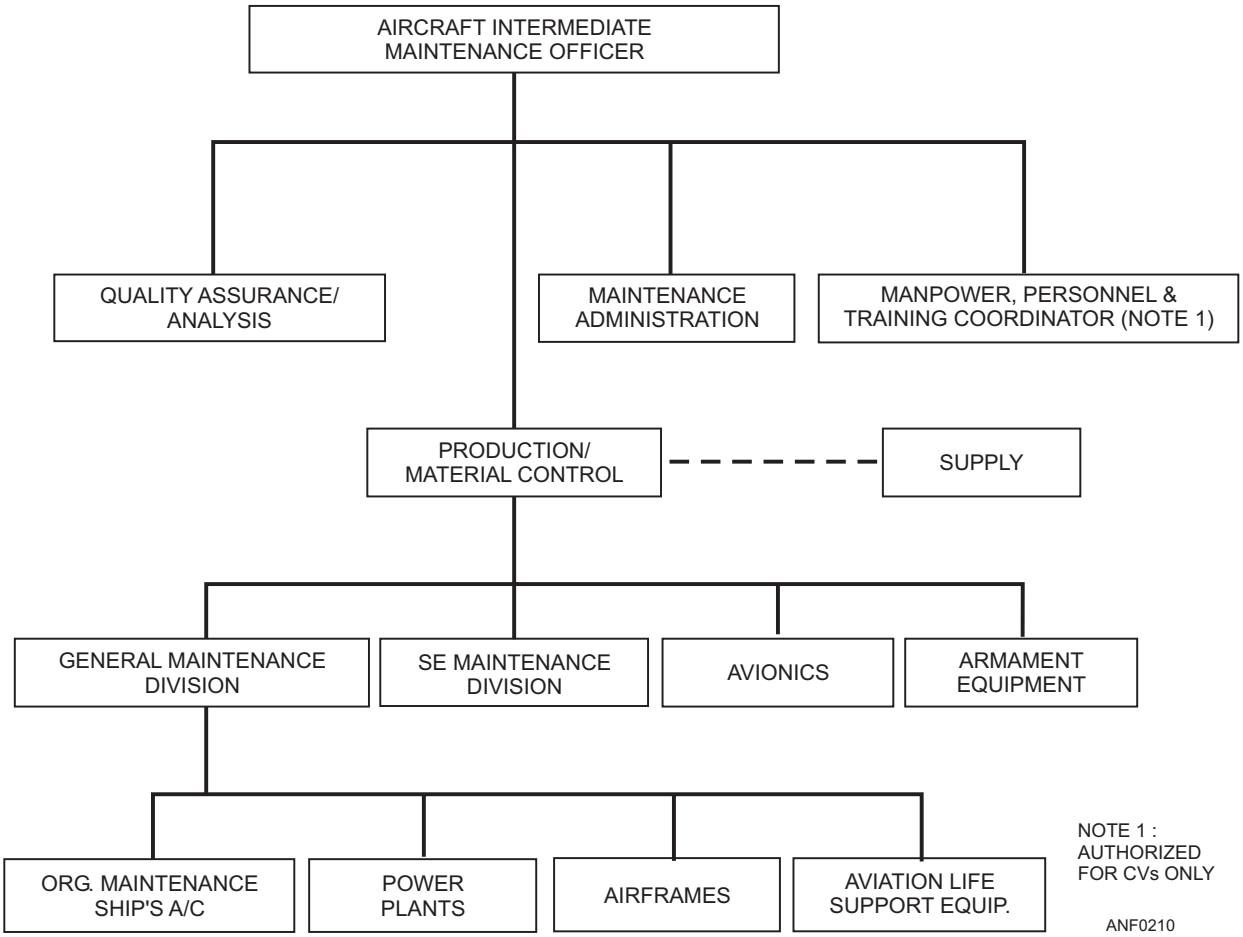

Figure 2-10.—Aircraft intermediate-level maintenance department (afloat) organizational chart.

CINCPACFLT are directly under the Chief of Naval Operations (CNO). The CNO is the Navy representative for the Joint Chiefs of Staff. They have the responsibility for the protection of the United States.

Q2-26. The commander of a carrier division is usually an officer of what rank?

Q2-27. Who is the Navy representative for the Joint Chiefs of Staff?

TYPICAL CARRIER SCHEDULE

LEARNING OBJECTIVE: Identify the purpose of the carrier schedule.

A carrier needs periodic repair and refitting. The time scheduled for this work is called a yard period. In a Navy shipyard, the carrier is repaired and any change or modernization is done. Included are rearrangement of compartments, repair of machinery, and installation of new systems. At this time, required supplies and spare parts are loaded aboard for both the carrier and its supported squadrons.

The carrier then takes several shakedown and training cruises. During the shakedown cruises, the carrier is checked for satisfactory operation of machinery, equipment, and systems. A return to the shipyard may be needed to correct discrepancies. During the training cruises, the squadron's and ship's personnel are trained in operations and procedures necessary to complete the ship's mission.

The carrier proceeds to its patrol area and conducts operations according to its mission. Supplies are provided by supply ships by underway replenishment (UNREP), carrier onboard delivery (COD) aircraft, or by vertical replenishment (VERTREP) helicopter squadron's. The carrier usually takes a breather one or more times during this deployment period. This break allows personnel to go on liberty in foreign countries, and bring supplies on board that are difficult to get at sea.

After the deployment period, the carrier returns to its homeport for refitting. Each return to home port does not involve a yard period. While the carrier is home ported, the squadrons that were aboard are based ashore. While the carrier is being refitted and re-supplied during home port periods, personnel are transferred and new personnel are trained. The carrier is now ready for deployment.

Q2-28. Define a "yard" period as it relates to an aircraft carrier.

Q2-29. How are aircraft carriers supplied with provisions during deployment?

DESIGNATION AND TYPES OF NAVAL AIRCRAFT

LEARNING OBJECTIVE: Identify naval aircraft designations and the major fleet aircraft.

The present system of designating naval aircraft was initiated in late 1962. This system applies to all U.S. military aircraft. All the aircraft designations have one thing in common—a hyphen. The letter just before the hyphen specifies the basic mission, or type, of aircraft. The basic mission letters are as follows:

A—Attack
B—Bomber
C—Transport
E—Special electronic installation
F—Fighter
H—Helicopter
K—Tanker
O—Observation
P—Patrol
R—Reconnaissance
S—Antisubmarine
T—Trainer
U—Utility
V—VTOL and STOL
X—Research

If the aircraft has been modified from its original mission, a letter in front of the basic mission letter indicates its modified mission. Mission modification letters are as follows:

A—Attack
C—Transport
D—Director (for controlling drone aircraft or missiles)
E—Special electronic installation
H—Search/rescue
K—Tanker
L—Cold-weather aircraft (for Arctic or Antarctic operations)
M—Mine countermeasures
O—Observation
P—Patrol
Q—Drone
R—Reconnaissance
S—Antisubmarine
T—Trainer
U—Utility
V—Staff
W—Weather

All the aircraft designations have one thing in common—a hyphen; for example, the F/A-18E *Hornet*

has a multipurpose role. The first letter(s) identify its mission. A number after the hyphen specifies the design number of the aircraft. A letter other than A (A being the original design) after the design number shows a change in the original design. For example, in F/A-18E, the F means fighter and A means attack aircraft. Its design number is 18, and it has been modified four times, represented by the E (fifth letter of the alphabet). Another example is the A-6A. When it is modified to perform early-warning missions, it then becomes the EA-6B *Prowler* because of the special electronic installation required for such missions.

If both the special-use letter and the modified mission letter apply to the same aircraft, the special-use letter comes first. For example, YEP-3E refers to a prototype (Y), early warning (E), patrol aircraft (P), design number 3, and the design has been modified four times.

Table 2-1 gives the basic mission, design number, manufacturer, and popular name of most naval aircraft.

Table 2-1.—Naval Aircraft Identification, Manufacturers and Names

BASIC MISSION AND DESIGN NUMBER	CONTRACTOR/ MANUFACTURER	POPULAR NAME
AV-8	McDonnell-Douglas	Harrier
C-2	Grumman	Greyhound
C-9	McDonnell-Douglas	Skytrain II
C-12	Beechcraft	Kingair
C-20	Gulfstream-Aerospace	Gulfstream
C-130	Lockheed	Hercules
E-2	Grumman	Hawkeye
E-6	Boeing	Mercury
EA-6	Grumman	Prowler
F-14	Grumman	Tomcat
F/A-18	McDonnell-Douglas	Hornet
P-3	Lockheed	Orion
S-3	Lockheed	Viking
T-2	North American	Buckeye
T-34	Beech	Mentor
T-45	McDonnell-Douglas	Goshawk
OV-10	North American	Bronco
HH-1	Bell	Iroquois/Huey
AH-1	Bell	Corbra
SH-2	Kaman	Seasprite
SH-3	Sikorsky	Sea King
CH-46	Boeing-Vertol	Sea Knight
H-57	Bell	Jet Ranger
SH-60	Sikorsky	Sea Hawk
RH-53	Sikorsky	Sea Stallion
V-22	Bell-Boeing	Osprey

The Navy has aircraft of each major type. This includes fighter, attack, patrol, and ASW that are far superior to those flown in the past. As you read the rest of this section, refer to figures 2-11 and 2-12, which show some of the aircraft currently in the Navy inventory. The Navy is constantly seeking better and more advanced aircraft operational capabilities. Manufacturers are aware of this and are constantly developing products to meet these demands. Some combat aircraft are described in the following paragraphs.

MCDONNELL-DOUGLAS HORNET, F/A-18

The F/A-18 is a twin-jet-engine aircraft designed for all-weather fighter escort and light attack. The *Hornet* is capable of catapult launch and arrested landings for carrier operations.

The crew consists of a pilot on the F/A-18 model aircraft, and a pilot and student on the TF/A-18 model aircraft. The *Hornet* is powered by two General Electric F404-GE-400 engines. Each jet engine is rated in the 16,000 pounds of thrust class. The F/A-18 has in-flight refueling capability, and it can carry three external fuel tanks for additional range.

The *Hornet* has nine weapon stations. Two are wing-tip stations for Sidewinders, and two outboard wing stations for fuel tanks or air-to-ground weapons. There are two nacelle fuselage stations for Sparrows or sensor pods, and two inboard wing stations for fuel

F/A-18 HORNET

F-14 TOMCAT

EA-6B PROWLER

AV-8A HARRIER

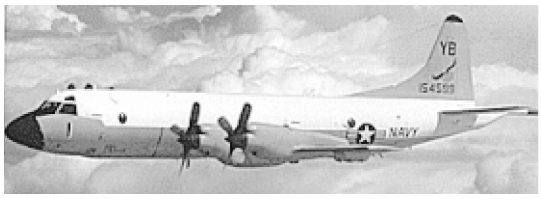

P-3 ORION

E-2C HAWKEYE

S-3 VIKING

T-45 GOSHAWK

C-9 SKYTRAIN II

ANF0211

Figure 2-11.—Representative types of fixed-wing aircraft.

V-22 OSPREY

UH-46 SEA KNIGHT

AH-1W SUPER COBRA

H-57 JET RANGER

UH-1N HUEY

H-3 SEA KING

SH-2 SEASPRITE

SH-60B SEAHAWK

H-53 SUPER STALLION

ANF0212

Figure 2-12.—Representative types of rotary-wing naval helicopters.

tanks or air-to-ground weapons. Also, there is one centerline station for fuel or air-to-ground weapons. The internal M61A1 (20-mm) gun is mounted in the nose.

GRUMMAN TOMCAT, F-14

The F-14 is a twin-engine fighter designed for aircraft carrier operations. It provides the carrier task force with its first-line offense and defense against enemy air threat. The crew consists of a pilot and a radar intercept officer.

The F-14 carries six long range AIM-54A Phoenix missiles that can be guided against six separate threat aircraft at long range, which is controlled by the F-14s AWG-9 weapons system. Sparrow missiles are carried for medium-range combat. Sidewinders and one M61A1 gun (20-mm) are available for close-range aerial combat. The *Tomcat's* variable swept wings give

it a combat maneuverability that could not have been achieved with a "standard" fixed platform wing. The aircraft is powered by two Pratt and Whitney TF30-P-412 engines with afterburners.

GRUMMAN PROWLER, EA-6

The EA-6 *Prowler* was designed to compliment the Navy's defenses in today's electronic warfare environment for carrier and advanced base operations. With a crew of four, a pilot and three electronic countermeasures officers (ECMOs), this long-range, all-weather-capable aircraft has the ability to intercept, analyze, and effectively jam and neutralize hostile radar.

The EA-6 is powered by two Pratt and Whitney J52-P-408 turbojet engines, and it has a combat range of 2,083 nautical miles and a maximum speed at sea level of 651 mph. It can carry electronic countermeasure (ECM) pods, external fuel cells, and stores to support strike aircraft, ships, and ground troops.

MCDONNELL DOUGLAS HARRIER II, AV-8

The *Harrier* is one of today's truly unique and most widely known military aircraft. The only fixed-wing, vertical short takeoff and landing (V/STOL) aircraft in the free world. The original design was based on a French engine concept, adopted and improved upon by the British. The U.S. Navy and Marine Corps showed a major interest in the *Harrier* for day or night attack and close troop ground support missions.

With a crew of one pilot, it is powered by one Rolls-Royce Pegasus F-402-RR-404 vectored thrust turbofan engine. Its movable engine exhaust nozzles gives it the capability of vertical flight. Ordnance wing mounts carry 500 or 1,000 pound bombs, and under belly pod-mounted, high-speed machine guns. Forward Looking Infrared Radar (FLIR) and Night Vision Goggles (NVGs) are some of the *Harrier's* war-fighting capabilities.

LOCKHEED ORION, P-3

The P-3 *Orion* is a land-based ASW aircraft. It represents advancements stemming from the Navy's antisubmarine research and development program over the last several years.

It is the world's most complete airborne antisubmarine detection system. The C model has a new data processing system. It uses a high-speed digital computer for obtaining information from both the aircraft's submarine detection sensors and a memory bank. The system display provides a readout of tactical ASW detection information to the operator.

It is powered by four Allison turboprop engines. The cabin is air-conditioned, pressurized, and equipped with bunks and a galley. Normally, a crew of 10 is needed for ASW operations. Included in its armament are depth charges, torpedoes, and rockets.

LOCKHEED VIKING, S-3

The S-3 is the newest ASW aircraft in the Navy. It is equipped with infrared sensors for night operation. Its digitally computerized sensors include a high resolution radar. It also has a magnetic anomaly detection (MAD) gear in its tail section. MAD equipment detects metal objects by monitoring disturbances of the earth's magnetic field.

The pressurized S-3 can search for subs from 35,000 feet at speeds over 300 knots. Its two turbofan engines are also efficient at low altitudes and low speeds.

GRUMMAN HAWKEYE, E-2

The *Hawkeye* was designed with one primary mission in mind: patrolling the skies to detect impending attack by hostile aircraft, missiles or sea forces. Capable of all-weather carrier operations, the *Hawkeye* provides strike and traffic control, area surveillance, search and rescue guidance, navigational assistance and communications relay. With its 24-foot revolving radar dish and sophisticated electronic equipment it can track, detect or direct targets within a three-million-cubic-mile area.

The *Hawkeye* has a five-man crew, two pilots and three equipment operators. It is powered by two Allison T56-A-422 turboprop engines and has a speed of 630 mph.

SIKORSKY SEA KING, SH-3

The SH-3 is a twin-engine helicopter. It's used primarily for antisubmarine warfare, but it is used also for sea/air rescue and transportation.

The crew consists of a pilot, copilot, sonar operator, and a relief sonar operator. Designed for land and carrier ASW operations, the A-model incorporates an automatic folding pylon. In addition to the sonar detection equipment, it is equipped with an automatic

hovering device. It is capable of water landing and takeoff.

Distinguishing features include a hull-shaped fuselage and outrigger sponson's, into which the main landing gear retracts.

A fixed horizontal stabilizer is installed on the upper right side of the pylon, and two General Electric gas turboshaft engines are mounted side by side above the fuselage and forward of the rotor head.

SIKORSKY SEA HAWK, H-60

The *Sea Hawk*, better known as the LAMPS (Light Airborne Multipurpose System) helicopter provides all-weather capability for detection, classification, localization, and interdiction of ships and submarines. Secondary missions include; search and rescue, medical evacuation, vertical replenishment, special warfare support and communications relay.

It has a crew of four, two pilots and two enlisted aircrew, and is powered by two General Electric T700-GE-401 engines. Different variants of the *Sea Hawk* enable it to perform ASW, logistic, weapons delivery or troop transport missions.

SIKORSKY SUPER STALLION, H -53

The *Super Stallion's* primary mission is to move cargo and equipment with a secondary role of troop transfer during amphibious assault operations. With two versions, utility and mine countermeasures, this heavy lift helicopter is one of the free worlds largest and most powerful. It has a crew of three, powered by three General Electric T64-GE-416 engines, seven main rotor blades, and weighs 73,500 maximum loaded. The *Super Stallion* can refuel in flight, has accommodations for 38 combat-equipped troops or 24 litter patients, and can lift over 16 tons.

BOEING-VERTOL SEA KNIGHT, H-46

The H-46 has a tandem rotor configuration, which sets it apart from the single rotor design. The *Sea Knight* is a medium lift cargo and troop transport helicopter that has been the workhorse for the Navy and Marine Corps for decades. Numerous modifications and upgrades, increased fuel capacity, fiber glass rotor blades, rescue hoist, 10,000-pound external cargo loading provisions, automatic blade fold, guns and armor are just a few of the improvements.

Powered by two General Electric T58-GE-16 turboshaft engines, the *Sea Knight* can reach speeds of 166 mph, weighs 23,300 pounds fully loaded, and has a crew of three—two pilots and one crewman.

Q2-30. In what year was the present naval Aircraft Identification System initiated?

Q2-31. In the aircraft designation F/A-18E, what does the letter "F" specify?

Q2-32. In the aircraft designation F/A-18E, what does the letter "E" represent?

Q2-33. What contractor manufacturers the SV-22 Osprey?

SUMMARY

In this chapter, you have learned about naval aviation organization and the types of aircraft found in squadrons and on naval air stations. You have also learned about squadron organization and the types of duties you might be assigned within a squadron.

ASSIGNMENT 2

Textbook Assignment: "Organization of Naval Aviation," chapter 2, pages 2-1 through 2-22.

2-1. What person is the head of the Navy Department?

1. The CNO
2. The DCNO
3. The Secretary of Defense
4. The Secretary of the Navy

2-2. The Navy Department falls under the authority of a cabinet post. This cabinet post is manned by what person?

1. Secretary of the Interior
2. Secretary of the Navy
3. Secretary of Defense
4. Secretary of the Treasury

2-3. What person is the immediate head of the military part of the Navy Department?

1. President
2. Secretary of the Navy
3. Chief of Naval Department
4. Chief of Naval Operations

2-4. When used properly, the chain of command serves which of the following purposes?

1. It provides direction in the assignment of duties
2. It provides a path of communication
3. It ensures efficiency in solving work- related problems
4. All of the above

2-5. Naval air stations provide which of the following services?

1. Supply
2. Repair
3. Specialized training
4. All of the above

2-6. The naval air station has the responsibility for providing what type of maintenance?

1. Organizational level
2. Intermediate level
3. Depot level (where available)
4. All of the above

2-7. Flight training provided by naval air stations consists of what three types?

1. Basic, preflight, and daily
2. Preflight, basic, and advanced
3. Daily, basic, and advanced
4. Preflight, daily, and advanced

2-8. A FRAMP provides which of the following types of training?

1. Specific type aircraft maintenance training only
2. Specific support equipment training only
3. Specific type aircraft maintenance training and specific support equipment training
4. Depot-level maintenance training

2-9. Typical naval air stations are divided primarily into what type of organizations?

1. Crews
2. Units
3. Divisions
4. Departments

2-10. Which of the following individuals is NOT a special assistant to the CO/XO of a naval air station?

1. The chaplain
2. The quality assurance officer
3. The general safety officer
4. The aviation safety officer

2-11. The distribution and collection of mail, duplicating and clerical services, and control of registered publications are the functions of what department?

1. Administration
2. Operations
3. Comptroller
4. Security

2-12. What department is responsible for the conduct of the military recreational program?

1. Personnel Department
2. Administration Department
3. Supply Department
4. Public Works Department

2-13. Advising the commanding officer in planning, organizing, directing, and executing a sound financial system that will contribute to the efficient, economical, and effective management of the station is a function of what department?

1. Supply
2. Finance
3. Comptroller
4. Administration

2-14. The administration of air traffic control is a function of what department?

1. Air operations
2. Security
3. Public works
4. Administration

2-15. What department is responsible for the logistic support of the naval air station and its tenant commands?

1. Supply
2. Finance
3. Comptroller
4. Administration

2-16. What department is responsible for minor construction and building maintenance aboard a naval air station?

1. Supply
2. Administration
3. Air operations
4. Public works

2-17. Transportation aboard a naval air station is provided by what department?

1. Supply
2. Operations
3. Public works
4. Transportation

2-18. The issuance of aviation ordnance is a function of what department?

1. Weapons
2. Security
3. Air operations
4. Administration

2-19. Under the direction of the medical officer, which of the following persons oversees all matters pertaining to aviation medicine?

1. Emergency room physician
2. Flight surgeon
3. Dental officer
4. Hospital Corpsman

2-20. Naval aircraft maintenance is divided into how many levels?

1. One
2. Two
3. Three
4. Four

2-21. Inspecting and adjustment of aircraft parts are performed at what maintenance level?

1. Organizational
2. Intermediate
3. Depot
4. Moderate

2-22. Major overhaul and repair of aircraft is performed at what activity?

1. Aircraft squadron
2. Aircraft Intermediate Maintenance Department (AIMD)
3. Air station public works
4. Naval Aviation Depot (NADEP)

2-23. Calibration, testing, and repair of aircraft components are performed at what facility?

1. Organizational Maintenance Division (OMD)
2. Aircraft Intermediate Maintenance Department (AIMD)
3. Naval Aviation Depot (NADEP)
4. Moderate Level Repair Facility (MLRF)

2-24. What division of the aircraft maintenance department maintains the technical library?

1. Analysis
2. Administration
3. Quality assurance/analysis
4. Support equipment

2-25. What division provides clerical services for the AIMD?

1. Administration
2. Maintenance material control
3. Quality assurance/analysis
4. Supply

2-26. Scheduling workloads to ensure the efficient movement of all aircraft and parts through the AIMD is the responsibility of what branch?

1. Material control
2. Production control
3. Supply
4. Quality assurance

2-27. An operations maintenance division is normally established at a naval air station that has at least what number of aircraft assigned?

1. Seven
2. Six
3. Five
4. Four

2-28. The aircraft gas turbine engine program is divided into how many degrees of repair?

1. One
2. Two
3. Three
4. Four

2-29. What division is responsible for the aircraft tire/wheel maintenance and safety program?

1. Airframes division
2. Support equipment division
3. Tire/wheel division
4. Line division

2-30. What division is responsible for the calibration of precision measuring equipment (PME)?

1. Electrical repair division
2. Electronic systems division
3. Avionics division
4. Power plants division

2-31. Aircraft air-conditioning and pressurization system maintenance is performed by what division?

1. Aviation life support equipment division
2. Airframes division
3. Aviation support equipment division
4. Air-conditioning/pressurization division

2-32. Which of the following organizations is normally smaller than a naval air station?

1. The Naval Aviation Logistics Center
2. The Naval Test Center
3. The Naval Air Facility
4. The Naval Station

2-33. What maintenance activity manufactures parts and assemblies and provides engineering services?

1. The Naval Air Facility
2. The Organizational maintenance Facility
3. The Naval Aviation Depot
4. The Aircraft Intermediate Maintenance Facility

2-34. Which of the following squadrons are basic type squadrons?

1. Carrier only
2. Patrol only
3. Composite and noncombatant only
4. Carrier, patrol, composite, and noncombatant

2-35. What type of squadron is employed for various missions that include enemy attack, search, bombing, mining, and torpedo warfare?

1. Fighter
2. Attack
3. Bomber
4. Early warning

2-36. What type of carrier squadron uses both fixed-wing aircraft and helicopters for search and attack of enemy submarines?

1. Attack
2. Composite
3. Airborne early warning
4. Antisubmarine

2-37. Which of the following types of squadrons has the responsibility for the mining of waters?

1. Antisubmarine
2. Composite
3. Patrol
4. Tactical

2-38. Target towing is one of the functions of what type of squadron?

1. Composite
2. Patrol
3. Tactical support
4. Noncombatant

2-39. What type of squadron provides logistical support?

1. Tactical
2. Patrol
3. Composite
4. Attack

2-40. A member of a squadron should receive the greatest amount of help for professional advancement from which of the following officers?

1. Division officer
2. Chief petty officer
3. Education officer
4. Maintenance officer

2-41. Operational readiness of a squadron is the responsibility of what officer?

1. Commanding officer
2. Operations officer
3. Executive officer
4. Flight officer

2-42. Ensuring that the orders of a squadron's commanding officer are carried out is the direct responsibility of what person?

1. Crew chief
2. Department head
3. Executive officer
4. Division officer

2-43. In the maintenance department, which of the following officers has the responsibility for planning, scheduling, and supervising all activities for the production divisions?

1. Quality assurance/analysis officer
2. Maintenance material control officer
3. Assistant maintenance officer
4. Maintenance officer

2-44. What department is responsible for the operational readiness and tactical efficiency of the squadron?

1. Administration
2. Maintenance
3. Operations
4. Safety

2-45. In a squadron, what division inspects the work to ensure that repair work on aircraft, engines, accessories, and equipment has been done correctly?

1. Aircraft
2. Line
3. Safety
4. Quality assurance/analysis

2-46. Supervising, coordinating, and completing scheduled maintenance is the responsibility of what division?

1. Maintenance control
2. Avionics
3. Safety
4. Aircraft

2-47. Performing preflight, turnaround, daily, and postflight inspections is the responsibility of what division?

1. Line
2. Avionics
3. Safety
4. Aircraft

2-48. Maintaining custody of a squadron's support equipment is the responsibility of what division?

1. Line
2. Avionics
3. Safety
4. Aircraft

2-49. Management of the Foreign Object Damage (FOD) program is the responsibility of what division?

1. Line
2. Avionics
3. Aircraft
4. Quality assurance/analysis

2-50. Welfare and morale of personnel aboard a carrier are the direct responsibility of what person?

1. Welfare officer
2. Senior chaplain
3. Executive officer
4. Commanding officer

2-51. In a carrier air wing, what officer has the responsibility for maintaining the squadron organization?

1. The air wing commander
2. The chief of naval operations
3. The ship's commanding officer
4. The squadron commanding officer

2-52. What department is responsible for the combat information center?

1. Air
2. Operations
3. Maintenance
4. Administration

2-53. What is the maximum number of divisions normally established within the air department?

1. Four in both wartime and peacetime
2. Seven in both wartime and peacetime
3. Four in wartime and seven in peacetime
4. Four in peacetime and seven in wartime

2-54. The aircraft crash, fire, and rescue party is included in which of the following divisions?

1. V-1
2. V-2
3. V-3
4. V-4

2-55. What division is charged with the operation and maintenance of catapults and arresting gear on an aircraft carrier?

1. V-1
2. V-2
3. V-3
4. V-4

2-56. The V-3 division is responsible for what function on an aircraft carrier?

1. Aircraft maintenance
2. Catapult and arresting gear
3. Aviation fuels
4. Aircraft on the hangar deck

2-57. What division is charged with the operation and upkeep of the aircraft carrier's aviation fuel and oil transfer system?

1. V-1
2. V-2
3. V-3
4. V-4

2-58. The care and maintenance of all machinery, piping systems, and electrical devices are the responsibility of what department on the ship?

1. Supply
2. Weapons
3. Engineering
4. Air operations

2-59. The aircraft intermediate maintenance department (afloat) is organized in a similar manner to which of the following shore-based activities?

1. The supply department
2. The aircraft maintenance division
3. The operations maintenance department
4. The aviation maintenance department

2-60. An aircraft intermediate maintenance department (afloat) is manned with what type of personnel?

1. Permanently assigned maintenance personnel only
2. Temporarily assigned personnel from embarked squadrons only
3. Permanently assigned maintenance personnel and temporarily assigned personnel from embarked squadrons
4. Civilians

2-61. The designation of the basic mission of an aircraft is indicated by what means?

1. A letter only
2. A letter followed by a number
3. A number only
4. A number followed by a letter

2-62. What is the letter identifier for the aircraft mission of transport?

1. U
2. T
3. C
4. S

2-63. In an aircraft designation, what is the basic aircraft mission for the letter "K"?

1. Research
2. Tanker
3. Transport
4. Observation

2-64. What is the letter identifier for the aircraft mission of antisubmarine?

1. R
2. H
3. A
4. S

2-65. What type of aircraft does the aircraft mission modification letter "Q" identify?

1. Drone
2. Cold weather
3. Patrol
4. Utility

2-66. An aircraft designated for “staff” has what mission modification letter?

1. E
2. V
3. S
4. O

2-67. What is the mission modification letter in the F/A18-E *Hornet*?

1. F/A
2. E
3. A
4. F

2-68. To indicate a change in the original design of a aircraft, which of the following letters can NOT be used?

1. A
2. B
3. C
4. D

2-69. What does "E" in the aircraft designation EA-6A mean?

1. Attack
2. Design
3. Modified once
4. Modified with a special electronic installation

2-70. Refer to Table 2-1 of your text. The *Osprey* aircraft was made by what manufacturer?

1. McDonald-Douglas
2. Bell-Boeing
3. Lockheed
4. Grumman

2-71. What gives the *Tomcat* aircraft its excellent combat maneuvering capability?

1. Twin engines with afterburners
2. Variable swept wings
3. Six long-range missiles
4. Advanced hydraulic system

2-72. What feature makes the AV-8 *Harrier* unique among today's modern combat aircraft?

1. Vertical short takeoff and landing capabilities
2. High-speed digital computer data processing system
3. Electronic countermeasures equipment
4. High altitude capabilities

2-73. Which of the following ASW aircraft is equipped with infrared sensors for night operations?

1. A-3
2. H-3
3. P-3
4. S-3

2-74. What helicopter provides all-weather capability for detection, classification, localization, and interdiction of ships and submarines?

1. H-3
2. H-46
3. H-53
4. H-60

2-75. What helicopter has a tandem rotor system?

1. H-3
2. H-46
3. H-53
4. H-60

CHAPTER 3

PRINCIPLES OF FLIGHT

INTRODUCTION

Man has always wanted to fly. Legends from the very earliest times bear witness to this wish. Perhaps the most famous of these legends is the Greek myth about a father and son who flew with wings made of wax and feathers. It was not, however, until the successful flight by the Wright bothers at Kitty Hawk, North Carolina, that the dream of flying became a reality. Since the flight at Kitty Hawk, aircraft designers have spent much time and effort in developing that first crude flying machine into the modern aircraft of today. To understand the principles of flight, you must first become familiar with the physical laws affecting aerodynamics.

PHYSICAL LAWS AFFECTING AERODYNAMICS

LEARNING OBJECTIVE: Identify the physical laws of aerodynamics to include Newton's laws of motion and the Bernoulli principle.

Aerodynamics is the study of the forces that let an aircraft fly. You should carefully study the principles covered here. Whether your job is to fly the aircraft and/or to maintain it, you should know why and how an aircraft flies. Knowing why and how lets you carry out your duties more effectively.

LAWS OF MOTION

Motion is the act or process of changing place or position. Simply put, motion is movement. An object may be **in motion in relation** to one object and **motionless in relation** to another. For example, a person sitting in an aircraft flying at 200 mph is at rest or motionless in relation to the aircraft. However, the person is in motion in relation to the air or the earth. Air has no force or power other than pressure when it's motionless. When air is moving, its force becomes apparent. A moving object in motionless air has a force exerted on it as a result of its own motion. It makes no difference in the effect whether an object is moving in relation to the air or the air is moving in relation to the object. The following information explains some basic laws of motion.

Newton's First Law of Motion

According to Newton's first law of motion (inertia), an object at rest will remain at rest, or an object in motion will continue in motion at the same speed and in the same direction, until an outside force acts on it. For an aircraft to taxi or fly, a force must be applied to it. It would remain at rest without an outside force. Once the aircraft is moving, another force must act on it to bring it to a stop. It would continue in motion without an outside force. This willingness of an object to remain at rest or to continue in motion is referred to as *inertia*.

Newton's Second Law of Motion

The second law of motion (force) states that if a object moving with uniform speed is acted upon by an external force, the change of motion (acceleration) will be directly proportional to the amount of force and inversely proportional to the mass of the object being moved. The motion will take place in the direction in which the force acts. Simply stated, this means that an object being pushed by 10 pounds of force will travel faster than it would if it were pushed by 5 pounds of force. A heavier object will accelerate more slowly than a lighter object when an equal force is applied.

Newton's Third Law of Motion

The third law of motion (action and reaction) states that for every action (force) there is an equal and opposite reaction (force). This law can be demonstrated with a balloon. If you inflate a balloon with air and release it without securing the neck, as the air is expelled the balloon moves in the opposite direction of the air rushing out of it. Figure 3-1 shows this law of motion.

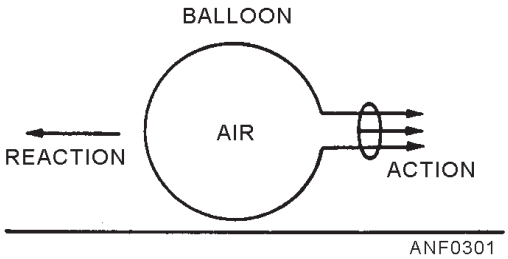

Figure 3-1.—Newton's third law of motion.

BERNOULLI'S PRINCIPLE

Bernoulli's principle (fig. 3-2) states that when a fluid flowing through a tube reaches a constriction or narrowing of the tube, the speed of the fluid passing through the constriction is increased and its pressure is decreased.

Q3-1. The willingness of an object to stay at rest because of inertia is described by which of Newton's laws of motion?

Q3-2. A heavy object will accelerate more slowly than a light object when an equal amount of force is applied. Which of Newton's laws describes this statement?

Q3-3. If you blow up a balloon and then release it, it will move in what direction?

Q3-4. When fluid reaches a narrow part of a tube, its speed increase and its pressure is decreased. What law does this statement describe?

THE AIRFOIL

LEARNING OBJECTIVE: Recognize the terms used to describe the various parts of an airfoil section and the terms used in explaining the airflow lift generation.

An airfoil is defined as that part of an aircraft that produces lift or any other desirable aerodynamic effect as it passes through the air. The wings and the propeller blades of a fixed-wing aircraft and the rotor blades of a helicopter are examples of airfoils.

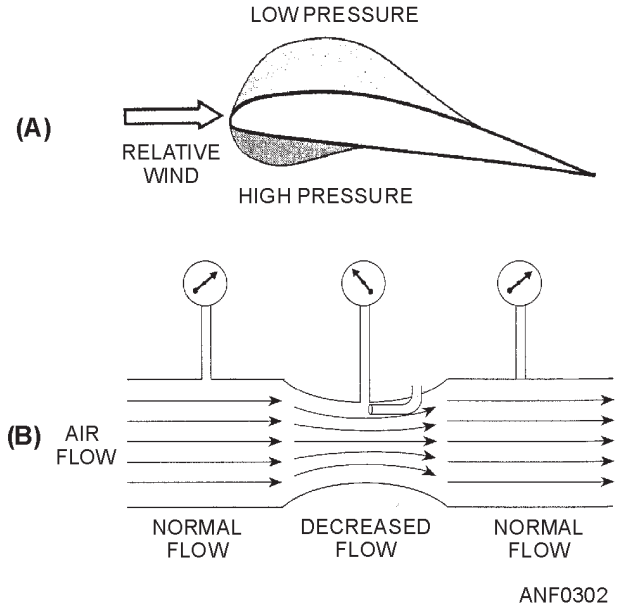

Figure 3-2.—Bernoulli's principle.

AIRFOIL TERMINOLOGY

The shape of an airfoil and its relationship to the airstream are important. The following are common terms that you should understand before you learn about airfoils.

Leading edge	The front edge or surface of the airfoil (fig. 3-3).
Trailing edge	The rear edge or surface of the airfoil (fig. 3-3).
Chord line	An imaginary straight line from the leading edge to the trailing edge of an airfoil (fig. 3-3).
Camber	The curve or departure from a straight line (chord line) from the leading to the trailing edge of the airfoil (fig. 3-3).
Relative wind	The direction of the airstream in relation to the airfoil (fig. 3-4).
Angle of attack	The angle between the chord line and the relative wind (fig. 3-4).

AIRFLOW AROUND AN AIRFOIL

The generation of lift by an airfoil depends on the airfoil's being able to create a special airflow in the airstream. This airflow develops the lifting pressure over the airfoil surface. The effect is shown in figure 3-5, which shows the relationship between lift and Bernoulli's principle. As the relative wind strikes the leading edge of the airfoil, the flow of air is split. A portion of the relative wind is deflected upward and aft, and the rest is deflected downward and aft. Since the

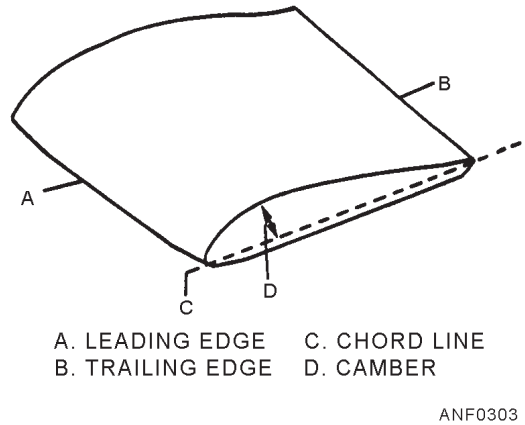

Figure 3-3.—Airfoil terminology.

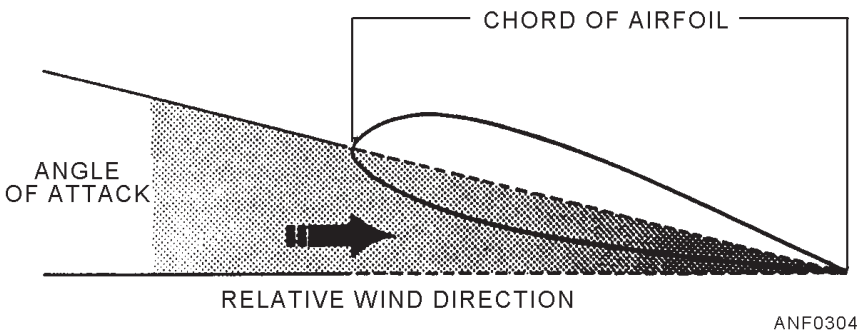

Figure 3-4.—Angle of attack.

upper surface of the airfoil has camber to it, the flow over its surface is disrupted. This disruption causes a wavelike effect to the airflow. The lower surface of the airfoil is relatively flat. The airflow across its surface isn't disrupted. Lift is accomplished by this difference in the airflow across the airfoil.

The shaded area of figure 3-5 shows a low-pressure area on the airfoil's upper surface. This low-pressure area is caused by the air that is disrupted by the camber of the airfoil, and it is the key to lift. There is less pressure on the top surface of the airfoil than there is on the lower surface. The air pressure pushes upward o the lower surface. This difference in pressure causes the airfoil to rise. **Now, you know that lift is developed by the difference between the air pressure on the upper and lower surfaces of the airfoil.** As long as there is less pressure on the upper surface and more pressure on the lower surface of an airfoil, an aircraft has lift. Lift is one of the forces affecting flight.

Q3-5. What happens when the relative wind strikes the leading edge of an airfoil?

Q3-6. Describe how lift is developed.

FORCES AFFECTING FLIGHT

LEARNING OBJECTIVE: Recognize the four primary forces acting on an aircraft.

An aircraft in flight is in the center of a continuous battle of forces. The conflict of these forces is the key to all maneuvers performed in the air. There is nothing mysterious about these forces—they are definite and known. The direction in which each acts can be calculated. The aircraft is designed to take advantage of each force. These forces are lift, weight, thrust, and drag.

LIFT

Lift is the force that acts in an upward direction to support the aircraft in the air. It counteracts the effects of weight. Lift must be greater than or equal to weight if flight is to be sustained.

WEIGHT

Weight is the force of gravity acting downward on the aircraft and everything in the aircraft, such as crew, fuel, and cargo.

THRUST

Thrust is the force developed by the aircraft's engine. It acts in the forward direction. Thrust must be greater than or equal to the effects of drag for flight to begin or to be sustained.

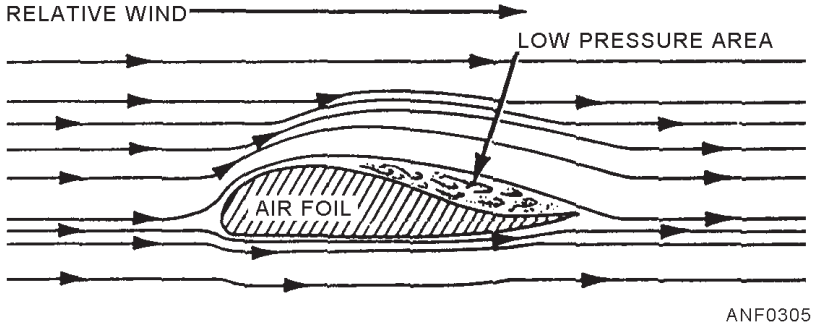

Figure 3-5.—Airflow across an airfoil.

DRAG

Drag is the force that tends to hold an aircraft back. Drag is caused by the disruption of the airflow about the wings, fuselage (body), and all protruding objects on the aircraft. Drag resists motion as it acts parallel and in the opposite direction in relation to the relative wind. Figure 3-6 shows the direction in which each of these forces acts in relation to an aircraft.

Up to this point, you have learned the physical laws of aerodynamics, airfoils, and the forces affecting flight. To fully understand flight, you must learn about the rotational axes of an aircraft.

Q3-7. What are the four forces that affect flight?

ROTATIONAL AXES

LEARNING OBJECTIVE: Identify the three axes of rotation and the terms relative to the aircraft's rotation about these axes.

Any vehicle, such as a ship, a car, or an aircraft, is capable of making three primary movements (roll, pitch, and yaw). The vehicle has three rotational axes that are perpendicular (90 degrees) to each other. These axes are referred to by their direction—longitudinal, lateral, and vertical. Perhaps the most descriptive reference is by what action takes place about a given axis or pivot point—roll, pitch, and yaw.

LONGITUDINAL AXIS

The longitudinal axis is the pivot point about which an aircraft rolls. The movement associated with roll is best described as the movement of the wing tips (one up and the other down). Figure 3-7 shows this movement. This axis runs fore and aft through the length (nose to tail) of the aircraft. This axis is parallel to the primary direction of the aircraft. The primary direction of a fixed-wing aircraft is always forward. Figure 3-8 shows the longitudinal axis.

LATERAL AXIS

The lateral axis is the pivot point about which the aircraft pitches. Pitch can best be described as the up and down motion of the nose of the aircraft. Figure 3-7 shows this movement. The pitch axis runs from the left to the right of the aircraft (wing tip to wing tip). It is perpendicular to and intersects the roll axis. Figure 3-8 shows the pitch axis and its relationship to the roll axis.

VERTICAL AXIS

The vertical axis runs from the top to the bottom of an aircraft. It runs perpendicular to both the roll and pitch axes. The movement associated with this axis is yaw. Yaw is best described as the change in aircraft heading to the right or left of the primary direction of an aircraft. Figure 3-7 shows this movement. Assume you are walking from your work space to an aircraft located 100 feet away. You are trying to walk there in a straight line but are unable to do so because there is a strong wind blowing you off course to your right. This movement to the right is yaw. The yaw axis is shown in figure 3-8.

Q3-8. Any vehicle (ship, car, or aircraft) is capable of making what three primary movements?

FIXED-WING AND ROTARY-WING AIRCRAFT

LEARNING OBJECTIVE: Recognize the difference in aerodynamic principles that apply to fixed- and rotary-wing aircraft.

A fixed-wing aircraft depends on forward motion for lift. A rotary-wing aircraft depends on rotating airfoils for lift. The airfoil sections of a fixed-wing aircraft aren't symmetrical. The rotor blades of a helicopter are symmetrical. These differences are important to you if you're to understand aerodynamic principles.

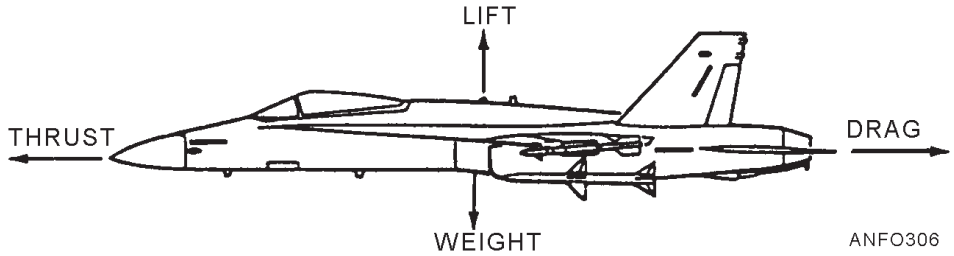

Figure 3-6.—Forces affecting flight.

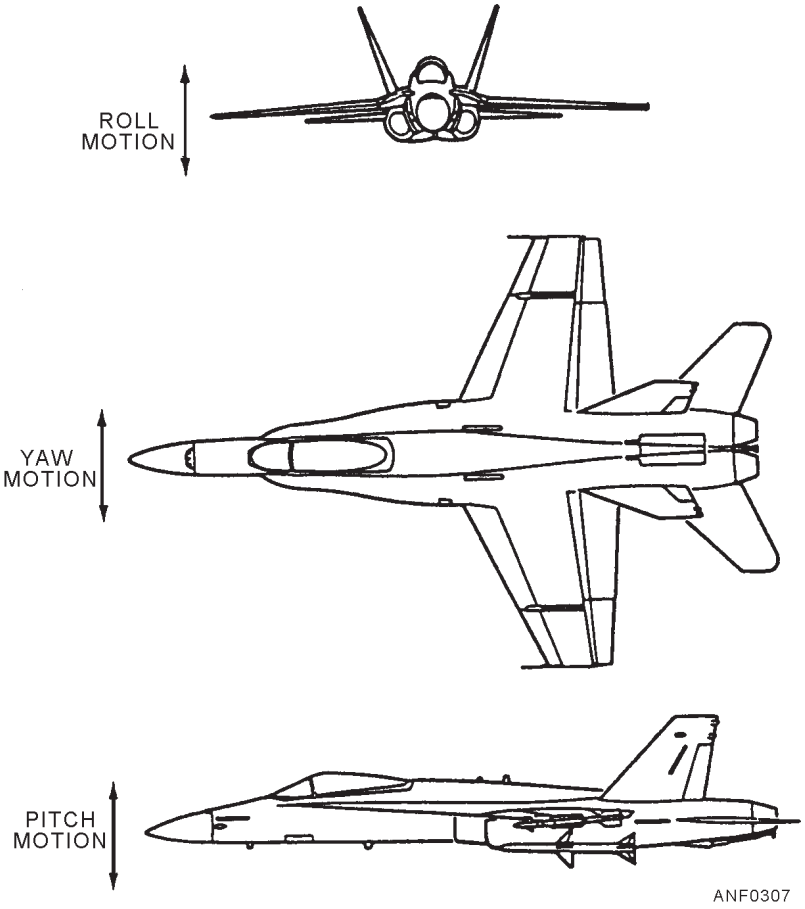

Figure 3-7.—Motion about the axes.

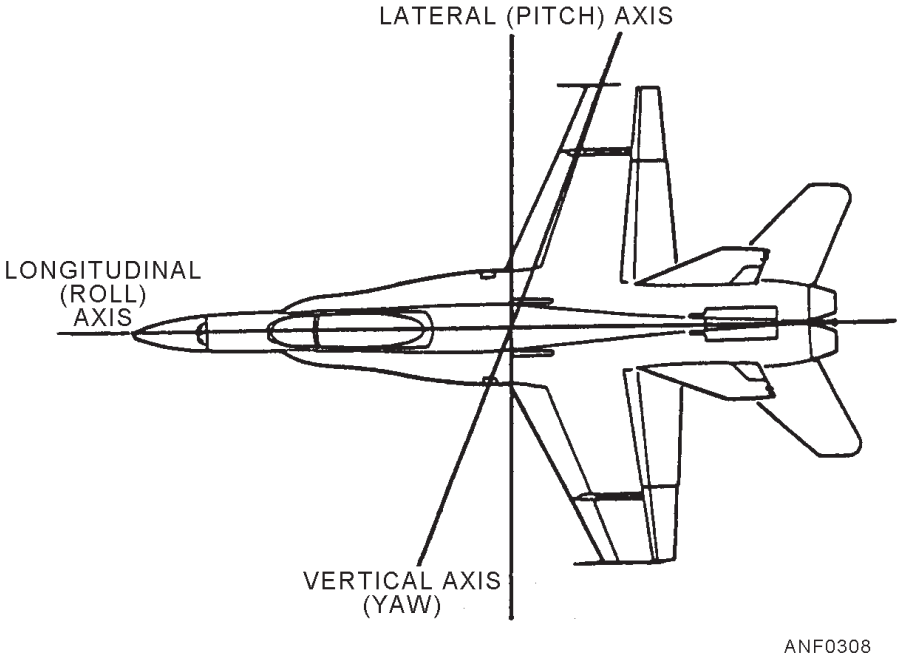

Figure 3-8.—Axes of an aircraft.

FIXED-WING AIRCRAFT

You have learned about the physical laws and forces that affect flight, the airfoil, and the rotational axes of an aircraft. Now, let's apply these principles to a fixed-wing aircraft in flight. First, motion must exist. Motion is provided by the thrust developed by the engine of the aircraft. This is accomplished by the force exerted by the exhaust gases of a jet aircraft or by the action of the propeller blades on a propeller-driven aircraft. The thrust overcomes the force of inertia and, as the fixed-wing aircraft accelerates, the air flows by the wings. The relative wind striking the leading edge of the wings is split and flows across the upper and lower surfaces. The camber of the upper surface acts as a constriction, which speeds up the airflow and reduces the pressure of the air. The lower surface, being relatively flat, doesn't affect the speed or pressure of the air. There is lower air pressure on the upper surface of the wing than on the lower surface. The fixed-wing aircraft is lifted into the air.

Now that the aircraft is safely in the air, rotational axes come into play. If the nose of the aircraft is raised, the angle of attack changes. Changing the angle of attack causes the aircraft to pivot on its lateral or pitch axis. If you lower the right wing of the aircraft, the left wing rises. The aircraft moves about its longitudinal or roll axis. Assume that the aircraft is in a straight and level flight. There is a strong wind striking the aircraft's nose on the left side, pushing the nose to the right. This causes the tail of the aircraft to move to the left, and the aircraft is pivoting on its vertical or yaw axis. All of these forces are necessary for flight to begin or be sustained.

ROTARY-WING AIRCRAFT (HELICOPTERS)

The same basic aerodynamic principles you read about earlier in this chapter apply to rotary-wing aircraft. The main difference between fixed-wing and rotary-wing aircraft is the way lift is achieved.

Lift

The fixed-wing aircraft gets its lift from a fixed airfoil surface. The helicopter gets lift from rotating airfoils called *rotor blades*. The word *helicopter* comes from the Greek words meaning *helical wing* or r*otating wing*. A helicopter uses two or more engine-driven rotors from which it gets lift and propulsion.

The helicopter's airfoils are the rotor blades. The airfoils of a helicopter are perfectly symmetrical. This means that the upper and lower surfaces are shaped the same. This fact is one of the major differences between the fixed-wing aircraft's airfoil and the helicopter's airfoil. A fixed-wing aircraft's airfoil has a greater camber on the upper surface than on the lower surface. The helicopter's airfoil camber is the same on both surfaces (fig. 3-9). The symmetrical airfoil is used on the helicopter because the center of pressure across its surface is fixed. On the fixed-wing airfoil, the center of pressure moves fore and aft, along the chordline, with changes in the angle of attack (fig. 3-9). If this type of airfoil were used on a rotary-wing aircraft, it would cause the rotor blades to jump around (dive and climb) uncontrollably. With the symmetrical airfoil, this undesirable effect is removed. The airfoil, when rotated, travels smoothly through the air.

The main rotor of a helicopter consists of two or more rotor blades. Lift is accomplished by rotating the blades through the air at a high rate of speed. Lift may be changed by increasing the angle of attack or pitch of the rotor blades. When the rotor is turning and the blades are at zero angle (flat pitch), no lift is developed. This feature provides the pilot with complete control of the lift developed by the rotor blades.

Directional Control

A pilot controls the direction of flight of the helicopter by tilting the main rotor. If the rotor is tilted forward, the force developed by the rotor is directed downward and aft. Now, apply Newton's third law of motion (action and reaction). Lift will be developed in an upward and forward direction, and the helicopter will tend to rise and move forward. From this example,

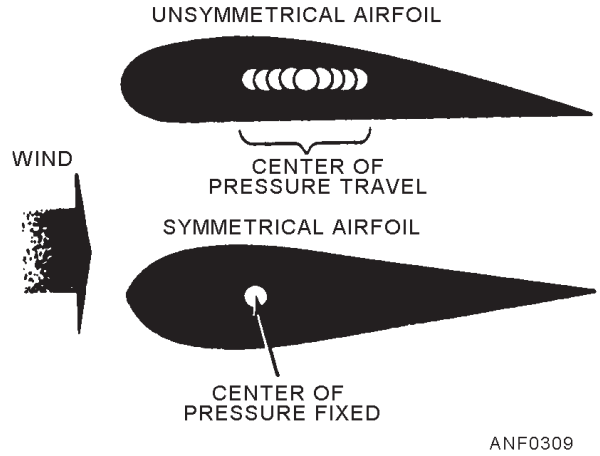

Figure 3-9.—Center of pressure.

you should realize that a pilot can move a helicopter forward or rearward, or to the right or left, simply by tilting the main rotor in the desired direction.

Look at figure 3-10. This points out another major difference between fixed-wing and rotary-wing aircraft. The fixed-wing aircraft can't move up or down or right or left without forward movement. Remember, a fixed-wing aircraft's primary direction is forward. However, a helicopter can move in any direction, with or without forward movement.

Hovering

Hovering is defined as maintaining a position above a fixed spot on the ground. A helicopter has the ability to remain in one spot in the air with little or no movement in any direction. This is done by equalizing all the forces acting on the helicopters (lift, drag, weight, and thrust). This action also allows a helicopter to take off or land without a runway. This is another advantage the rotary-wing aircraft has over the fixed-wing aircraft.

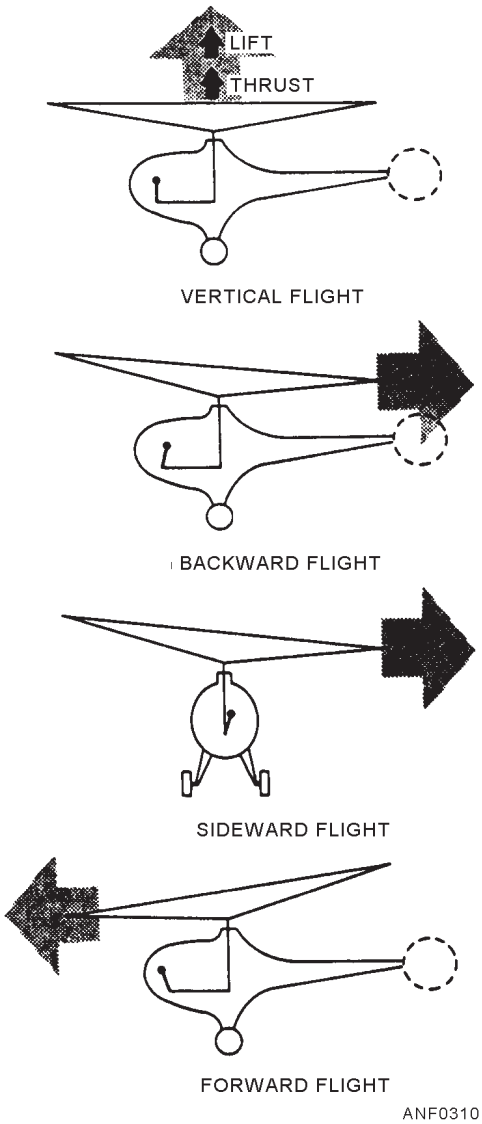

Figure 3-10.—Directional flight attitudes.

Torque Reaction

As the helicopter's main rotor turns in one direction, the body (fuselage) of the helicopter tends to rotate in the opposite direction (Newton's third law). This is known as *torque reaction*. In a single main rotor helicopter, the usual way of getting rid of torque reaction is by using a tail rotor (anti-torque rotor). This rotor is mounted vertically on the outer portion of the helicopter's tail section. See figure 3-11. The tail rotor produces thrust in the opposite direction of the torque reaction developed by the main rotor. Figure 3-11 shows the manner in which torque reaction is eliminated in a single main rotor helicopter.

Q3-9. How does the pilot change the angle of attack on (a) an airplane and (b) a helicopter?

Q3-10. What is the main difference between a helicopter and an airplane?

Q3-11. What maneuver can a helicopter perform that an airplane cannot?

SUMMARY

In this chapter, you have been introduced to the principles of flight. You have learned about the principles of flight for fixed-wing and rotary-wing aircraft.

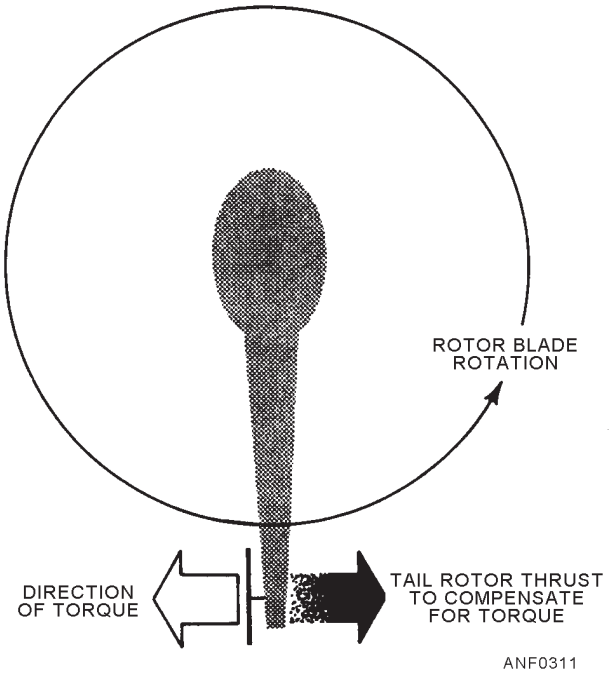

Figure 3-11.—Torque reaction.

(THIS PAGE IS INTENTIONALLY LEFT BLANK.)

ASSIGNMENT 3

Textbook Assignment: "Principles of Flight," chapter 3, pages 3-1 through 3-7.

3-1. The study of the forces that enable an aircraft to fly is referred to by what term?

1. Thermodynamics
2. Aerodynamics
3. Hydrodynamics
4. General dynamics

3-2. Which of the following is a definition of motion?

1. The act or process of changing place or position
2. The act or process of achieving inertia
3. The overcoming of force
4. The resistance to force

3-3. Which of the following terms refers to Newton's first law of motion?

1. Force
2. Action and reaction
3. Inertia
4. Gravity

3-4. Thrust must overcome inertia before an aircraft can fly. This is an example of which of the following laws of motion?

1. Newton's first law
2. Newton's second law
3. Newton's third law

3-5. Newton's law of inertia applies to bodies that are affected in which of the following ways?

1. Those that are at rest only
2. Those moving in a straight line at a uniform speed only
3. Those at rest and moving at a uniform speed in a straight line
4. The willingness of an object to remain at rest or continue in motion

3-6. What law of motion is the "force" law?

1. Newton's first law
2. Newton's second law
3. Newton's third law

3-7. The fact that "for every action there is an equal and opposite reaction" is discussed in which of Newton's laws of motion?

1. First
2. Second
3. Third

IN ANSWERING QUESTIONS 3-8 AND 3-9, REFER TO FIGURE 3-2(B) IN THE TEXT.

3-8. At what location is the area of least pressure?

1. To the left of the airfoil
2. To the right of the airfoil
3. Beneath the airfoil
4. Over the airfoil

3-9. At what location is the area of increased flow?

1. Over the airfoil
2. Under the airfoil
3. To the left of the airfoil
4. To the right of the airfoil

3-10. According to Bernoulli's principle, what happens to the speed and pressure of a fluid flowing through a tube when the fluid reaches a constriction?

1. The speed and pressure of the fluid increases
2. The speed and pressure of the fluid decreases
3. The speed decreases and the pressure increases
4. The speed increases and the pressure decreases

3-11. Which of the following components are classified as airfoils?

1. The wings of an aircraft
2. The rotor blades of a helicopter
3. The propeller blades of a turboprop aircraft
4. All of the above

3-12. What is the front edge or surface of an airfoil?

1. Chamber
2. Chord line
3. Leading edge
4. Trailing edge

3-13. What is an imaginary straight line from the leading edge to the trailing edge of an airfoil?

1. Camber
2. Chord line
3. Span
4. Angle of attack

3-14. Which of the following terms identifies the rear edge or surface of the airfoil?

1. Span line
2. Retreating edge
3. Chord line
4. Trailing edge

3-15. What is the curve or departure from a straight line from the leading edge to the trailing edge of the airfoil?

1. Camber
2. Chord line
3. Angle of attack
4. The angle of incident

3-16. What term is used to describe the direction of the airstream in relation to the airfoil?

1. Angle of attack
2. Directional heading
3. Relative wind
4. Chord line

3-17. What is the angle between the chord line and the relative wind called?

1. The angle of attack
2. The resultant angle
3. The control angle
4. The angle of incidence

3-18. The generation of lift by an airfoil is dependent upon which of the following factors?

1. The shape of the airfoil's cord
2. The airfoil being able to create circulation in the airstream
3. The airfoil being able to develop lifting pressure over the airfoil surface
4. Both 2 and 3 above

3-19. As the relative wind strikes the leading edge of an airfoil, the flow of air is split. What part of the airfoil creates the low pressure area on the airfoil's surface?

1. The camber of the airfoil's upper surface
2. The camber of the airfoil's lower surface
3. The trailing edge of the airfoil
4. The leading edge of the airfoil

3-20. What speed or pressure causes most of the lift of an airfoil?

1. The speed of the air striking the front of the airfoil
2. The difference in air pressure on the upper and lower surfaces of the airfoil
3. The increase in pressure over the airfoil
4. The decrease in pressure over the airfoil

3-21. What is the force that is created by an airfoil?

1. Lift
2. Drag
3. Gravity
4. Thrust

3-22. What force overcomes gravity?

1. Drag
2. Lift
3. Thrust
4. Weight

3-23. What is the force that holds an aircraft to the ground?

1. Lift
2. Drag
3. Gravity
4. Thrust

3-24. What is the force that is created by a propeller, jet engine, or helicopter rotor?

1. Lift
2. Drag
3. Gravity
4. Thrust

3-25. What force overcomes drag?

1. Lift
2. Thrust
3. Weight
4. Momentum

3-26. What is the force that acts against an aircraft in flight?

1. Lift
2. Drag
3. Gravity
4. Thrust

3-27. Aircraft drag acts in what direction in relation to the relative wind?

1. Parallel and in the same direction
2. Parallel and in the opposite direction
3. Perpendicular in the same direction
4. Perpendicular and in the opposite direction

3-28. During flight, if the aircraft's lift force and weight force are equal and the thrust force is greater than the drag force, what will happen?

1. The aircraft will lose altitude and lose speed
2. The aircraft will lose altitude and gain speed
3. The aircraft will maintain its altitude and lose speed
4. The aircraft will maintain its altitude and gain speed

3-29. Which of the following forces counteracts forward motion of the aircraft?

1. Weight
2. Lift
3. Drag
4. Thrust

3-30. What axis is the pivot point about which an aircraft rolls?

1. Longitudinal
2. Lateral
3. Vertical
4. Horizontal

3-31. What movement of an aircraft is associated with roll?

1. The up and down movement of the wing tips
2. The left and right movement of the aircraft's nose
3. The up and down movement of the aircraft's nose
4. The fore and aft movement of the wings

3-32. What axes runs fore and aft through the length of the aircraft?

1. Longitudinal
2. Diagonal
3. Horizontal
4. Lateral

3-33. What axes is the pivot point about which an aircraft pitches?

1. Longitudinal
2. Lateral
3. Vertical
4. Horizontal

3-34. What movement of an aircraft is associated with pitch?

1. The up and down movement of the wing tips
2. The left and right movement of the aircraft's nose
3. The up and down movement of the aircraft's nose
4. The fore and aft movement of the wings

3-35. What axes runs from the left to the right (wing tip to wing tip) through the width of an aircraft?

1. Pitch
2. Longitudinal
3. Vertical
4. Diagonal

3-36. What axes is the pivot point about which an aircraft yaws?

1. Longitudinal
2. Lateral
3. Vertical
4. Horizontal

3-37. What axes runs from the top to the bottom of an aircraft?

1. Diagonal
2. Longitudinal
3. Lateral
4. Vertical

3-38. What movement of an aircraft is associated with yaw?

1. The up and down movement of the wing tips
2. The up and down movement of an aircraft's nose
3. The left and right movement of an aircraft's nose
4. The fore and aft movement of an aircraft's nose

3-39. What force is developed by the engine of an aircraft to provide motion?

1. Lift
2. Drag
3. Gravity
4. Thrust

3-40. When an aircraft in flight increases its angle of attack, which of the following actions is accomplished?

1. The aircraft pivots on its longitudinal axis
2. The aircraft pivots on its lateral axis
3. The aircraft will turn to the right
4. The aircraft will turn to the left

3-41. When an aircraft in flight encounters a strong gusty, quartering wind on its nose, it tends to drift off course. On what axis does the aircraft pivot when this action occurs?

1. The pitch axis
2. The yaw axis
3. The lateral axis
4. The longitudinal axis

3-42. The main difference between fixed-wing aircraft and rotary-wing aircraft is the way in which lift is achieved.

1. True
2. False

3-43. A helicopter uses two or more engine-driven rotors for lift and propulsion.

1. True
2. False

3-44. What is a symmetrical airfoil?

1. An airfoil that has a greater camber on the upper surface than on the lower surface
2. An airfoil that has less camber on the upper surface than on the lower surface
3. An airfoil that has a variable center of pressure
4. An airfoil that has a fixed center of pressure

3-45. On an unsymmetrical airfoil, in what direction does the center of pressure move when the angle of attack changes?

1. Forward only
2. Rearward only
3. Fore and aft
4. Inboard and outboard

3-46. What does a shifting center of pressure do to a rotor blade?

1. It causes it to move fore and aft un- controllably
2. It causes it to move up and down un- controllably
3. It causes the pitch of the blades to stabilize
4. It causes increased lift capabilities

3-47. By what means is lift controlled in a helicopter?

1. By increasing and decreasing the engine speed
2. By increasing and decreasing the rotor speed
3. By increasing the pitch or angle of attack of the rotor blades

3-48. What term is used when a helicopters main rotor is turning and no lift is being produced by the rotor blades?

1. Angle of attack
2. Ground idle
3. Zero thrust
4. Flat pitch

3-49. Directional control of a helicopter is achieved by what means?

1. By tilting the helicopter in the desired direction
2. By tilting the main rotor in the desired direction
3. By increasing the pitch of the tail rotor blades
4. By decreasing the pitch of the tail rotor blades

3-50. By what means is hovering achieved in a helicopter?

1. By equalizing lift and drag only
2. By equalizing lift and thrust only
3. By equalizing thrust and weight only
4. By equalizing lift, drag, thrust, and weight

3-51. As the helicopter's rotor turns in one direction, the body of the helicopter tends to rotate in the opposite direction. What law or principle explains this action?

1. Newton's third law
2. Newton's second law
3. Newton's principle
4. Bernoulli's principle

3-52. What is the purpose of a tail rotor on a single main rotor helicopter?

1. Recognizing torque
2. Reducing vibration
3. Compensating for thrust
4. Eliminating torque reaction

3-53. In what direction does a tail rotor system produce thrust to compensate for the torque reaction developed by the main rotor?

1. Opposite
2. Same
3. Vertical
4. Radial

CHAPTER 4

AIRCRAFT BASIC CONSTRUCTION

INTRODUCTION

Naval aircraft are built to meet certain specified requirements. These requirements must be selected so they can be built into one aircraft. It is not possible for one aircraft to possess all characteristics; just as it isn't possible for an aircraft to have the comfort of a passenger transport and the maneuverability of a fighter. The type and class of the aircraft determine how strong it must be built. A Navy fighter must be fast, maneuverable, and equipped for attack and defense. To meet these requirements, the aircraft is highly powered and has a very strong structure.

The airframe of a fixed-wing aircraft consists of the following five major units:

1. Fuselage
2. Wings
3. Stabilizers
4. Flight controls surfaces
5. Landing gear

A rotary-wing aircraft consists of the following four major units:

1. Fuselage
2. Landing gear
3. Main rotor assembly
4. Tail rotor assembly

You need to be familiar with the terms used for aircraft construction to work in an aviation rating.

STRUCTURAL STRESS

LEARNING OBJECTIVE: Identify the five basic stresses acting on an aircraft.

The primary factors to consider in aircraft structures are strength, weight, and reliability. These factors determine the requirements to be met by any material used to construct or repair the aircraft. Airframes must be strong and light in weight. An aircraft built so heavy that it couldn't support more than a few hundred pounds of additional weight would be useless. All materials used to construct an aircraft must be reliable. Reliability minimizes the possibility of dangerous and unexpected failures.

Many forces and structural stresses act on an aircraft when it is flying and when it is static. When it is static, the force of gravity produces weight, which is supported by the landing gear. The landing gear absorbs the forces imposed on the aircraft by takeoffs and landings.

During flight, any maneuver that causes acceleration or deceleration increases the forces and stresses on the wings and fuselage.

Stresses on the wings, fuselage, and landing gear of aircraft are tension, compression, shear, bending, and torsion. These stresses are absorbed by each component of the wing structure and transmitted to the fuselage structure. The empennage (tail section) absorbs the same stresses and transmits them to the fuselage. These stresses are known as *loads*, and the study of loads is called a *stress analysis.* Stresses are analyzed and considered when an aircraft is designed. The stresses acting on an aircraft are shown in figure 4-1.

TENSION

Tension (fig. 4-1, view A) is defined as *pull*. It is the stress of stretching an object or pulling at its ends. Tension is the resistance to pulling apart or stretching produced by two forces pulling in opposite directions along the same straight line. For example, an elevator control cable is in additional tension when the pilot moves the control column.

COMPRESSION

If forces acting on an aircraft move toward each other to squeeze the material, the stress is called *compression*. Compression (fig. 4-1, view B) is the opposite of tension. Tension is **pull**, and compression is **push**. Compression is the resistance to crushing produced by two forces pushing toward each other in the same straight line. For example, when an airplane is on the ground, the landing gear struts are under a constant compression stress.

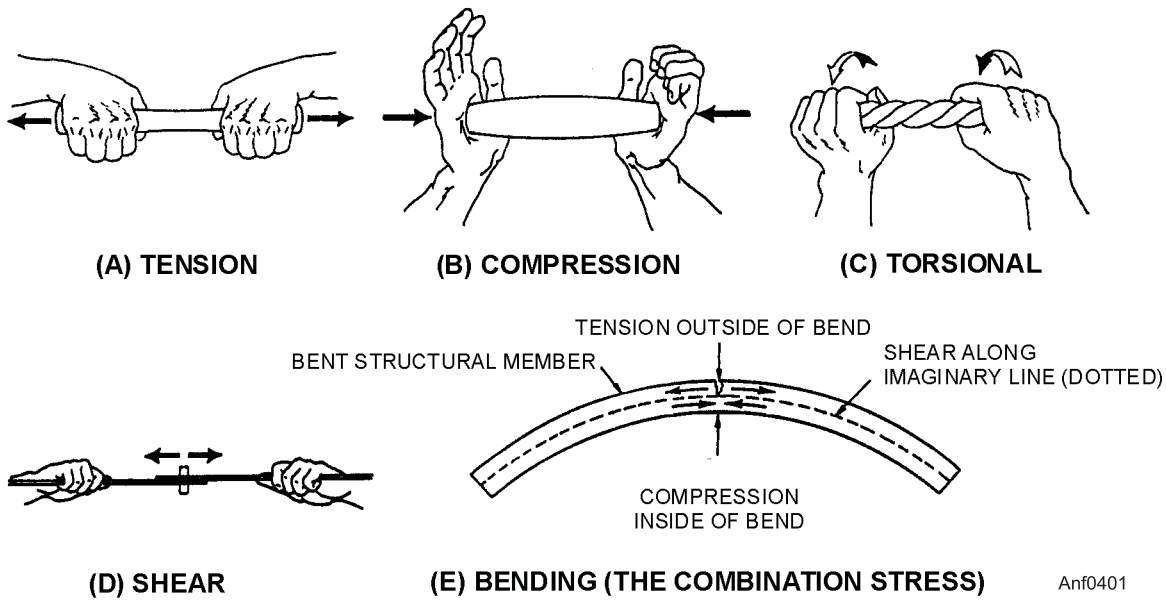

Figure 4-1.—Five stresses acting on an aircraft.

SHEAR

Cutting a piece of paper with scissors is an example of a shearing action. In an aircraft structure, shear (fig. 4-1, view D) is a stress exerted when two pieces of fastened material tend to separate. Shear stress is the outcome of sliding one part over the other in opposite directions. The rivets and bolts of an aircraft experience both shear and tension stresses.

BENDING

Bending (fig. 4-1, view E) is a combination of tension and compression. For example, when bending a piece of tubing, the upper portion stretches (tension) and the lower portion crushes together (compression). The wing spars of an aircraft in flight are subject to bending stresses.

TORSION

Torsional (fig. 4-1, view C) stresses result from a twisting force. When you wring out a chamois skin, you are putting it under torsion. Torsion is produced in an engine crankshaft while the engine is running. Forces that produce torsional stress also produce torque.

VARYING STRESS

All structural members of an aircraft are subject to one or more stresses. Sometimes a structural member has alternate stresses; for example, it is under compression one instant and under tension the next. The strength of aircraft materials must be great enough to withstand maximum force of varying stresses.

SPECIFIC ACTION OF STRESSES

You need to understand the stresses encountered on the main parts of an aircraft. A knowledge of the basic stresses on aircraft structures will help you understand why aircraft are built the way they are. The fuselage of an aircraft is subject the fives types of stress—torsion, bending, tension, shear, and compression.

Torsional stress in a fuselage is created in several ways. For example, torsional stress is encountered in engine torque on turboprop aircraft. Engine torque tends to rotate the aircraft in the direction opposite to the direction the propeller is turning. This force creates a torsional stress in the fuselage. Figure 4-2 shows the effect of the rotating propellers. Also, torsional stress on the fuselage is created by the action of the ailerons when the aircraft is maneuvered.

When an aircraft is on the ground, there is a bending force on the fuselage. This force occurs because of the weight of the aircraft. Bending increases when the aircraft makes a carrier landing. This bending action creates a tension stress on the lower skin of the fuselage and a compression stress on the top skin. Bending action is shown in figure 4-3. These stresses are transmitted to the fuselage when the aircraft is in flight. Bending occurs because of the reaction of the airflow against the wings and empennage. When the

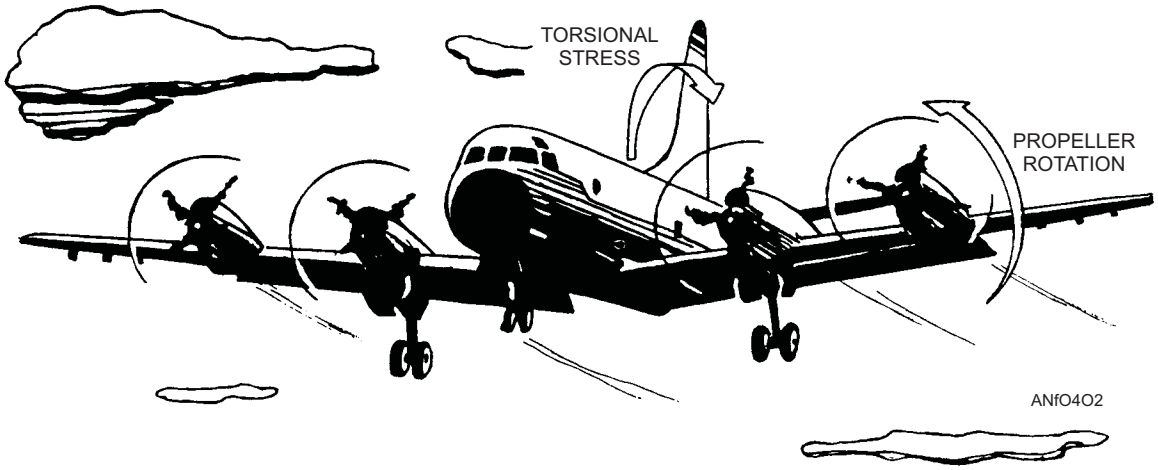

Figure 4-2.—Engine torque creates torsion stress in aircraft fuselages.

aircraft is in flight, lift forces act upward against the wings, tending to bend them upward. The wings are prevented from folding over the fuselage by the resisting strength of the wing structure. The bending action creates a tension stress on the bottom of the wings and a compression stress on the top of the wings.

Q4-1. The resistance to pulling apart or stretching produced by two forces pulling in opposite directions along the same straight lines is defined by what term?

Q4-2. The resistance to crushing produced by two forces pushing toward each other in the same straight line is defined by what term?

Q4-3. Define the term shear as it relates to an aircraft structure.

Q4-4. Define the term bending.

Q4-5. Define the term torsion.

CONSTRUCTION MATERIALS

LEARNING OBJECTIVE: Identify the various types of metallic and nonmetallic materials used in aircraft construction.

An aircraft must be constructed of materials that are both light and strong. Early aircraft were made of wood. Lightweight metal alloys with a strength greater than wood were developed and used on later aircraft. Materials currently used in aircraft construction are classified as either metallic materials or nonmetallic materials.

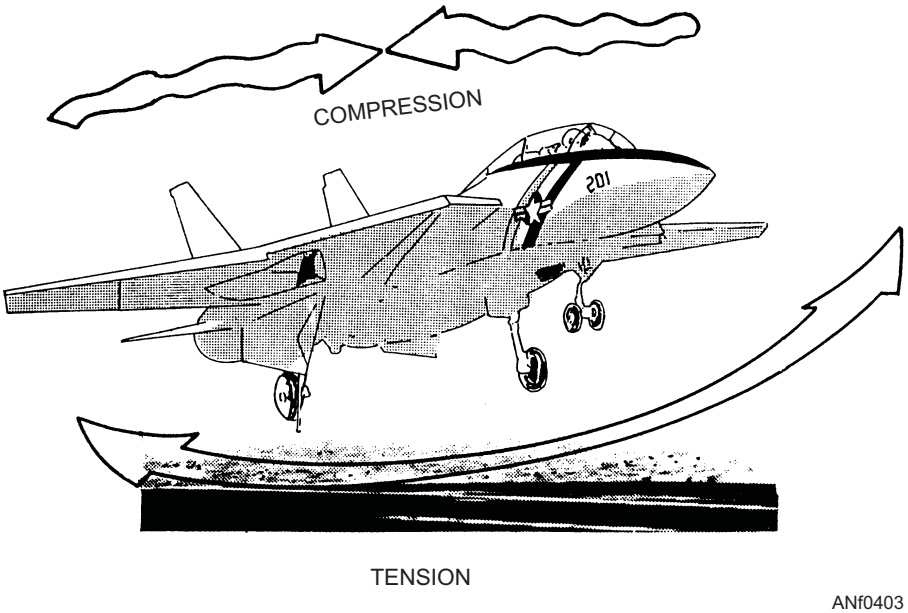

Figure 4-3.—Bending action occurring during carrier landing.

METALLIC MATERIALS

The most common metals used in aircraft construction are aluminum, magnesium, titanium, steel, and their alloys.

Aluminum

Aluminum alloys are widely used in modern aircraft construction. Aluminum alloys are valuable because they have a high strength-to-weight ratio. Aluminum alloys are corrosion resistant and comparatively easy to fabricate. The outstanding characteristic of aluminum is its lightweight.

Magnesium

Magnesium is the world's lightest structural metal. It is a silvery-white material that weighs two-thirds as much as aluminum. Magnesium is used to make helicopters. Magnesium's low resistance to corrosion has limited its use in conventional aircraft.

Titanium

Titanium is a lightweight, strong, corrosion-resistant metal. Recent developments make titanium ideal for applications where aluminum alloys are too weak and stainless steel is too heavy. Additionally, titanium is unaffected by long exposure to seawater and marine atmosphere.

Alloys

An alloy is composed of two or more metals. The metal present in the alloy in the largest amount is called the *base metal*. All other metals added to the base metal are called *alloying elements*. Adding the alloying elements may result in a change in the properties of the base metal. For example, pure aluminum is relatively soft and weak. However, adding small amounts or copper, manganese, and magnesium will increase aluminum's strength many times. Heat treatment can increase or decrease an alloy's strength and hardness. Alloys are important to the aircraft industry. They provide materials with properties that pure metals do not possess.

Steel Alloys

Alloy steels used in aircraft construction have great strength, more so than other fields of engineering would require. These materials must withstand the forces that occur on today's modern aircraft. These steels contain small percentages of carbon, nickel, chromium, vanadium, and molybdenum. High-tensile steels will stand stress of 50 to 150 tons per square inch without failing. Such steels are made into tubes, rods, and wires.

Another type of steel used extensively is stainless steel. Stainless steel resists corrosion and is particularly valuable for use in or near water.

NONMETALLIC MATERIALS

In addition to metals, various types of plastic materials are found in aircraft construction. Some of these plastics include transparent plastic, reinforced plastic, composite, and carbon-fiber materials.

Transparent Plastic

Transparent plastic is used in canopies, windshields, and other transparent enclosures. You need to handle transparent plastic surfaces carefully because they are relatively soft and scratch easily. At approximately 225°F, transparent plastic becomes soft and pliable.

Reinforced Plastic

Reinforced plastic is used in the construction of radomes, wingtips, stabilizer tips, antenna covers, and flight controls. Reinforced plastic has a high strength-to-weight ratio and is resistant to mildew and rot. Because it is easy to fabricate, it is equally suitable for other parts of the aircraft.

Reinforced plastic is a sandwich-type material (fig. 4-4). It is made up of two outer facings and a center layer. The facings are made up of several layers of glass cloth, bonded together with a liquid resin. The core material (center layer) consists of a honeycomb

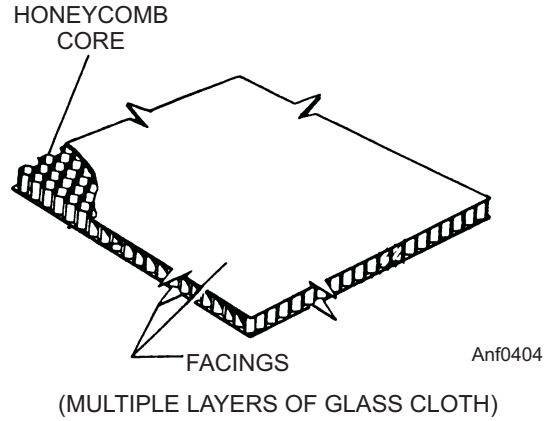

Figure 4-4.—Reinforced plastic.

structure made of glass cloth. Reinforced plastic is fabricated into a variety of cell sizes.

Composite and Carbon Fiber Materials

High-performance aircraft require an extra high strength-to-weight ratio material. Fabrication of composite materials satisfies this special requirement. Composite materials are constructed by using several layers of bonding materials (graphite epoxy or boron epoxy). These materials are mechanically fastened to conventional substructures. Another type of composite construction consists of thin graphite epoxy skins bonded to an aluminum honeycomb core. Carbon fiber is extremely strong, thin fiber made by heating synthetic fibers, such as rayon, until charred, and then layering in cross sections.

Q4-6. Materials currently used in aircraft construction are classified as what type of materials?

Q4-7. What are the most common metallic materials used in aircraft construction?

Q4-8. What are the nonmetallic materials used in aircraft construction?

FIXED-WING AIRCRAFT

LEARNING OBJECTIVE: Identify the construction features of the fixed-wing aircraft and identify the primary, secondary, and auxiliary flight control surfaces.

The principal structural units of a fixed-wing aircraft are the fuselage, wings, stabilizers, flight control surfaces, and landing gear. Figure 4-5 shows these units of a naval aircraft.

NOTE: The terms *left* or *right* used in relation to any of the structural units refer to the right or left hand of the pilot seated in the cockpit.

FUSELAGE

The fuselage is the main structure, or body, of the aircraft. It provides space for personnel, cargo, controls, and most of the accessories. The power plant, wings, stabilizers, and landing gear are attached to it.

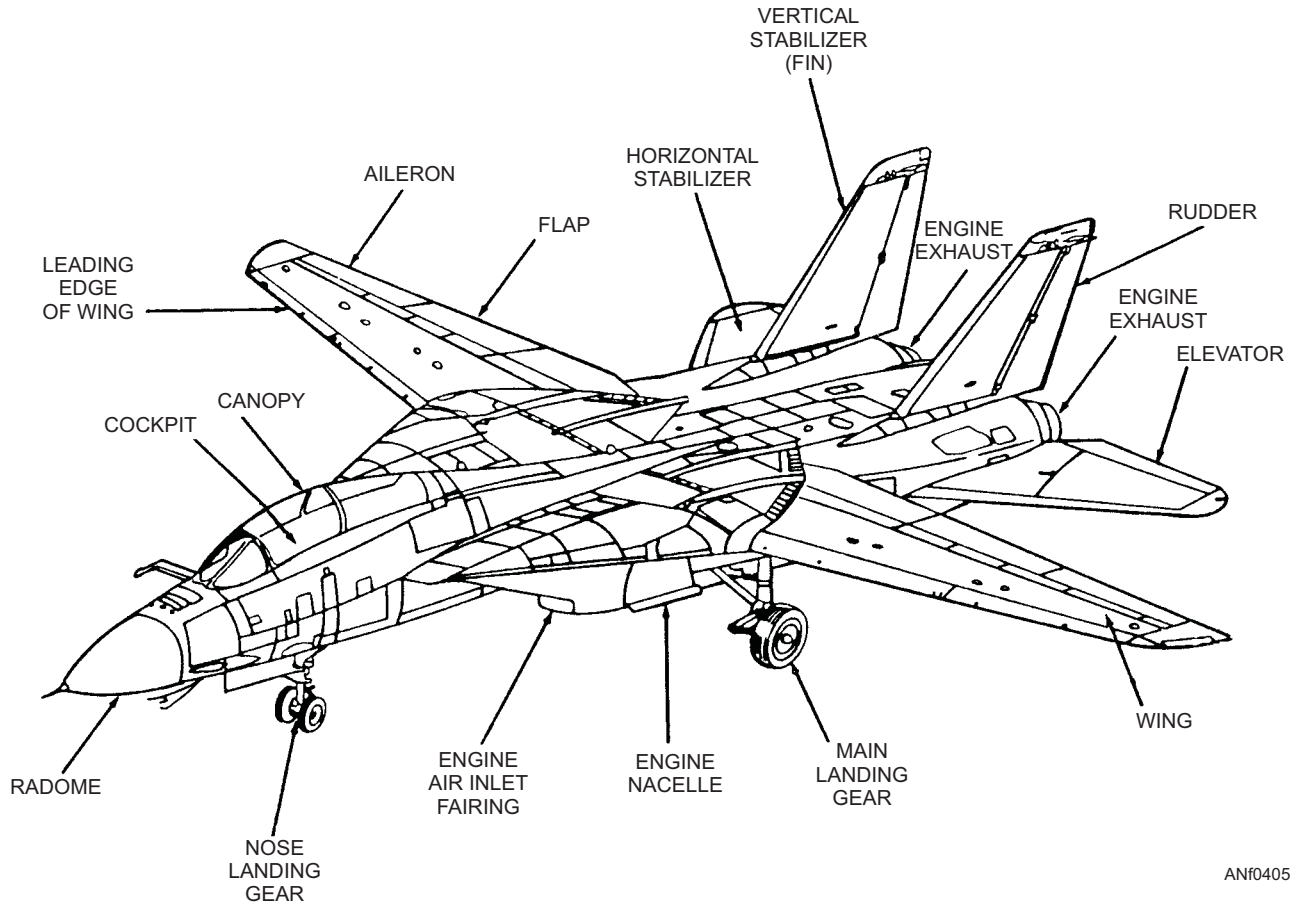

Figure 4-5.—Principal structural units on an F-14 aircraft.

There are two general types of fuselage construction—welded steel truss and monocoque designs. The welded steel truss was used in smaller Navy aircraft, and it is still being used in some helicopters.

The monocoque design relies largely on the strength of the skin, or covering, to carry various loads. The monocoque design may be divided into three classes—monocoque, semimonocoque, and reinforced shell.

- The true monocoque construction uses formers, frame assemblies, and bulkheads to give shape to the fuselage. However, the skin carries the primary stresses. Since no bracing members are present, the skin must be strong enough to keep the fuselage rigid. The biggest problem in monocoque construction is maintaining enough strength while keeping the weight within limits.
- Semimonocoque design overcomes the strength-to-weight problem of monocoque construction. See figure 4-6. In addition to having formers, frame assemblies, and bulkheads, the semimonocoque construction has the skin reinforced by longitudinal members.
- The reinforced shell has the skin reinforced by a complete framework of structural members. Different portions of the same fuselage may belong to any one of the three classes. Most are considered to be of semimonocoque-type construction.

The semimonocoque fuselage is constructed primarily of aluminum alloy, although steel and titanium are found in high-temperature areas. Primary bending loads are taken by the longerons, which usually extend across several points of support. The longerons are supplemented by other longitudinal members known as *stringers*. Stringers are more numerous and lightweight than longerons.

The vertical structural members are referred to as *bulkheads*, *frames*, and *formers*. The heavier vertical members are located at intervals to allow for concentrated loads. These members are also found at points where fittings are used to attach other units, such as the wings and stabilizers.

The stringers are smaller and lighter than longerons and serve as fill-ins. They have some rigidity but are chiefly used for giving shape and for attachment of skin. The strong, heavy longerons hold the bulkheads and formers. The bulkheads and formers hold the stringers. All of these join together to form a rigid fuselage framework. Stringers and longerons prevent tension and compression stresses from bending the fuselage.

The skin is attached to the longerons, bulkheads, and other structural members and carries part of the load. The fuselage skin thickness varies with the load carried and the stresses sustained at particular location.

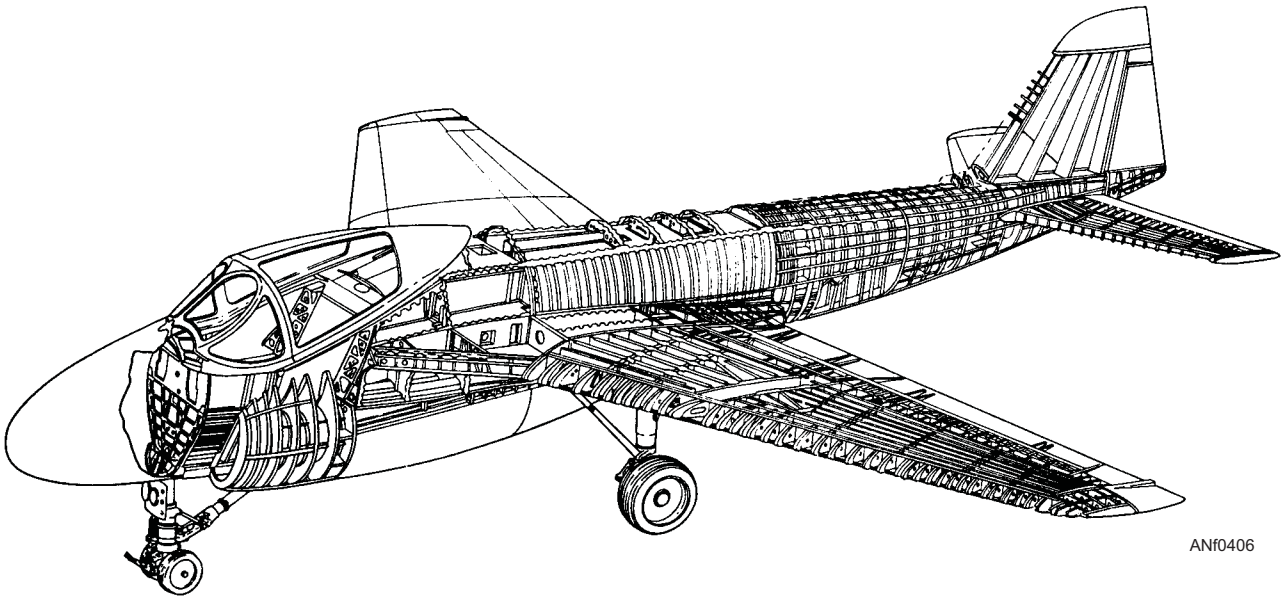

Figure 4-6.—Semimonocoque fuselage construction.

There are a number of advantages in using the semimonocoque fuselage.

- The bulkhead, frames, stringers, and longerons aid in the design and construction of a streamlined fuselage. They add to the strength and rigidity of the structure.
- The main advantage of the semimonocoque construction is that it depends on many structural members for strength and rigidity. Because of its stressed skin construction, a semimonocoque fuselage can withstand damage and still be strong enough to hold together.

Points on the fuselage are located by station numbers. Station 0 is usually located at or near the nose of the aircraft. The other stations are located at measured distances (in inches) aft of station 0. A typical station diagram is shown in figure 4-7. On this particular aircraft, fuselage station (FS) 0 is located 93.0 inches forward of the nose.

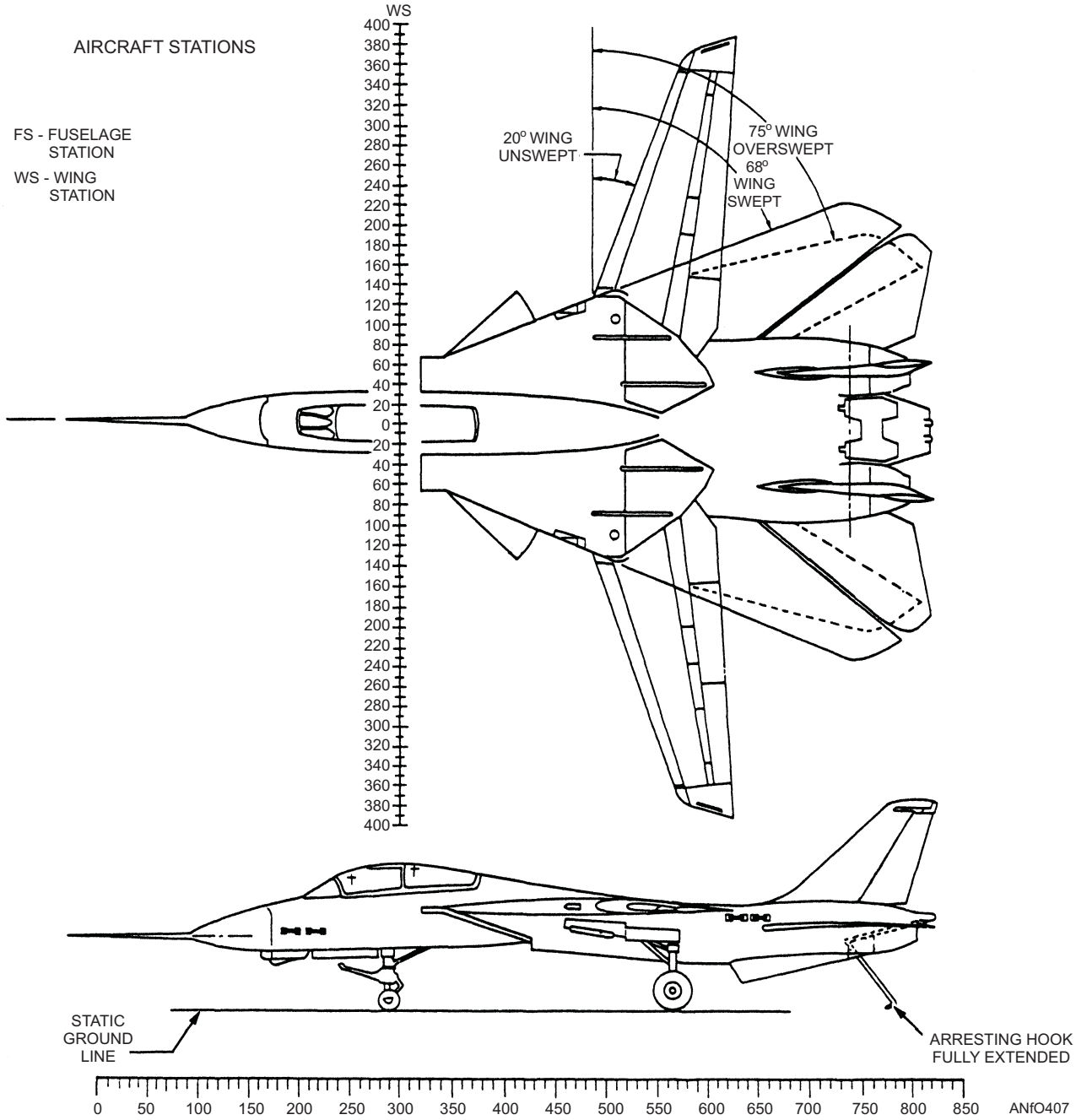

Figure 4-7.—Fuselage station diagram of an F-14 aircraft.

WINGS

Wings develop the major portion of the lift of a heavier-than-air aircraft. Wing structures carry some of the heavier loads found in the aircraft structure. The particular design of a wing depends on many factors, such as the size, weight, speed, rate of climb, and use of the aircraft. The wing must be constructed so that it holds its aerodynamics shape under the extreme stresses of combat maneuvers or wing loading.

Wing construction is similar in most modern aircraft. In its simplest form, the wing is a framework made up of spars and ribs and covered with metal. The construction of an aircraft wing is shown in figure 4-8.

Spars are the main structural members of the wing. They extend from the fuselage to the tip of the wing. All the load carried by the wing is taken up by the spars. The spars are designed to have great bending strength. Ribs give the wing section its shape, and they transmit the air load from the wing covering to the spars. Ribs extend from the leading edge to the trailing edge of the wing.

In addition to the main spars, some wings have a false spar to support the ailerons and flaps. Most aircraft wings have a removable tip, which streamlines the outer end of the wing.

Most Navy aircraft are designed with a wing referred to as a *wet wing*. This term describes the wing that is constructed so it can be used as a fuel cell. The wet wing is sealed with a fuel-resistant compound as it is built. The wing holds fuel without the usual rubber cells or tanks.

The wings of most naval aircraft are of all metal, full cantilever construction. Often, they may be folded for carrier use. A full cantilever wing structure is very strong. The wing can be fastened to the fuselage without the use of external bracing, such as wires or struts.

A complete wing assembly consists of the surface providing lift for the support of the aircraft. It also provides the necessary flight control surfaces.

NOTE: The flight control surfaces on a simple wing may include only ailerons and trailing edge flaps. The more complex aircraft may have a variety of devices, such as leading edge flaps, slats, spoilers, and speed brakes.

Various points on the wing are located by wing station numbers (fig. 4-7). Wing station (WS) 0 is located at the centerline of the fuselage, and all wing stations are measured (right or left) from this point (in inches).

STABILIZERS

The stabilizing surfaces of an aircraft consist of vertical and horizontal airfoils. They are called the

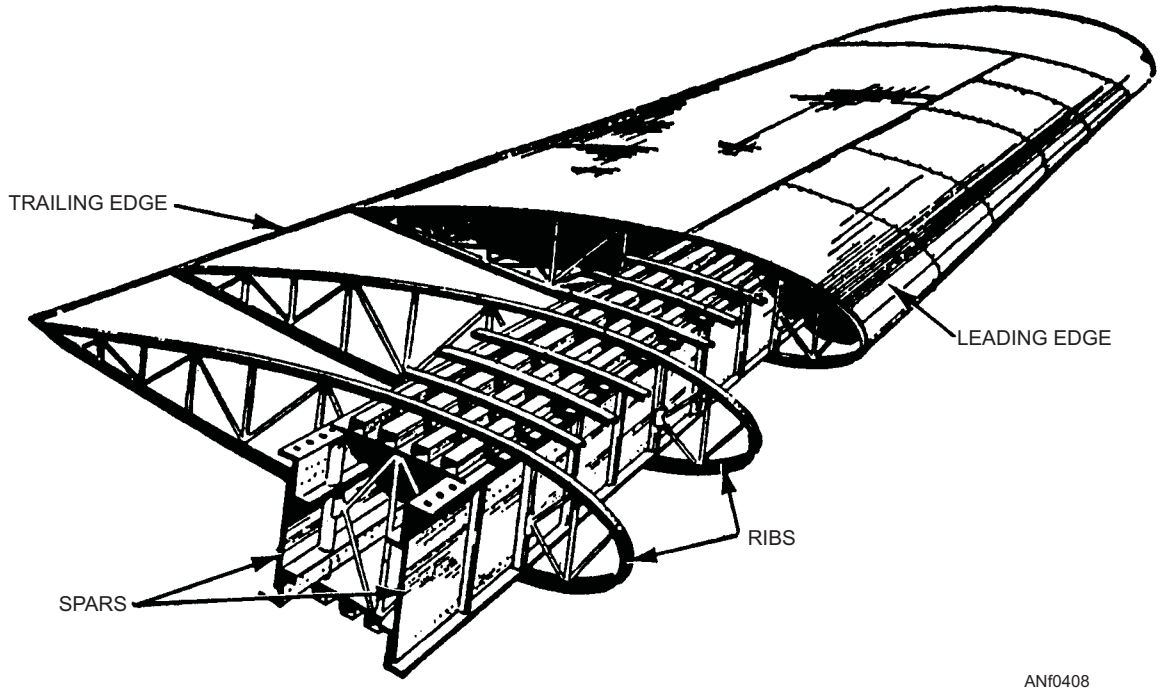

Figure 4-8.—Two-spar wing construction.

vertical stabilizer (or *fin*) and *horizontal stabilizer*. These two airfoils, along with the rudder and elevators, form the tail section. For inspection and maintenance purposes, the entire tail section is considered a single unit called the *empennage*.

The main purpose of stabilizers is to keep the aircraft in straight-and-level flight. The vertical stabilizer maintains the stability of he aircraft about its vertical axis (fig. 4-9). This is known as *directional stability.* The vertical stabilizer usually serves as the base to which the rudder is attached. The horizontal stabilizer provides stability of the aircraft about its lateral axis. This is known as *longitudinal stability.* The horizontal stabilizer usually serves as the base to which the elevators are attached. On many newer, high-performance aircraft, the entire vertical and/or horizontal stabilizer is a movable airfoil. Without the movable airfoil, the flight control surfaces would lose their effectiveness at extremely high altitudes.

Stabilizer construction is similar to wing construction. For greater strength, especially in the thinner airfoil sections typical of trailing edges, a honeycomb-type construction is used. Some larger carrier-type aircraft have vertical stabilizers that are folded hydraulically to aid aircraft movement aboard aircraft carriers.

FLIGHT CONTROL SURFACES

Flight control surfaces are hinged (movable) airfoils designed to change the attitude of the aircraft during flight. These surfaces are divided into three groups—primary, secondary, and auxiliary.

Primary Group

The primary group of flight control surfaces includes ailerons, elevators, and rudders. The ailerons attach to the trailing edge of the wings. They control the rolling (or banking) motion of the aircraft. This action is known as *longitudinal control*.

The elevators are attached to the horizontal stabilizer and control the climb or descent (pitching motion) of the aircraft. This action is known as *lateral control*.

The rudder is attached to the vertical stabilizer. It determines the horizontal flight (turning or yawing motion) of the aircraft. This action is known as *directional control*.

The ailerons and elevators are operated from the cockpit by a control stick on single-engine aircraft. A yoke and wheel assembly operates the ailerons and elevators on multiengine aircraft, such as transport and

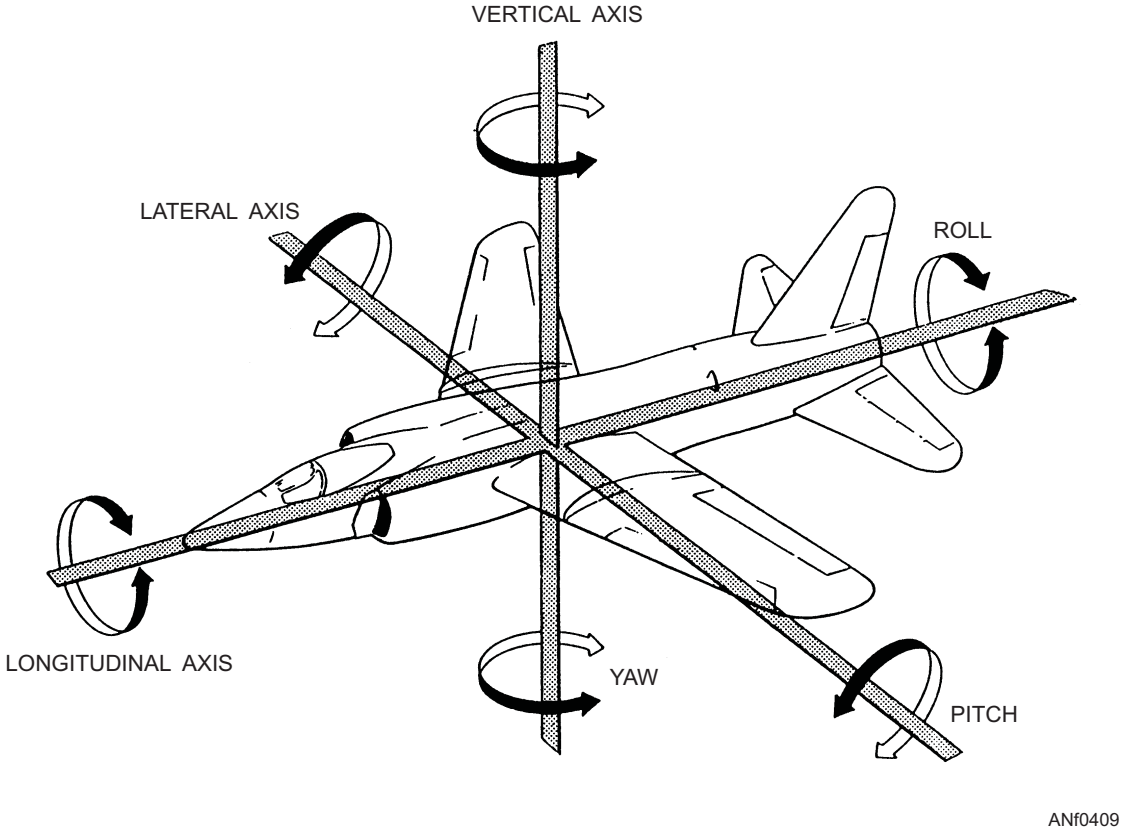

Figure 4-9.—Axes and fundamental movements of the aircraft.

patrol aircraft. The rudder is operated by foot pedals on all types of aircraft.

Secondary Group

The secondary group includes the trim tabs and spring tabs. Trim tabs are small airfoils recessed into the trailing edges of the primary control surface. Each trim tab hinges to its parent primary control surface, but operates by an independent control. Trim tabs let the pilot trim out an unbalanced condition without exerting pressure on the primary controls.

Spring tabs are similar in appearance to trim tabs but serve an entirely different purpose. Spring tabs are used for the same purpose as hydraulic actuators. They aid the pilot in moving a larger control surface, such as the ailerons and elevators.

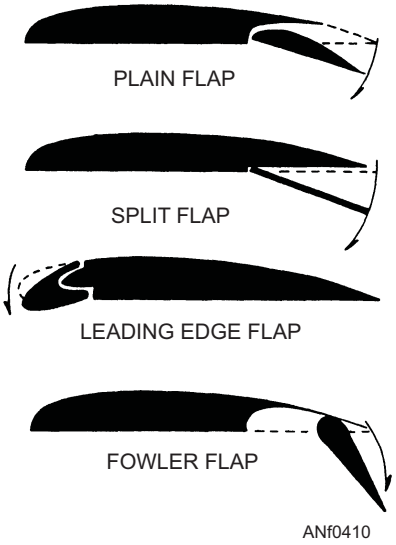

Figure 4-10.—Types of flaps.

Auxiliary Group

The auxiliary group includes the wing flaps, spoilers, speed brakes, and slats.

WING FLAPS.—Wing flaps give the aircraft extra lift. Their purpose is to reduce the landing speed. Reducing the landing speed shortens the length of the landing rollout. Flaps help the pilot land in small or obstructed areas by increasing the glide angle without greatly increasing the approach speed. The use of flaps during takeoff serves to reduce the length of the takeoff run.

Some flaps hinge to the lower trailing edges of the wings inboard of the ailerons. Leading edge flaps are used on the F-14 *Tomcat* and F/A-18 *Hornet*. Four types of flaps are shown in figure 4-10. The **plain flap** forms the trailing edge of the airfoil when the flap is in the up position. In the **split flap**, the trailing edge of the airfoil is split, and the lower half is hinged and lowers to form the flap. The **fowler flap** operates on rollers and tracks, causing the lower surface of the wing to roll out and then extend downward. The **leading edge flap** operates like the plain flap. It is hinged on the bottom side. When actuated, the leading edge of the wing actually extends in a downward direction to increase the camber of the wing. Landing flaps are used in conjunction with other types of flaps.

SPOILERS.—Spoilers are used to decrease wing lift. The specific design, function, and use vary with different aircraft. On some aircraft, the spoilers are long narrow surfaces, hinged at their leading edge to the upper surfaces of the wings. In the retracted position, they are flush with the wing skin. In the raised position, they greatly reduce wing lift by destroying the smooth flow of air over the wing surface.

SPEED BRAKES.—Speed brakes are movable control surfaces used for reducing the speed of the aircraft. Some manufacturers refer to them as *dive brakes*; others refer to them as *dive flaps*. On some aircraft, they're hinged to the sides or bottom of the fuselage. Regardless of their location, speed brakes serve the same purpose—to keep the airspeed from building too high when the aircraft dives. Speed brakes slow the aircraft's speed before it lands.

SLATS.—Slats are movable control surfaces that attach to the leading edge of the wing. When the slat is retracted, it forms the leading edge of the wing. When the slat is open (extended forward), a slot is created between the slat and the wing leading edge. High-energy air is introduced into the boundary layer over the top of the wing. At low airspeeds, this action improves the lateral control handling characteristics. This allows the aircraft to be controlled at airspeeds below normal landing speed. The high-energy air that flows over the top of the wing is known as *boundary layer control air.* Boundary layer control is intended primarily for use during operations from carriers. Boundary layer control air aids in catapult takeoffs and arrested landings. Boundary control air can also be accomplished by directing high-pressure engine bleed air across the top of the wing or flap surface.

Figure 4-11.—Push-pull tube assembly.

FLIGHT CONTROL MECHANISMS

The term *flight control* refers to the linkage that connects the control(s) in the cockpit with the flight control surfaces. There are several types of flight controls in naval aircraft; some are manually operated while others are power operated.

Manually operated flight control mechanisms are further divided into three groups—cable operated, push-pull tube operated, and torque tube operated. Some systems may combine two or more of these types.

In the **manually operated cable system**, cables are connected from the control in the cockpit to a bell crank or sector. The bell crank is connected to the control surface. Movement of the cockpit controls transfers force through the cable to the bell crank, which moves the control surface.

In a **push-pull tube system**, metal push-pull tubes (or rods) are used as a substitute for the cables (fig. 4-11). Push-pull tubes get their name from the way they transmit force.

In the **torque tube system**, metal tubes (rods) with gears at the ends of the tubes are used. Motion is transmitted by rotating the tubes and gears.

On all high-performance aircraft, the control surfaces have great pressure exerted on them. At high airspeed, it is physically impossible for the pilot to move the controls manually. As a result, power-operated control mechanisms are used. In a power-operated system, a hydraulic actuator (cylinder) is located within the linkage to assist the pilot in moving the control surface.

A typical flight control mechanism is shown in figure 4-12. This is the elevator control of a lightweight trainer-type aircraft. It consists of a combination of push-pull tubes and cables.

The control sticks in the system shown in figure 4-12 are connected to the forward sector by push-pull tubes. The forward sector is connected to the aft (rear) sector by means of cable assemblies. The aft sector is connected to the flight control by another push-pull tube assembly.

LANDING GEAR

Before World War II, aircraft were made with their main landing gear located behind the center of gravity. An auxiliary gear under the fuselage nose was added. This arrangement became known as the *tricycle type of landing gear.* Nearly all present-day Navy aircraft are equipped with tricycle landing gear. The tricycle gear has the following advantages over older landing gear:

- More stable in motion on the ground
- Maintains the fuselage in a level position
- Increases the pilot's visibility and control
- Makes landing easier, especially in cross winds

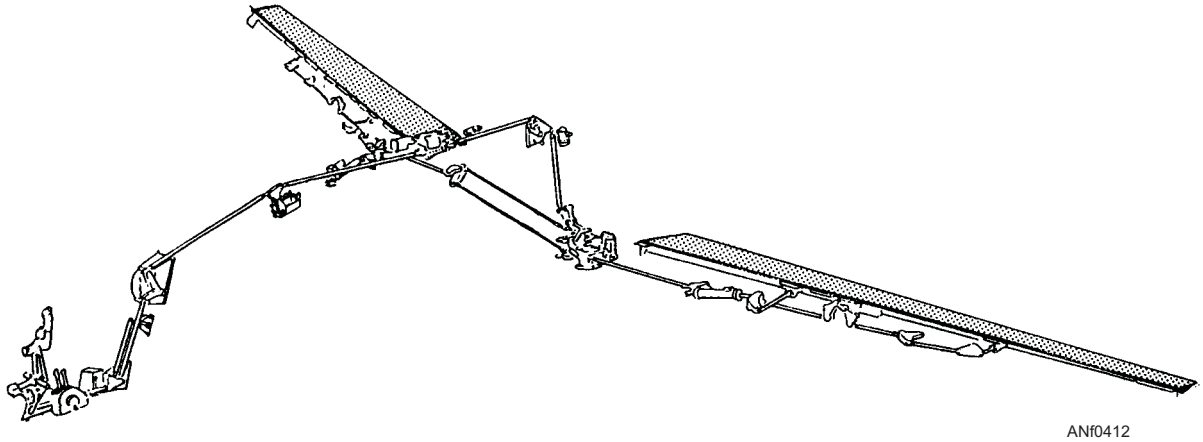

Figure 4-12.—Typical flight control mechanism.

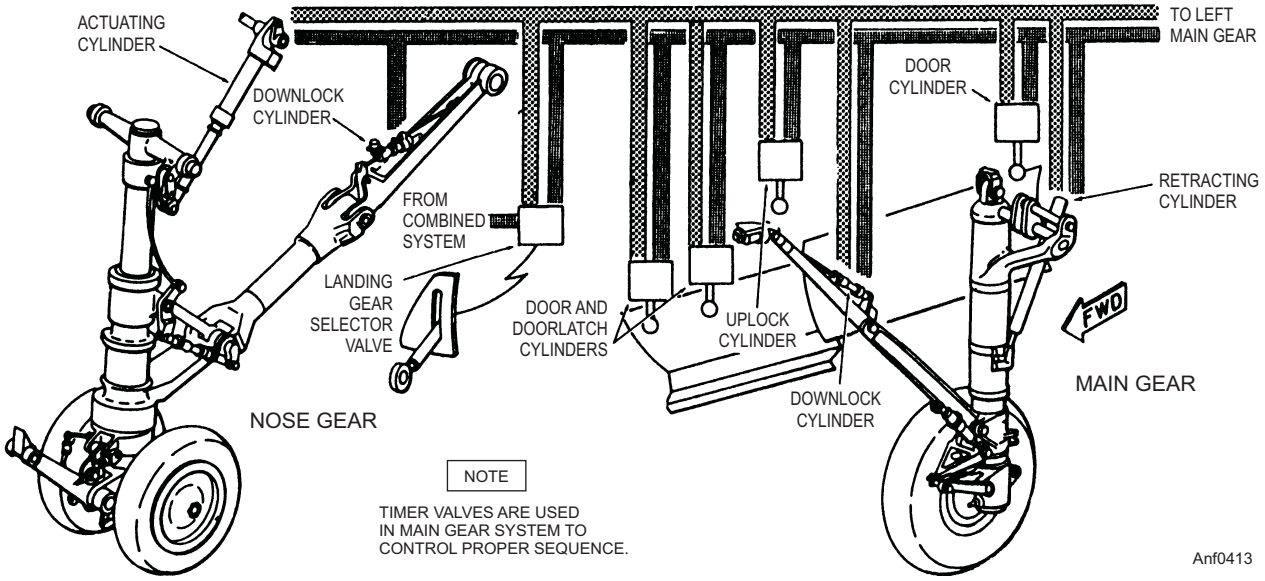

Figure 4-13.—Typical landing gear system.

The landing gear system (fig. 4-13) consists of three retractable landing gear assemblies. Each main landing gear has a conventional air-oil shock strut, a wheel brake assembly, and a wheel and tire assembly. The nose landing gear has a conventional air-oil shock strut, a shimmy damper, and a wheel and tire assembly.

The shock strut is designed to absorb the shock that would otherwise be transmitted to the airframe during landing, taxiing, and takeoff. The air-oil strut is used on all naval aircraft. This type of strut has two telescoping cylinders filled with hydraulic fluid and compressed air or nitrogen. Figure 4-14 shows the internal construction of one type of air-oil shock strut.

The main landing gear is equipped with brakes for stopping the aircraft and assisting the pilot in steering the aircraft on the ground.

The nose gear of most aircraft can be steered from the cockpit. This provides greater ease and safety on the runway when landing and taking off and on the taxiway in taxiing.

ARRESTING GEAR

A carrier-type aircraft is equipped with an arresting hook for stopping the aircraft when it lands on the carrier. The arresting gear has an extendible hook and the mechanical, hydraulic, and pneumatic equipment necessary for hook operation. See figure 4-15. The arresting hook on most aircraft releases mechanically, lowers pneumatically, and raises hydraulically.

The hook hinges from the structure under the rear of the aircraft. A snubber meters hydraulic fluid and works in conjunction with nitrogen pressure. The

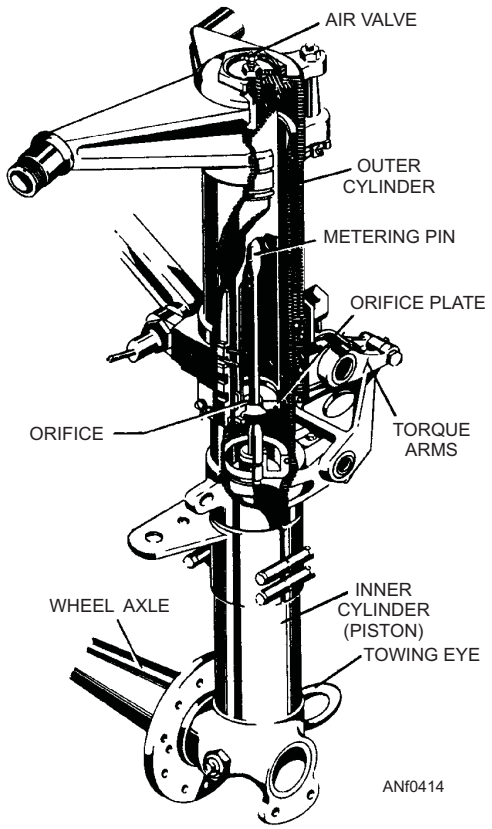

Figure 4-14.—Internal construction of a shock strut.

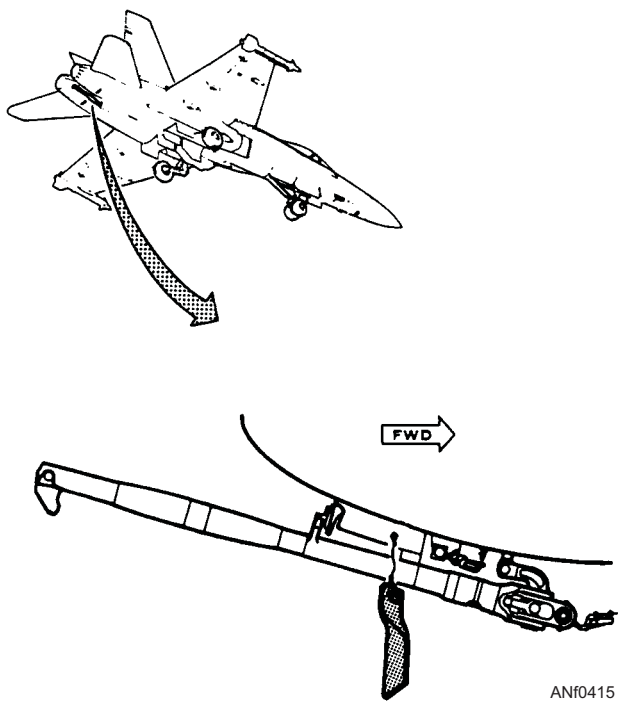

Figure 4-15.—Arresting gear installation.

snubber holds the hook down and prevents it from bouncing when it strikes the carrier deck.

CATAPULT EQUIPMENT

Carrier aircraft have built-in equipment for catapulting off the aircraft carrier. Older aircraft had hooks on the airframe that attached to the cable bridle. The bridle hooks the aircraft to the ship's catapult. Newer aircraft have a launch bar built into the nose landing gear assembly. See figure 4-16. The holdback assembly allows the aircraft to be secured to the carrier deck for full-power turnup of the engine prior to takeoff. For nose gear equipment, a track attaches to the deck to guide the nosewheel into position. The track has provisions for attaching the nose gear to the catapult shuttle and for holdback.

NOTE: The holdback tension bar separates when the catapult is fired, allowing the aircraft to be launched with the engine at full power.

Q4-9. In fuselage construction, what are the three classes of monocoque design?

Q4-10. Points on the fuselage are located by what method?

Q4-11. In an aircraft, what are the main structural members of the wing?

Q4-12. What does the term "wet wing" mean?

Q4-13. The stabilizing surfaces of an aircraft consist of what two airfoils?

Q4-14. What are the three groups of flight control surfaces?

Q4-15. What is the purpose of speed brakes on an aircraft?

Q4-16. Most present-day Navy aircraft are equipped with what type of landing gear?

ROTARY-WING AIRCRAFT

LEARNING OBJECTIVE: Identify the construction features of the rotary-wing aircraft and recognize the fundamental differences between rotary-wing and fixed-wing aircraft.

Within the past 20 years, helicopters have become a reality, and are found throughout the world. They perform countless tasks suited to their unique capabilities.

A helicopter has one or more power-driven horizontal airscrews (rotors) to develop lift and propulsion. If a single main rotor is used, it is necessary to employ a means to counteract torque. If more than one main rotor (or tandem) is used, torque is eliminated by turning each main rotor in opposite directions.

The fundamental advantage the helicopter has over fixed-wing aircraft is that lift and control are independent of forward speed. A helicopter can fly forward, backward, or sideways, or it can remain in stationary flight (hover) above the ground. No runway is required for a helicopter to take off or land. For example, the roof of an office building is an adequate landing area. The helicopter is considered a safe aircraft because the takeoff and landing speed is zero, and it has autorotational capabilities. This allows a controlled descent with rotors turning in case of engine failure in flight.

FUSELAGE

Like the fuselage of a fixed-wing aircraft, the helicopter fuselage may be welded truss or some form of monocoque construction. Many Navy helicopters are of the monocoque design.

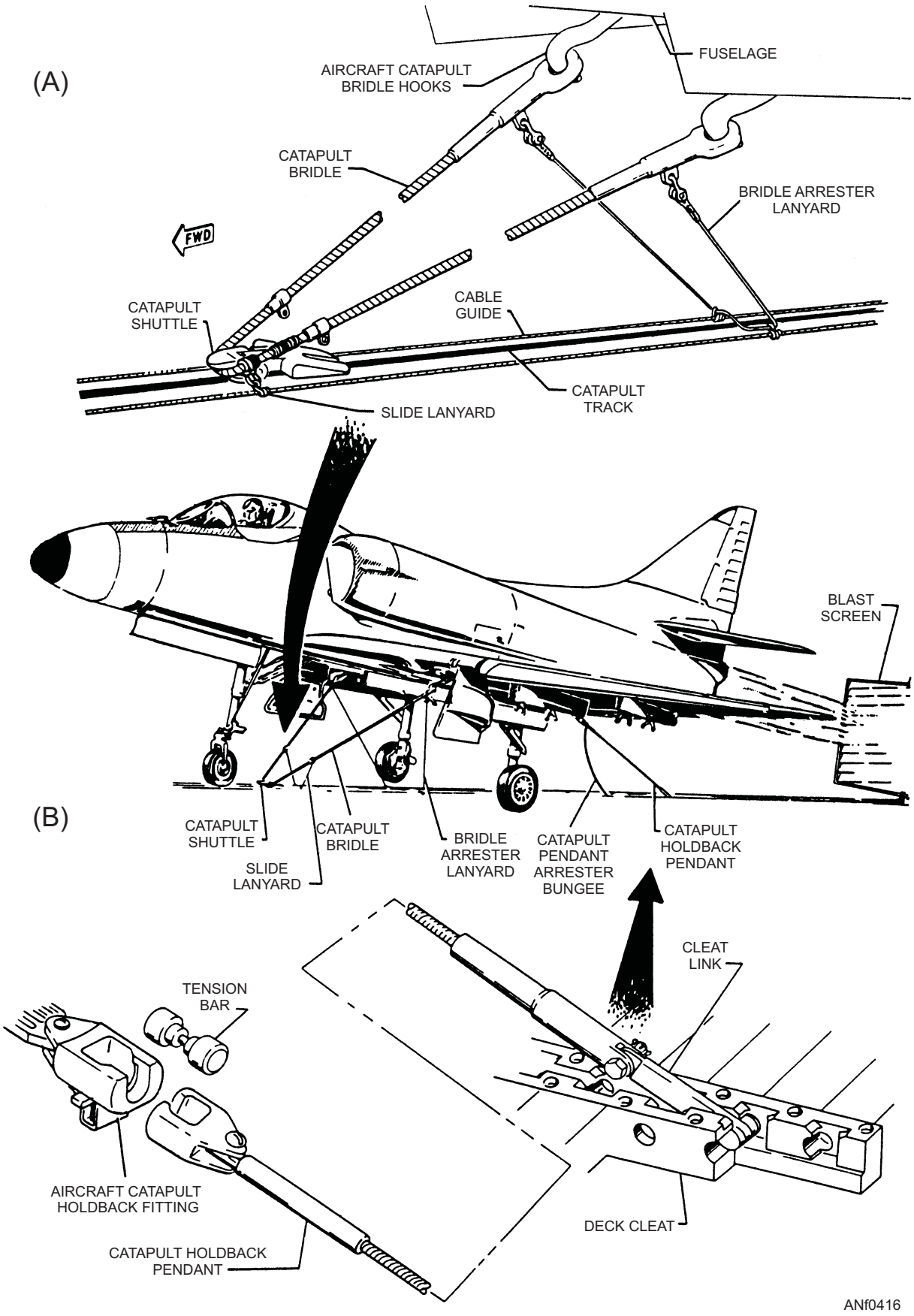

Figure 4-16.—Aircraft catapult equipment.

A typical Navy helicopter, the H-60, is shown in figure 4-17. Some of its features include a single main rotor, twin engine, tractor-type canted tail rotor, controllable stabilizer, fixed landing gear, rescue hoist, external cargo hook, and weapons pylons. The fuselage consists of the entire airframe, sometimes known as the *body group*.

The body group is an all-metal semimonocoque construction. It consists of an aluminum and titanium skin over a reinforced aluminum frame.

LANDING GEAR GROUP

The landing gear group includes all the equipment necessary to support the helicopter when it is not in flight. There are several types of landing gear on helicopters—conventional fixed (skid type), retractable, and nonretractable.

Main Landing Gear

The H-60's nonretracting main landing gear consists of two single axle, air/oil type of shock-strut assemblies that mount to the fuselage. Each is equipped with tubeless tires, hydraulic disc brakes, tie-down rings, drag braces, and safety switches. They are part of the lower end of the shock strut piston.

Tail Landing Gear

The H-60's tail landing gear is a nonretracting, dual wheel, 360-degree swiveling type. It is equipped with tubeless tires, tie-down ring, shimmy damper, tail-wheel lock, and an air/oil shock-strut, which serves as an aft touchdown point for the pilots to cushion the landing shock.

MAIN ROTOR ASSEMBLY

The main rotor (rotor wing) and rotor head (hub assembly) are identical in theory of flight but differ in engineering or design. They are covered here because their functions are closely related. The power plant, transmission, drive-train, hydraulic flight control, and rotor systems all work together. Neither has a function without the other.

Rotary Wing

The main rotor on the H-60 (fig. 4-17) has four identical wing blades. Other types of helicopters may

Figure 4-17.—H-60 helicopter.

have two, four, five, six, or seven blades. Figure 4-18 shows some typical rotor blades.

Rotary-wing blades are made of titanium, aluminum alloys, fiber glass, graphite, honeycomb core, nickel, and steel. Each has a nitrogen-filled, pressurized, hollow internal spar, which runs the length of the blade. The cuff provides the attachment of the blade to the rotor hub. A titanium abrasion strip covers the entire leading edge of the spar from the cuff end to the removable blade tip faring. This extends the life of the rotor blade.

The examples shown in figure 4-18 show other features—trim tabs, deicing protection, balance markings, and construction.

Main Rotor Head/Hub Assembly

The rotor head is fully articulating and is rotated by torque from the engines through the drive train and main gearbox or transmission. The flight controls and hydraulic servos transmit movements to the rotor blades. The principal components of the rotor head are the hub and swashplate assemblies (fig. 4-19). The **hub** is one piece, made of titanium and sits on top of the rotor mast. Attaching components are the sleeve and spindles, blade fold components, vibration absorber, bearings, blade dampers, pitch change horns, adjustable pitch control rods, blade fold hinges, balance weights, antiflapping and droop stops, and faring.

The **swashplate** consists of a rotating disc (upper), stationary (lower) portion with a scissors and sleeve assembly separated by a bearing. The swashplate is permitted to slide on the main rotor vertical driveshaft and mounts on top the main transmission. The entire assembly can tilt in any direction following the motion of the flight controls.

The hydraulic servo cylinders, swashplate, and adjustable pitch control rods permit movement of the

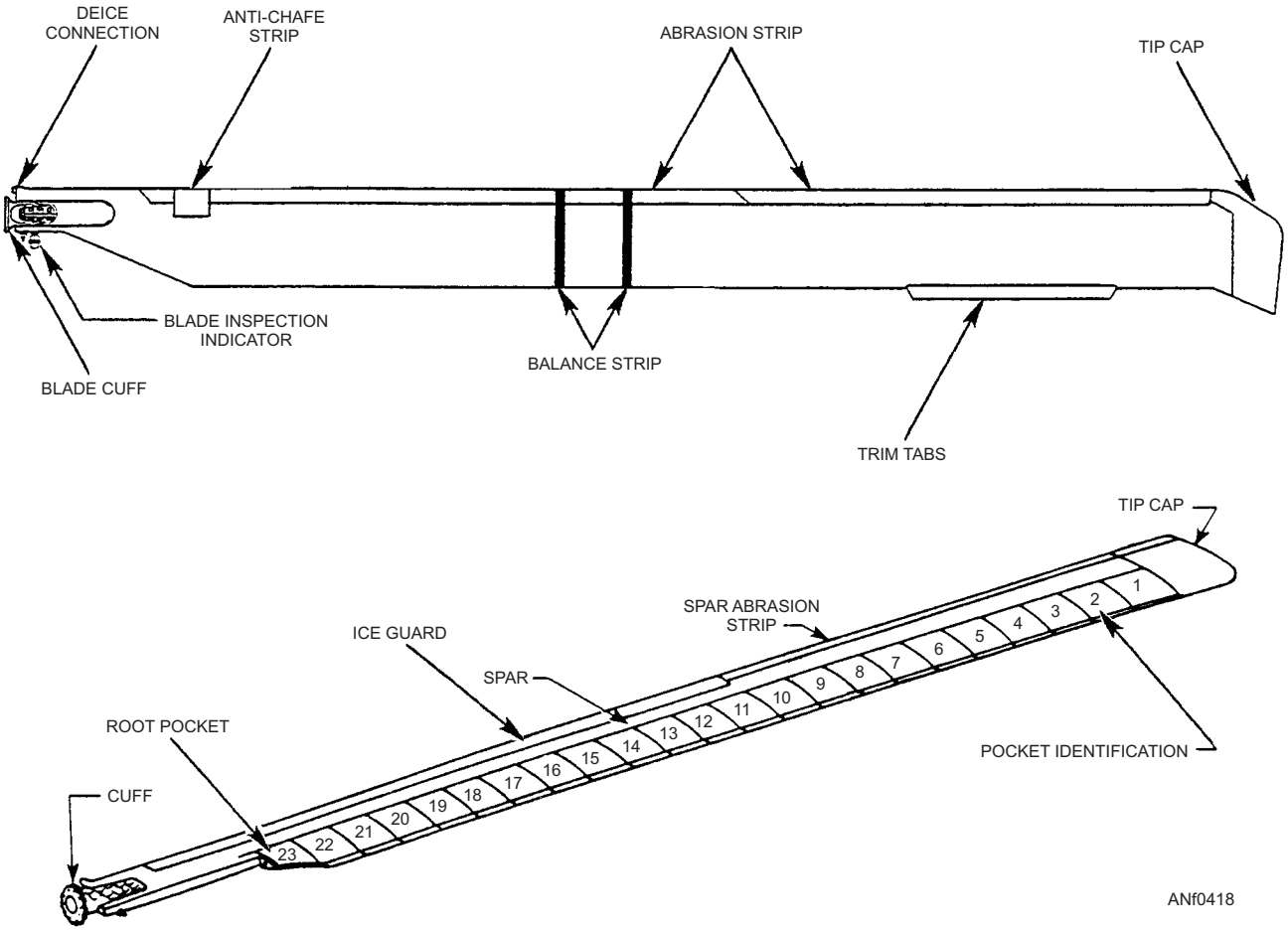

Figure 4-18.—Types of main rotor blades.

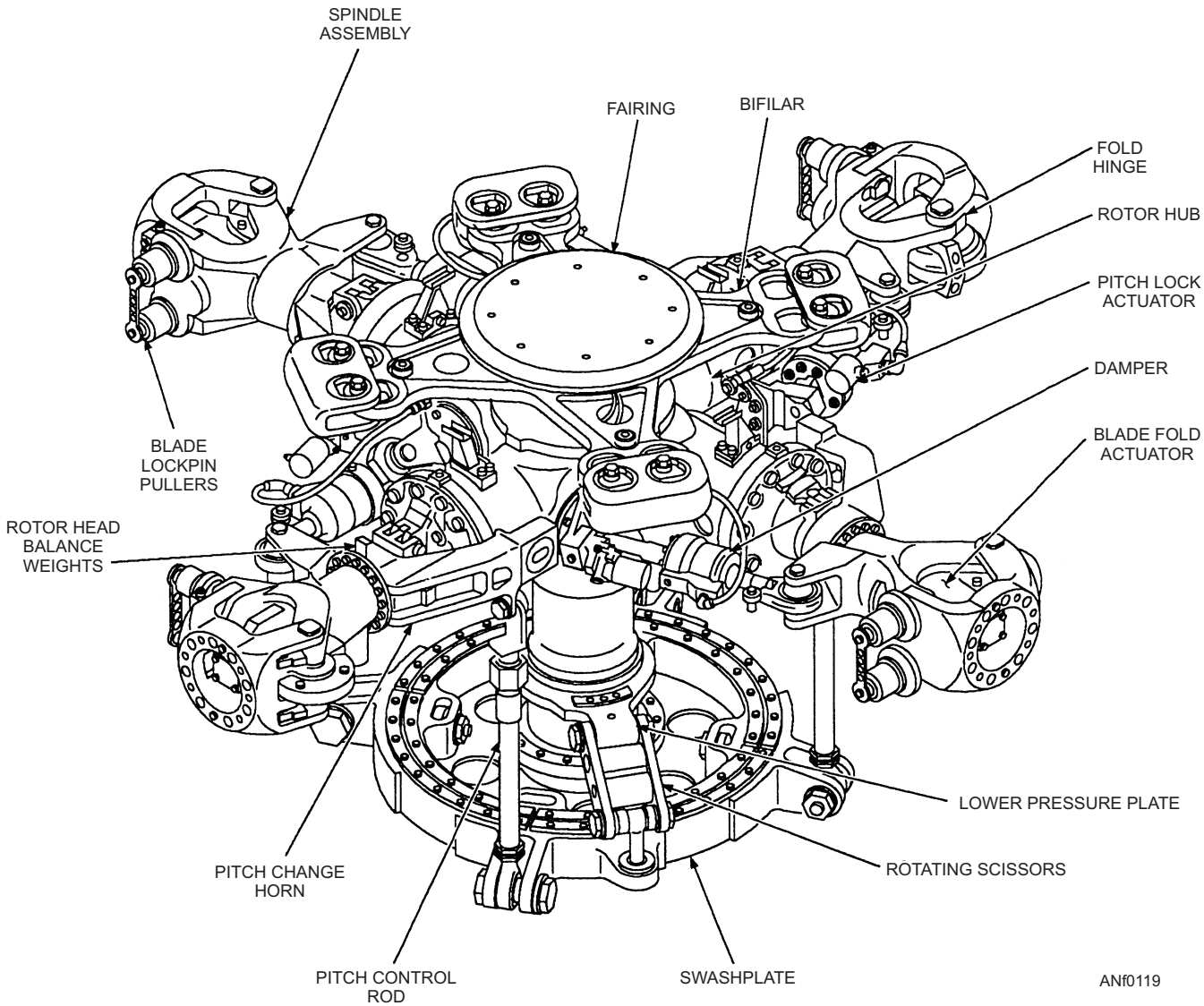

Figure 4-19.—Main rotor head/hub assembly.

flight controls to be transmitted to the rotary-wing blades. The sleeve and spindle and blade dampers allow limited movement of the blades in relation to the hub. These movements are known as *lead*, *lag*, and *flap*.

- Lead occurs during slowing of the drive mechanism when the blades have a tendency to remain in motion.
- Lag is the opposite of lead and occurs during acceleration when the blade has been at rest and tends to remain at rest.
- Flap is the tendency of the blade to rise with high-lift demands as it tries to screw itself upward into the air.

Antiflapping stops and droop stops restrict flapping and conning motion of the rotary-wing head and blades at low rotor rpm when slowing or stopping.

TAIL ROTOR GROUP

The directional control and antitorque action of the helicopter is provided by the tail rotor group. See

figure 4-20. These components are similar in function to the main rotor.

Pylon

The pylon, shown in figure 4-20, attaches on the aircraft to the main fuselage by hinge fittings. These hinge fittings serve as the pivot point for the pylon to fold along the fuselage. Folding the pylon reduces the overall length of the helicopter, which helps for confined shipboard handling.

The pylon houses the intermediate and tail rotor gearboxes, tail rotor drive shaft, cover, tail bumper, position/anticollision lights, hydraulic servos, flight control push-pull tubes/cables/bell cranks, stabilizer/elevator flight control surface, some antennas, and rotary rudder assembly.

Rotary Rudder Head

The rudder head can be located on either side of the pylon, depending on the type of aircraft, and includes such items as the hub, spindle, pitch control beam, pitch change links, bearings, and tail rotor blades.

Change in blade pitch is accomplished through the pitch change shaft that moves through the horizontal shaft of the tail gearbox, which drives the rotary rudder assembly. As the shaft moves inward toward the tail gearbox, pitch of the blade is decreased. As the shaft moves outward from the tail gearbox, pitch of the blade is increased. The pitch control beam is connected by links to the forked brackets on the blade sleeves.

Rotary Rudder Blades

Like the blades on a main rotor head, the blades found on a rotary rudder head may differ, depending on the type of aircraft. Tail rotor blades may consist of the following components:

- Aluminum alloy, graphite composite, or titanium spar
- Aluminum pocket and skin with honeycomb core or cross-ply fiber glass exterior
- Aluminum or graphite composite tip cap

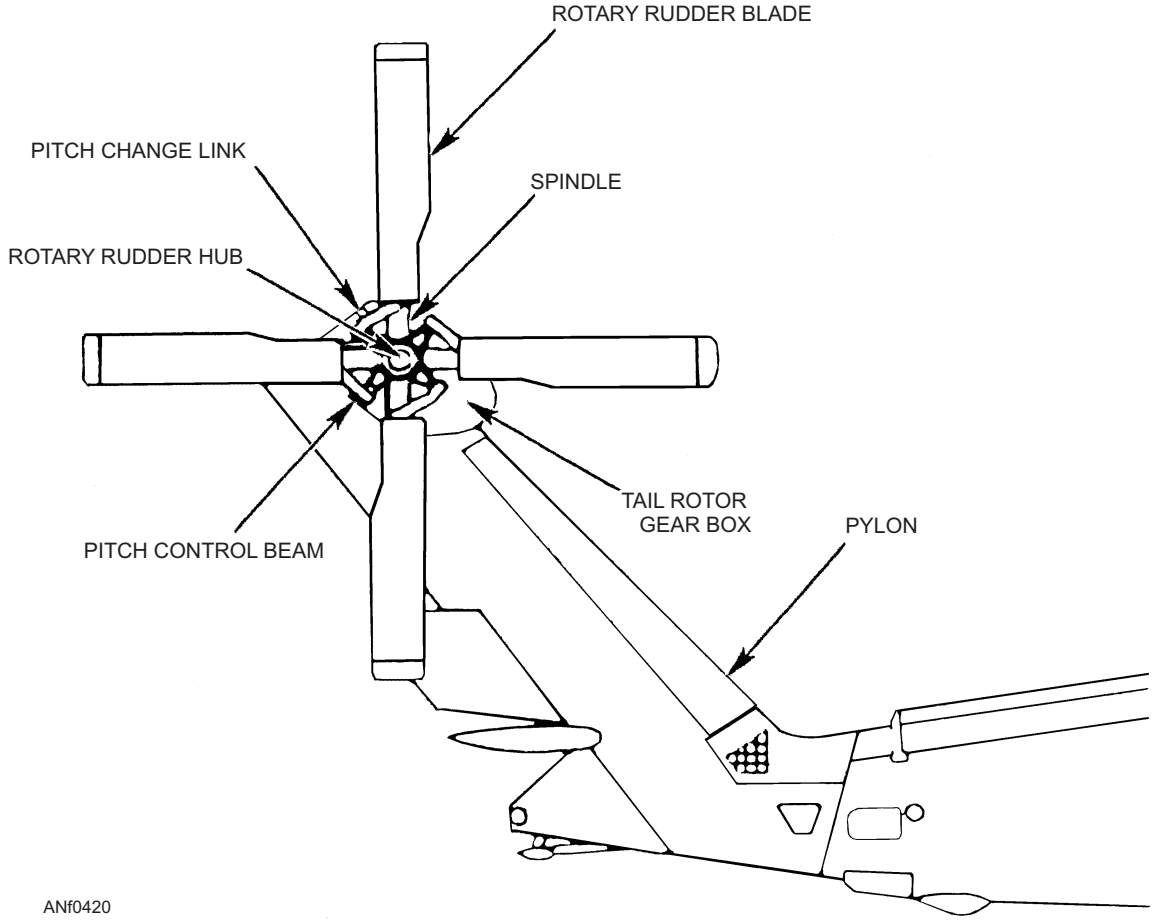

Figure 4-20.—Tail rotor group.

- Aluminum trailing edge cap
- Aluminum or polyurethane and nickel abrasion leading edge strip

Additionally, rotary rudder blades may have deicing provisions, such as electrothermal blankets that are bonded into the blade's leading edge. or a neoprene anti-icing guard embedded with electrical heating elements.

Q4-17. What is the main advantage of rotary-wing aircraft over fixed-wing aircraft?

Q4-18. What are the three types of landing gear used on helicopters?

Q4-19. The directional control and antitorque action of the helicopter is provided by what group?

AIRCRAFT HYDRAULIC SYSTEMS

LEARNING OBJECTIVE: Identify the components of aircraft hydraulic systems and recognize their functions.

The aircraft hydraulic systems found on most naval aircraft perform many functions. Some systems operated by hydraulics are flight controls, landing gear, speed brakes, fixed-wing and rotary-wing folding mechanisms, auxiliary systems, and wheel brakes.

Hydraulics has many advantages as a power source for operating these units on aircraft.

- Hydraulics combine the advantages of lightweight, ease of installation, simplification of inspection, and minimum maintenance requirements.
- Hydraulics operation is almost 100-percent efficient, with only a negligible loss due to fluid friction.

However, there are some disadvantages to using hydraulics.

- The possibility of leakage, both internal and external, may cause the complete system to become inoperative.
- Contamination by foreign matter in the system can cause malfunction of any unit. Cleanliness in hydraulics cannot be overemphasized.

COMPONENTS OF A BASIC SYSTEM

Basically, any hydraulic system contains the following units:

- A **reservoir** to hold a supply of hydraulic fluid
- A **pump** to provide a flow of fluid
- **Tubing** to transmit the fluid
- A **selector valve** to direct the flow of fluid
- An **actuating unit** to convert the fluid pressure into useful work

A simple system using these essential units is shown in figure 4-21.

You can trace the flow of fluid from the reservoir through the pump to the selector valve. In figure 4-21, the flow of fluid created by the pump flows through the valve to the right end of the actuating cylinder. Fluid pressure forces the piston to the left. At the same time, the fluid that is on the left of the piston is forced out. It goes up through the selector valve and back to the reservoir through the return line.

When the selector valve is moved to the position indicated by the dotted lines, the fluid from the pump flows to the left side of the actuating cylinder. Movement of the piston can be stopped at any time simply by moving the selector valve to neutral. When the selector valve is in this position, all four ports are closed, and pressure is trapped in both working lines.

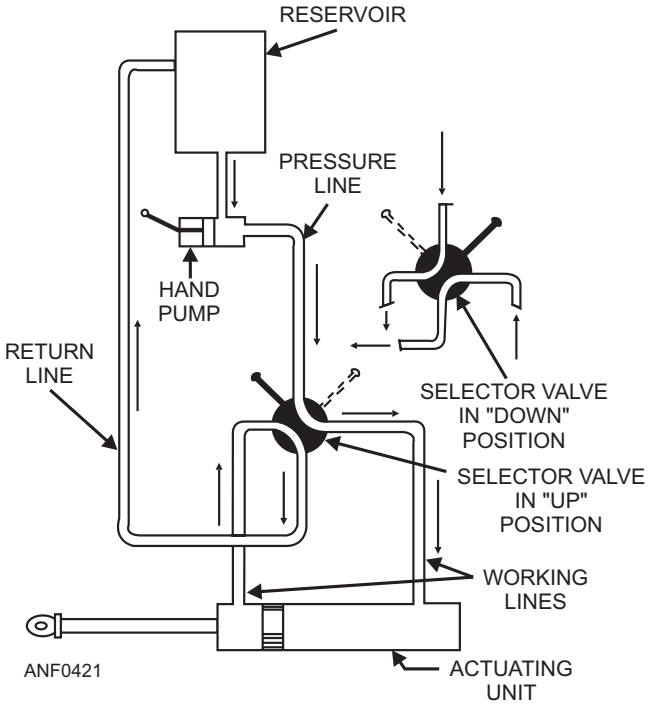

Figure 4-21.—Basic hydraulic system, hand pump operated.

Figure 4-22 shows a basic system with the addition of a power-driven pump and other essential components. These components are the filter, pressure regulator, accumulator, pressure gauge, relief valve, and two check valves. The function of these components is described below.

The **filter** (fig. 4-22) removes foreign particles from the fluid, preventing moisture, dust, grit, and other undesirable matter from entering the system.

The **pressure regulator** (fig. 4-22) unloads or relieves the power-driven pump when the desired pressure in the system is reached. Therefore, it is often referred to as an *unloading valve*. With none of the actuating units operating, the pressure in the line between the pump and selector valve builds up to the desired point. A valve in the pressure regulator automatically opens and fluid is bypassed back to the reservoir. (The bypass line is shown in figure 4-22, leading from the pressure regulator to the return line.)

NOTE: Many aircraft hydraulic systems do not use a pressure regulator. These systems use a pump that automatically adjusts to supply the proper volume of fluid as needed.

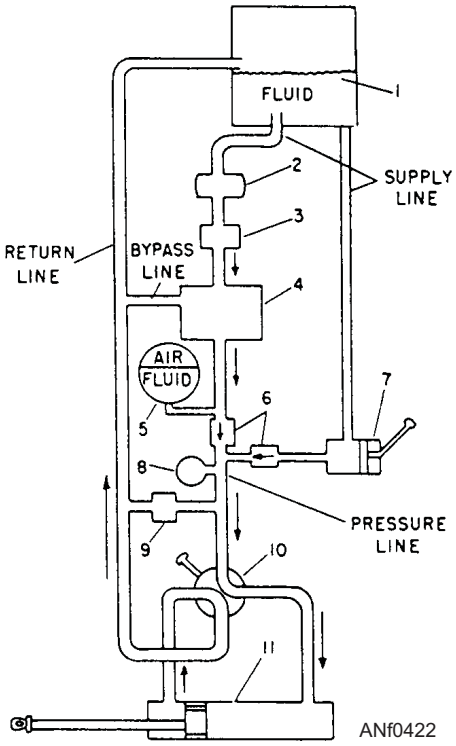

1. **Reservoir**
2. **Power pump**
3. **Filter**
4. **Pressure regulator**
5. **Accumulator**
6. **Check valves**
7. **Hand pump**
8. **Pressure gauge**
9. **Relief valve**
10. **Selector valve**
11. **Actuating unit**

Figure 4-22.—Basic hydraulic system with addition of power pump.

The **accumulator** serves a twofold purpose.

1. It serves as a cushion or shock absorber by maintaining an even pressure in the system.
2. It stores enough fluid under pressure to provide for emergency operation of certain actuating units.

The accumulator is designed with a compressed-air chamber separated from the fluid by a flexible diaphragm, or a removable piston.

The **pressure gauge** indicates the amount of pressure in the system.

The **relief valve** is a safety valve installed in the system. When fluid is bypassed through the valve to the return line, it returns to the reservoir. This action prevents excessive pressure in the system.

Check valves allow the flow of fluid in one direction only. There are numerous check valves installed at various points in the lines of all aircraft hydraulic systems. A careful study of figure 4-22 shows why the two check valves are necessary in this system. One check valve prevents power pump pressure from entering the hand-pump line. The other valve prevents hand-pump pressure from being directed to the accumulator.

HYDRAULIC CONTAMINATION

Hydraulic contamination is defined as *foreign material in the hydraulic system of an aircraft*. Foreign material might be grit, sand, dirt, dust, rust, water, or any other substance that is not soluble in the hydraulic fluid.

There are two basic ways to contaminate a hydraulic system. One is to inject particles, and the other is to intermix fluids, including water.

Particle contamination in a system may be self-generated through normal wear of system components. It is the injection of contaminants from outside that usually causes the most trouble. Regardless of its origin, any form of contamination in the hydraulic system will slow performance. In extreme cases, it seriously affects safety.

A single grain of sand or grit can cause internal failure of a hydraulic component. Usually, this type of contamination comes from poor servicing and fluid-handling procedures. For this reason, the highest

level of cleanliness must be maintained when working on hydraulic components.

Only approved fill stand units are used to service naval aircraft hydraulic systems. By following a few basic rules, you can service hydraulic systems safely and keep contamination to a minimum.

- Never use fluid that has been left open for an undetermined period of time. Hydraulic fluid that is exposed to air will absorb dust and dirt.
- Never pour fluid from one container into another.
- Use only approved servicing units for the specific aircraft.
- Maintain hydraulic fluid-handling equipment in a high state of cleanliness.
- Always make sure you use the correct hydraulic fluid.

Contamination of the hydraulic system may be caused by wear or failure of hydraulic components and seals. This type of contamination is usually found through filter inspection and fluid analysis. Continued operation of a contaminated system may cause malfunctioning or early failure of hydraulic components.

Q4-20. What are two disadvantages of a hydraulic system?

Q4-21. On a basic hydraulic system, what is the purpose of the selector valve?

Q4-22. On a basic hydraulic system, what is the purpose of the actuating unit?

Q4-23. Define hydraulic contamination.

PNEUMATIC SYSTEMS

LEARNING OBJECTIVE: Identify the components of aircraft pneumatic systems and recognize their functions.

There are two types of pneumatic systems currently used in naval aircraft. One type uses storage bottles for an air source, and the other has its own air compressor.

Generally, the storage bottle system is used only for emergency operation. See figure 4-23. This system has an air bottle, a control valve in the cockpit for releasing the contents of the cylinders, and a ground charge (filler) valve. The storage bottle must be filled with compressed air or nitrogen prior to flight. Air storage cylinder pneumatic systems are in use for emergency brakes, emergency landing gear extension, emergency flap extension, and for canopy release mechanisms.

When the control valve is properly positioned, the compressed air in the storage bottle is routed through the shuttle valve to the actuating cylinder.

NOTE: The shuttle valve is a pressure-operated valve that separates the normal hydraulic system from the emergency pneumatic system. When the control handle is returned to the normal position, the air pressure in the lines is vented overboard through the vent port of the control valve.

The other type of pneumatic system in use has its own air compressor. It also has other equipment necessary to maintain an adequate supply of compressed air during flight. Most systems of this type must be serviced on the ground prior to flight. The air

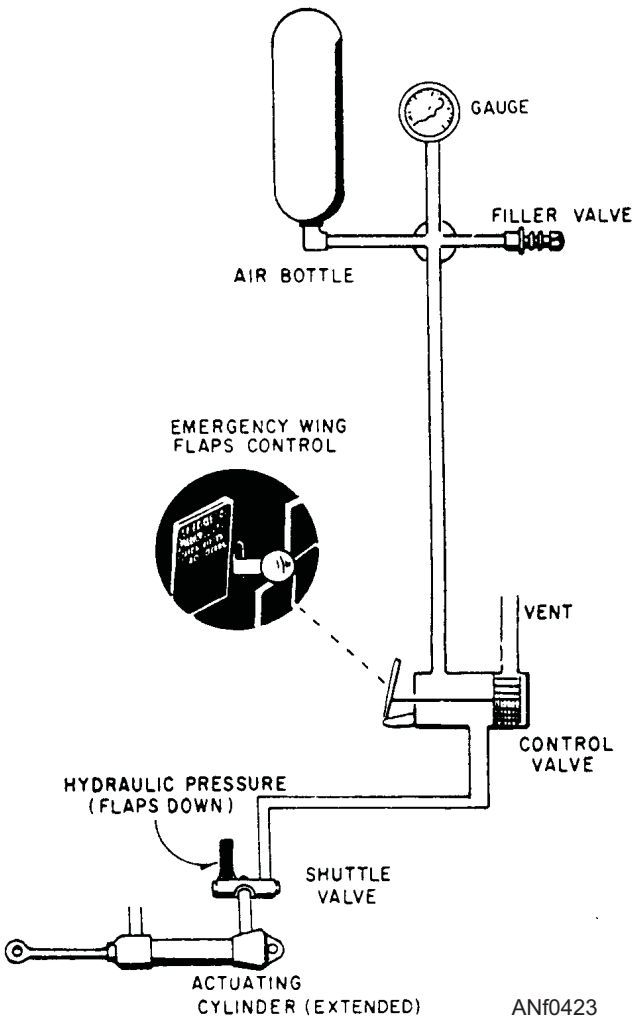

Figure 4-23.—Emergency pneumatic system.

compressor used in most aircraft is driven by a hydraulic motor. Aircraft that have an air compressor use the compressed air for normal and emergency system operation.

Q4-24. What are the two types of pneumatic systems currently used in naval aircraft?

SUMMARY

In this chapter, you have learned about aircraft construction and the materials used in construction. You have also learned about the features and materials used to absorb stress on both fixed-wing and rotary-wing aircraft.

ASSIGNMENT 4

Textbook Assignment: "Aircraft Basic Construction," chapter 4, pages 4-1 through 4-22.

4-1. What are the most important factors in aircraft construction?

1. Lightness and strength
2. Strength, weight, and reliability
3. Maneuverability and speed
4. Speed, strength, and weight

4-2. The weight of the aircraft is primarily a product of what force?

1. Lift
2. Thrust
3. Gravity
4. Drag

4-3. All stresses imposed on the aircraft wings are transmitted to what area?

1. The fuselage structure
2. The outer layer or shield of the wings
3. The surrounding atmosphere
4. The stress releaser plugs

4-4. A study of each load or stress that is imposed on an aircraft is known by what term?

1. Load and stress configuration
2. Load and stress reaction
3. Dynamic analysis
4. Stress analysis

4-5. Load and stress imposed upon an aircraft must first be analyzed when the aircraft is in what stage of the manufacturing cycle?

1. Final assembly
2. Design
3. Initial flight test
4. Acceptance by Navy

4-6. What aircraft stress results from squeezing of a material?

1. Compression
2. Tension
3. Torsion
4. Bending

4-7. What aircraft stress results from two fastened materials that tend to separate?

1. Tension
2. Bending
3. Torsional
4. Shear

4-8. What aircraft stress results from a twisting force?

1. Compression
2. Bending
3. Torsional
4. Shear

4-9. A reaction to engine torque creates what type of stress in an aircraft fuselage?

1. Bending
2. Tension
3. Compression
4. Torsional

4-10. What primary force is at work on the fuselage when an aircraft is at rest?

1. Torsion
2. Tension
3. Bending
4. Compression

4-11. What is the result of the action of lift forces against the wings of an aircraft in flight?

1. Tension on the bottom and compression on the top
2. Compression on both the bottom and top
3. Tension on both the bottom and top
4. Compression on the bottom and tension on the top

4-12. Wings of an aircraft in flight are under what primary force?

1. Torsional
2. Compression
3. Bending
4. Tension

4-13. Which of the following metals are used in modern aircraft construction?

1. Aluminum and magnesium
2. Titanium and steel
3. Alloys
4. All of the above

4-14. Instead of pure aluminum, an aircraft builder uses aluminum alloys to get what desired result?

1. Stronger end product
2. More conductive metal
3. Less conductive metal
4. Softer end product

4-15. What is the main disadvantage of the use of magnesium in aircraft construction?

1. Weight
2. Strength
3. Hardness
4. Low resistance to corrosion

4-16. Which of the following alloys or metals is particularly valuable for use in or near salt water?

1. Magnesium
2. Titanium
3. Carbon steel
4. Pure aluminum

4-17. Transparent plastic becomes soft and pliable at approximately what minimum temperature?

1. 200°F
2. 225°F
3. 250°F
4. 275°F

4-18. What is the main advantage of reinforced plastic?

1. It has high strength-to-weight ratio
2. Its resistance to mildew and rot
3. Its ease of fabrication
4. All of the above

4-19. When several layers of bonding materials are used together and then mechanically fastened to conventional substructures, it is known as what type of construction?

1. Fiber glass
2. Composite
3. Metallic
4. Honeycomb core

4-20. The terms *right* or *left* used in relation to any of the structural units refer to the right or left hand of the pilot seated in the cockpit.

1. True
2. False

4-21. What is the main structure of an aircraft?

1. Engine
2. Wings
3. Fuselage
4. Tail

4-22. In the monocoque design, the main stress on an airplane is carried by what structural unit(s)?

1. Skin
2. Formers
3. Frame assemblies
4. Bulkheads

4-23. What is the main purpose of stringers in the semimonocoque design?

1. To add length to the frame
2. To carry concentrated loads
3. For attachment of the wings
4. For shape and attachment of the skin

4-24. What type of skin construction can withstand considerable damage and still hold together?

1. Semimonocoque
2. Monocoque
3. Plastic-impregnated
4. Wood-impregnated

4-25. Where is fuselage station 0 (zero) of an aircraft usually located?

1. Center of fuselage
2. Tail of aircraft
3. Nose of aircraft
4. Pilot's location

4-26. What is the unit of measurement in the station's numbering system?

1. Centimeters
2. Feet
3. Meters
4. Inches

4-27. Wings on an aircraft are designed for which of the following purposes?

1. Lift
2. Steering
3. Cutting through the air
4. Balancing the aircraft

4-28. What are the main structural members of the wing?

1. Beams
2. Ribs
3. Spars
4. Wires

4-29. The spars are designed with extra strength to combat which of the following forces?

1. Torsion
2. Bending
3. Tension
4. Compression

4-30. What parts of an aircraft wing transmit the load from the skin covering to the spars?

1. Formers
2. Stringers
3. False spars
4. Ribs

4-31. What is the purpose of the false spar in some aircraft wings?

1. To support the ailerons and flaps
2. To give the wings bending strength
3. To help transmit the air load from the wing
4. To help carry the load

4-32. The term *wet wing* is used to describe what construction feature?

1. How water drains from the surface
2. Fuel cells installed in the wing
3. How water is used to balance the wing
4. Oil tanks installed in the wing

4-33. The flight control surfaces on a simple wing include what controls?

1. Edge flaps and ailerons
2. Trailing and leading edge flaps
3. Ailerons and leading edge flaps
4. Ailerons and trailing edge flaps

4-34. The empennage of the aircraft consists of which of the following sections?

1. Wings and tail
2. Speed brakes, spoilers, and flaps
3. Vertical and horizontal stabilizers, rudder, and elevators
4. Ribs, spars, and skin

4-35. What is the primary function of the stabilizers?

1. To provide drag for the aircraft
2. To control the direction of flight
3. To balance the weight of the wings
4. To keep the aircraft flying straight and level

4-36. What surfaces maintain directional stability in an aircraft?

1. The rudder
2. The elevators
3. The vertical stabilizer
4. The horizontal stabilizer

4-37. What are the three groups of flight control surfaces?

1. Main, ancillary, and optional
2. Primary, secondary, and optional
3. Primary, secondary, and auxiliary
4. Primary, secondary, and tertiary

4-38. Ailerons, elevators, and rudders make up what group of aircraft control surfaces?

1. Primary
2. Auxiliary
3. Optional
4. Secondary

4-39. The ailerons control what motion of the aircraft?

1. Pitch
2. Roll
3. Yaw
4. Skid

4-40. Elevators are used to control what aspects of flight?

1. Motion about the vertical axis
2. Motion about the lateral axis
3. Forward flight
4. Landing or takeoff

4-41. Where are the elevator control surfaces located?

1. Trailing edge of the wings
2. Horizontal stabilizer
3. Lower surface of the fuselage
4. Vertical stabilizer

4-42. Where are the rudder control surfaces located?

1. Trailing edge of the wings
2. Horizontal stabilizer
3. Lower surfaces of the fuselage
4. Vertical stabilizer

4-43. What assembly operates the ailerons and elevators on a multiengine fixed–wing aircraft?

1. Yoke and wheel assembly
2. Control stick assembly
3. Stock and shaft assembly
4. Steering and shaft assembly

4-44. What is the purpose of trim tabs?

1. To maneuver the aircraft
2. To reduce landing speed
3. To maintain aircraft balance
4. To move the primary control surfaces

4-45. What is the purpose of the spring tabs?

1. To steer the aircraft
2. To aid in moving larger surfaces
3. To trim out unbalanced conditions
4. To secure removable panels

4-46. Which of the following auxiliary flight control surfaces are used for the purpose of shortening the landing and takeoff runs?

1. Slats
2. Spoilers
3. Wing flaps
4. Speed brakes

4-47. What is the purpose of spoilers?

1. To increase wing lift
2. To decrease wing lift
3. To increase aircraft speed
4. To decrease aircraft speed

4-48. Speed brakes are designed to slow down the aircraft during which of the following operations?

1. Takeoffs and landings
2. Skids and ascents
3. Dives and preparations for landing
4. Turn and banks

4-49. What auxiliary control surfaces affect the boundary layer over the top of the wing?

1. Flaps
2. Spoilers
3. Speed brakes
4. Slats

4-50. The three general types of manually operated flight control mechanisms does NOT include which of the following types?

1. Cable operated
2. Torque tube operated
3. Bell crank operated
4. Push-pull tube operated

4-51. What power-oriented device moves the control surface in high-performance aircraft?

1. Pneumatic actuator
2. Hydraulic cylinder
3. Hydraulic booster
4. Pneumatic booster

4-52. What type of landing gear is designed with the main landing gear located behind the center of gravity and the auxiliary landing gear under the nose of the aircraft?

1. Bicycle gear
2. Tricycle gear
3. Conventional gear
4. Protective skid

4-53. Shock encountered in landing, taxiing, and takeoff of all naval aircraft is absorbed by what agent(s) or component in shock struts?

1. Nitrogen only
2. Hydraulic fluid only
3. Nitrogen and hydraulic fluid
4. Springs

4-54. By what means is the arresting hook of an aircraft released, lowered, and raised?

1. It is released mechanically, lowered hydraulically, and raised pneumatically
2. It is released mechanically, lowered pneumatically, and raised hydraulically
3. It is released hydraulically, lowered mechanically, and raised pneumatically
4. It is released pneumatically, lowered hydraulically, and raised mechanically

4-55. What mechanism is used to hold the arresting hook in the down position?

1. Springs only
2. Snubber only
3. Springs and snubber
4. Mechanical fingers

4-56. When an aircraft is catapulted from an aircraft carrier, the holdback assembly is used for what purpose?

1. To connect the bridle to the aircraft
2. To direct the exhaust upward
3. To secure the aircraft to the deck
4. To keep the nosewheel straight

4-57. When an aircraft is catapulted from an aircraft carrier, the holdback tension bar separates when what other action occurs?

1. The catapult fires
2. The maintenance person releases a handle
3. The tail hook is lowered
4. The pilot releases a handle

4-58. The fuselage of the H-60 helicopter is of what type of construction?

1. Graphite monocoque
2. All–metal semimonocoque
3. Reinforced carbon shell
4. Welded steel truss

4-59. What type of main landing gear is mounted on the H–60 helicopter?

1. Retractable
2. Fixed–skid type
3. Nonretractable
4. Conventional fixed

4-60. What assembly provides attachment of the main rotor blade to the rotor hub?

1. Cuff
2. Spar
3. Root end
4. Tip cap

4-61. The hub and swashplate of a helicopter are the principal components of what unit(s)?

1. Tail rotor
2. Droop restrainers
3. Rotary head
4. Antiflapping restrainers

4-62. The movements of the flight controls are transmitted to the rotary wing by the action of what components?

1. Hinges and rotating scissors
2. Sleeve spindles and antiflapping restrainers
3. Damper positioners and stationary scissors
4. Hydraulic servo cylinders, swashplate, and pitch control rods

4-63. Change in rotary rudder head pitch is increased as the pitch change shaft is moved in what direction?

1. Up
2. Down
3. Inward
4. Outward

4-64. The efficiency of hydraulic operation is approximately what percent?

1. 100%
2. 95%
3. 85%
4. 75%

4-65. Which of the following is a disadvantage of the hydraulic system as a power source for aircraft control units?

1. Extensive maintenance requirements
2. Possibility of internal and external leakage
3. Loss of efficiency due to friction
4. Heavy weight

IN ANSWERING QUESTIONS 4-66 THROUGH 4-68, REFER TO FIGURE 4-22 IN THE TEXT.

4-66. What component is often referred to as an unloading valve?

1. Pressure regulator
2. Check valve
3. Selector valve
4. Actuating unit

4-67. What component maintains an even pressure in the hydraulic system and acts as an emergency source for operating certain actuating units?

1. Power pump
2. Accumulator
3. Pressure gauge
4. Selector valve

4-68. Check valves are used in a hydraulic system for what purpose?

1. To bleed off pressure
2. To stop the flow of fluid
3. To allow one direction of flow only
4. To bypass filter element

4-69. Foreign material in the hydraulic system of an aircraft is defined as hydraulic contamination.

1. True
2. False

4-70. What source of hydraulic contamination usually causes the most trouble?

1. Poor servicing
2. Self-generated
3. Normal wear
4. Manufactured

4-71. Which of the following rules is/are basic to aircraft hydraulic servicing?

1. Never use fluid from a container that has been left open
2. Use only approved servicing units
3. Always maintain a high state of cleanliness
4. All of the above

4-72. What, if anything, would the continued operation of a contaminated hydraulic system cause?

1. Normal wear
2. Early failure
3. Late failure
4. Nothing, if only used for a short time

4-73. Prior to flight, the air storage bottles for the emergency pneumatic system are filled with what gas?

1. Carbon dioxide
2. Oxygen
3. Hydrogen
4. Nitrogen

4-74. The shuttle valve is used for what purpose?

1. To transfer pneumatic pressure
2. To transfer hydraulic pressure
3. To direct fluid back to accumulator
4. To separate normal systems from emergency pneumatic systems

4-75. By what means are the air compressors in most aircraft driven?

1. Electric motor
2. Hydraulic motor
3. Electrohydraulic motor
4. Electropneumatic motor

CHAPTER 5

AIRCRAFT HARDWARE

INTRODUCTION

The importance of aircraft hardware is often overlooked because of the small size of most items. However, the safe and efficient operation of any aircraft depends upon the correct selection and use of aircraft hardware. This chapter discusses the various types of threaded fasteners, quick-release fasteners, rivets, electrical hardware, and other miscellaneous hardware. You must make sure that items of aircraft hardware remain tightly secured in the aircraft. Therefore, we will discuss proper safetying methods in this chapter.

Aircraft hardware is identified for use by its specification number or trade name. Threaded fasteners and rivets are identified by Air Force-Navy (AN), National Aircraft Standard (NAS), and Military Standard (MS) numbers. Quick-release fasteners are identified by factory trade names and size designations.

When aircraft hardware is ordered from supply, the specification numbers and the factory part numbers are changed into stock numbers (SN). This change is identified by using a part-number cross-reference index.

Q5-1. How is aircraft hardware identified for use?

THREADED FASTENERS

LEARNING OBJECTIVE: Identify common types of threaded fasteners and the methods used to properly install and safety them.

In modern aircraft construction, thousands of rivets are used, but many parts require frequent dismantling or replacement. It is more practical for you to use some form of threaded fastener. Some joints require greater strength and rigidity than can be provided by riveting. We use various types of bolts, screws, and nuts to solve this problem.

Bolts and screws are similar in that both have a head at one end and a screw thread at the other. However, there are several differences between them. The threaded end of a bolt is always relatively blunt. A screw may be either blunt or pointed. The threaded end of a bolt must be screwed into a nut. The threaded end of the screw may fit into a nut or directly into the material being secured. A bolt has a fairly short threaded section and a comparatively long grip length (the unthreaded part). A screw may have a longer threaded section and no clearly defined grip length. A bolt assembly is generally tightened by turning a nut. The bolt head may or may not be designed to be turned. A screw is always designed to be turned by its head. Another minor difference between a screw and a bolt is that a screw is usually made of lower strength materials.

Threads on aircraft bolts and screws are of the American National Aircraft Standard type. This standard contains two series of threads—national coarse (NC) and national fine (NF). Most aircraft threads are of the NF series.

Bolts and screws may have right- or left-hand threads. A right-hand thread advances into engagement when turned clockwise. A left-hand thread advances into engagement when turned counterclockwise.

AIRCRAFT BOLTS

Many types of bolts are used in modern aircraft, and each type is used to fasten something in place. Before discussing some of these types, it might be helpful if we list and explain some commonly used bolt terms. You should know the names of bolt parts and be aware of the bolt dimensions that must be considered in selecting a bolt.

The three principal parts of a bolt are the *head*, *grip*, and *threads*, as shown in figure 5-1. Two of these parts might be well known to you, but perhaps grip is an unfamiliar term. The grip is the unthreaded part of the bolt shaft. It extends from the threads to the bottom of the bolt head. The head is the larger diameter of the bolt and may be one of many shapes or designs.

To choose the correct replacement for an unserviceable bolt, you must consider the length of the bolt. As shown in figure 5-1, the bolt length is the distance from the tip of the threaded end to the head of the bolt. Correct length selection is indicated when the bolt extends through the nut at least two full threads. See figure 5-2. If the bolt is too short, it will not extend out of the bolt hole far enough for the nut to be securely fastened. If it is too long, it may extend so far that it interferes with the movement of nearby parts.

In addition, if a bolt is too long or too short, its grip will usually be the wrong length. As shown in figure 5-2, the grip length should be approximately the same as the thickness of the material to be fastened. If the grip is too short, the threads of the bolt will extend into the bolt hole. The bolt may act like a reamer when the material is vibrating. To prevent this, make certain that no more than two threads extend into the bolt hole. Also, make certain that any threads that enter the bolt hole extend only into the thicker member that is being fastened. If the grip is too long, the nut will run out of threads before it can be tightened. In this event, a bolt with a shorter grip should be used. If the bolt grip extends only a short distance through the hole, a washer may be used.

A second bolt dimension that must be considered is diameter. As shown in figure 5-1, the diameter of the bolt is the thickness of its shaft.

The results of using a wrong diameter bolt should be obvious. If the bolt is too big, it cannot enter the bolt hole. If the diameter is too small, the bolt has too much play in the bolt hole.

The third and fourth bolt dimensions that should be considered when you choose a bolt replacement are head thickness and width. If the head is too thin or too narrow, it might not be strong enough to bear the load imposed on it. If the head is too thick or too wide, it might extend so far that it interferes with the movement of adjacent parts.

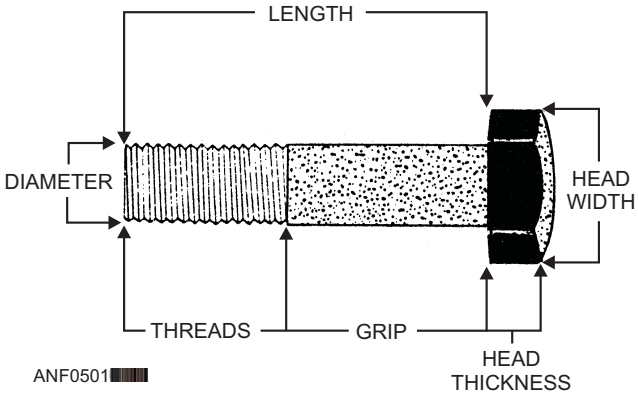

Figure 5-1.—Bolt terms and dimensions.

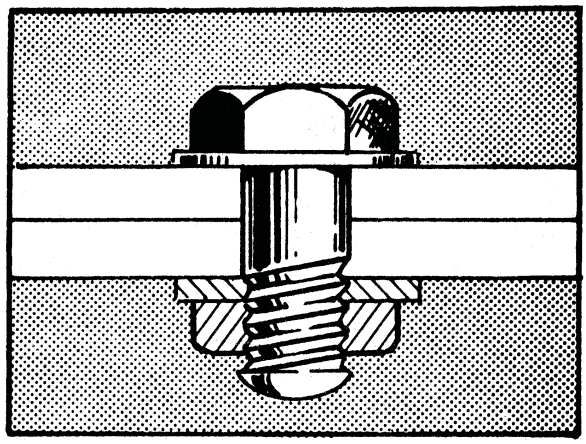
BOLT GRIP LENGTH CORRECT

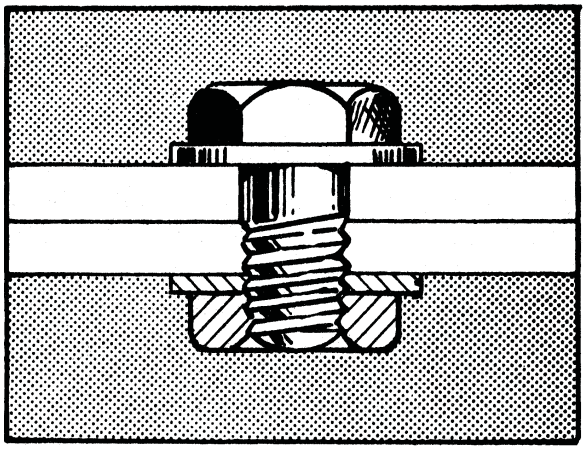
BOLT GRIP LENGTH TOO SHORT

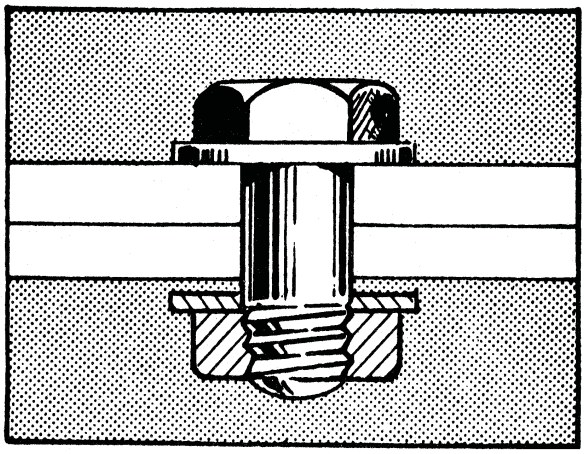
BOLT GRIP LENGTH TOO LONG ANF0502

Figure 5-2.—Correct and incorrect grip lengths.

AN bolts come in three head styles—hex head, clevis, and eyebolt. NAS bolts are available in

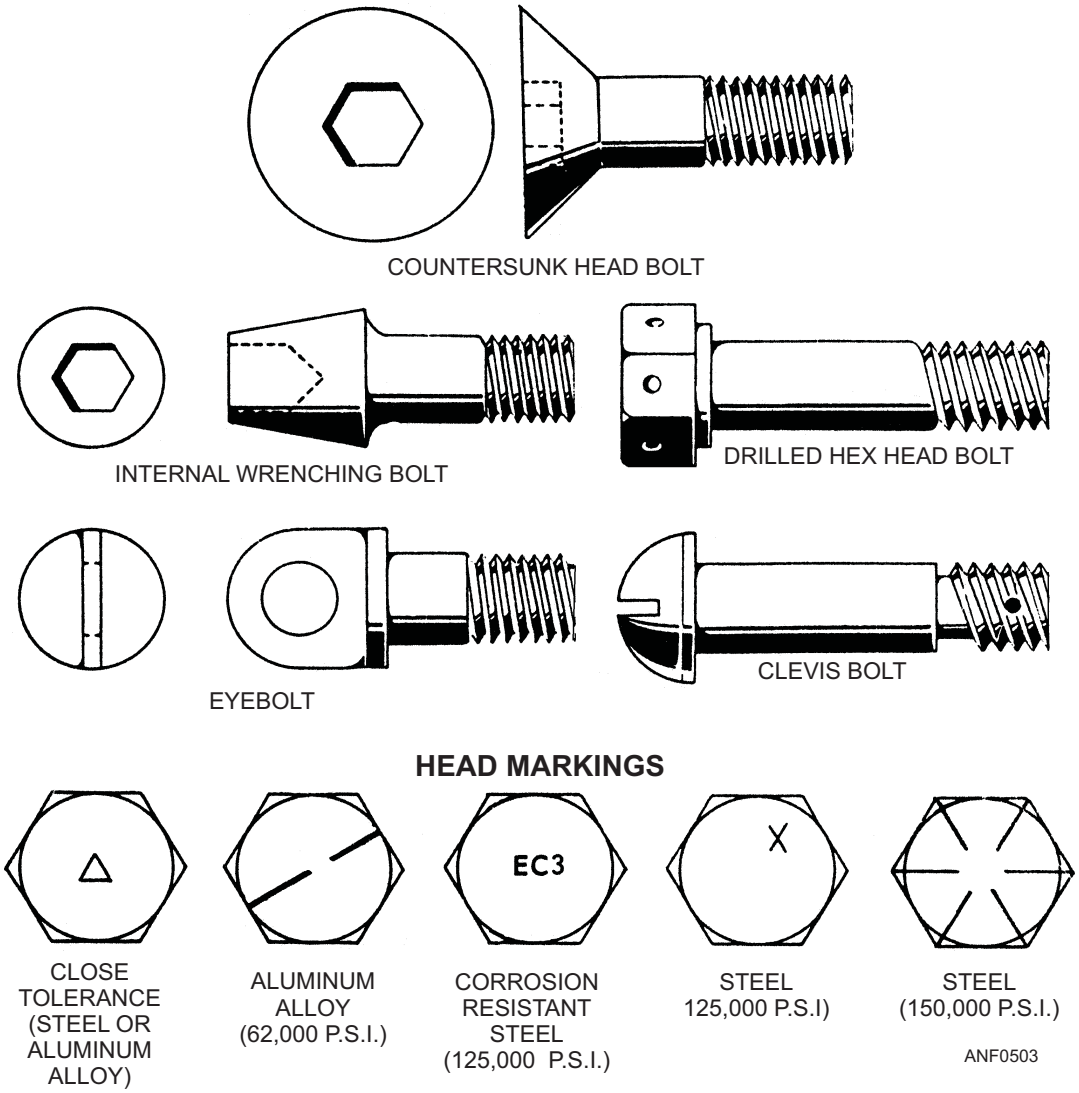

Figure 5-3.—Types of bolts and bolt head markings.

countersunk, internal wrenching, and hex head styles. MS bolts come in internal wrenching and hex head styles. Head markings indicate the material of which standard bolts are made. Head markings may indicate if the bolt is classified as a close-tolerance bolt. See figure 5-3. Additional information, such as bolt diameter, bolt length, and grip length, may be obtained from the bolt part number.

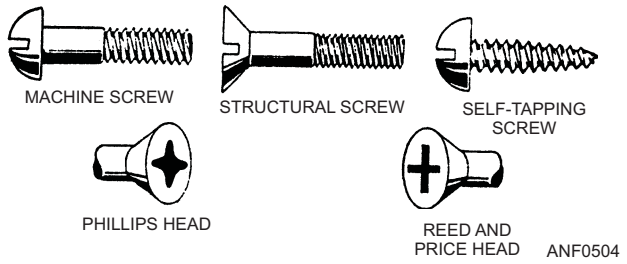

Figure 5-4.—Screws.

SCREWS

The most common threaded fastener used in aircraft construction is the screw. The three most used types are the machine screw, structural screw, and the self-tapping screw, as shown in figure 5-4. Figure 5-4 also shows the three head slots—straight, Phillips, and Reed and Prince.

Structural Screws

Structural screws are used for assembly of structural parts, as are structural bolts. They are made of alloy steel and are properly heat-treated. Structural screws have a definite grip length and the same shear and tensile strengths as the equivalent size bolt. They differ from structural bolts only in the type of head.

These screws are available in countersunk head, round head, and brazier head types. See figure 5-5.

Machine Screws

The commonly used machine screws are the round head, flat head, fillister head, pan head, truss head, and socket head types.

Self-Tapping Screws

A self-tapping screw is one that cuts its own internal threads as it is turned into the hole. Self-tapping screws may be used only in comparatively soft metals and materials. Self-tapping screws may be further divided into two classes or groups—machine self-tapping screws and sheet metal self-tapping screws.

Machine self-tapping screws are usually used for attaching removable parts, such as nameplates, to castings. The threads of the screw cut mating threads in the casting after a hole has been predrilled undersize. Sheet metal self-tapping screws are used for such purposes as temporarily attaching sheet metal in place for riveting. Sheet metal self-tapping screws may be used to permanently assemble nonstructural units where it is necessary to insert screws in difficult to get to areas.

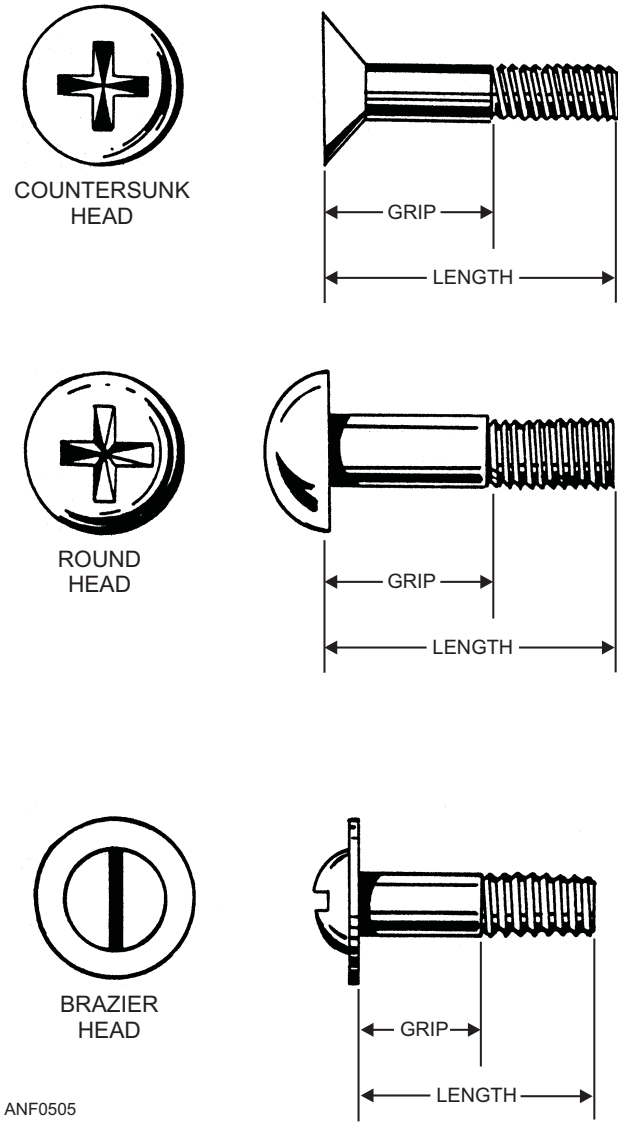

Figure 5-5.—Structural screws.

> **CAUTION**
>
> Self-tapping screws should never be used to replace standard screws, nuts, or rivets originally used in the structure.

Setscrews

Setscrews are used to position and hold components in place, such as gears on a shaft. Setscrews are available with many different point styles. They are classified as hexagon-socket and fluted-socket headless setscrews.

NUTS

Aircraft nuts may be divided into two general groups—nonself-locking and self-locking nuts. Nonself-locking nuts are those that must be safetied by external locking devices, such as cotter pins, safety wire, or locknuts. The locking feature is an integral part of self-locking nuts.

Nonself-locking Nuts

The most common of the nonself-locking nuts are the castle nut, the plain hex nut, the castellated shear nut, and the wing nut. Figure 5-6 shows these nonself-locking nuts.

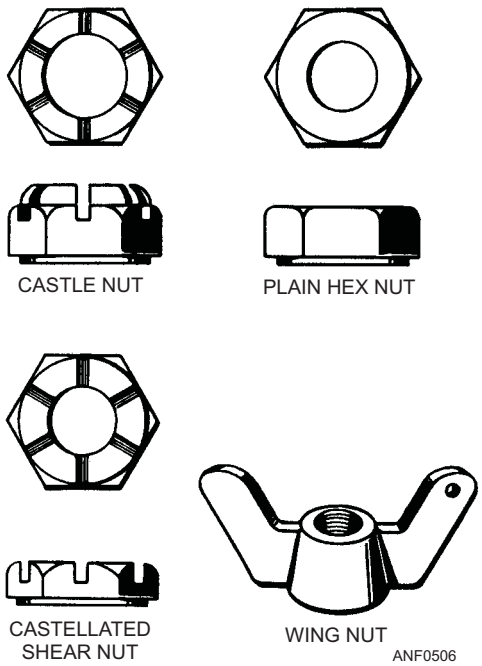

Figure 5-6.—Nonself-locking nuts.

Castle nuts are used with drilled-shank AN hex-head bolts, clevis bolts, or studs. They are designed to accept a cotter pin or lockwire for safetying.

Castellated shear nuts are used on such parts as drilled clevis bolts and threaded taper pins. They are normally subjected to shearing stress only. They must not be used in installations where tension stresses are encountered.

Plain hex nuts have limited use on aircraft structures. They require an auxiliary locking device such as a check nut or a lock washer.

Wing nuts are used where the desired tightness can be obtained by the fingers and where the assembly is frequently removed. Wing nuts are commonly used on battery connections.

Self-Locking Nuts

Self-locking nuts provide tight connections that will not loosen under vibrations. Self-locking nuts approved for use on aircraft meet critical specifications as to strength, corrosion resistance, and heat-resistant temperatures. New self-locking nuts must be used each time components are installed in critical areas throughout the entire aircraft. Self-locking nuts are found on all flight, engine, and fuel control linkage and attachments. There are two general types of self-locking nuts. They are the all-metal nuts and the metal nuts with a nonmetallic insert to provide the locking action. The Boots aircraft nut and the Flexloc nut are examples of the all-metal type. See figure 5-7. The elastic stop and the nonmetallic insert lock nut are examples of the nonmetallic insert type. All-metal self-locking nuts are constructed either of two ways. The threads in the load-carrying portion of the nut that is out of phase with the threads in the locking portion is one way. The second way is with a saw-cut top portion with a pinched-in thread. The locking action of these types depends upon the resiliency of the metal.

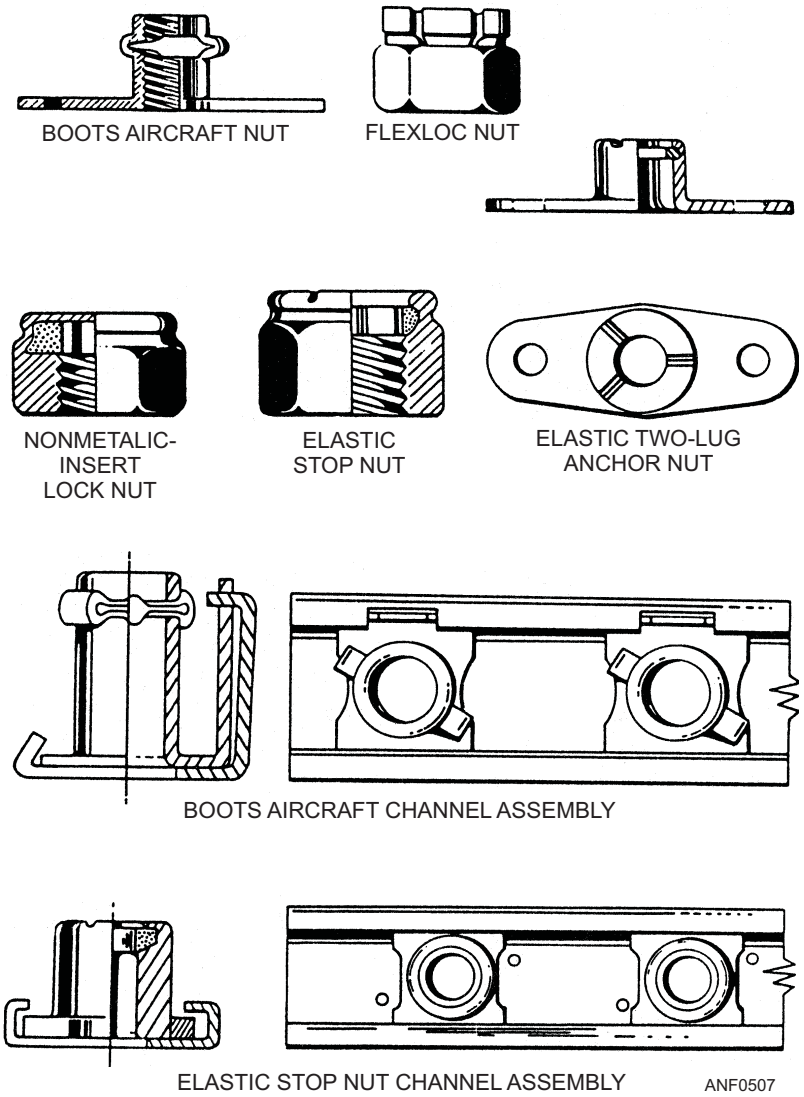

Figure 5-7.—Self-locking nuts.

The elastic stop nut is constructed with a nonmetallic (nylon) insert, which is designed to lock the nut in place. The insert is unthreaded and has a smaller diameter than the inside diameter of the nut.

Self-locking nuts are generally suitable for reuse in noncritical applications provided the threads have not been damaged. If the locking material has not been damaged or permanently distorted, it can be reused.

NOTE: If any doubt exists about the condition of a nut, use a new one!

When you anchor lightweight parts, the sheet spring nut may be used. See figure 5-8. Applications include supporting line clamps, electrical equipment, and small access doors. It is made of sheet spring steel and is cut so as to have two flaps. The ends of these flaps are notched to form a hole that is somewhat smaller in diameter than the screw used. The sheet spring nut has a definite arch that tends to flatten out as the screw pulls the flaps in toward the threads. This flattening action forces the flaps of the nut tightly into the threads of the screw. The springiness of the sheet spring nut pushes upward on the screw threads, binding them and locking the screw in place. With the sheet spring nut, either a standard or a sheet metal self-tapping screw is used.

INSTALLATION OF NUTS AND BOLTS

You must be certain that each bolt is made of the correct material. Examine the markings on the head to determine whether a bolt is steel or aluminum alloy.

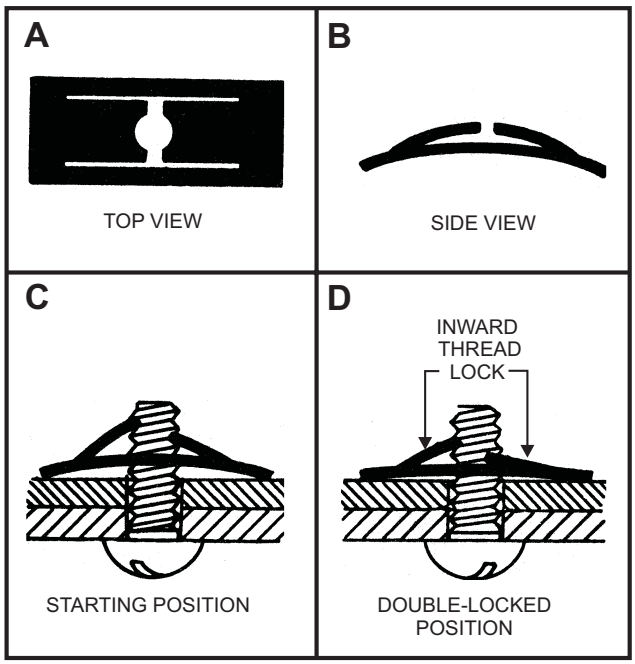

ANF0508

Figure 5-8.—Sheet spring nut.

It is of extreme importance to use like bolts in replacement. In every case, refer to the applicable maintenance instruction manual and illustrated parts breakdown.

Be sure that washers are used under the heads of both bolts and nuts unless their omission is specified. A washer guards against mechanical damage to the material being bolted and prevents corrosion of the structural members. An aluminum alloy washer may be used under the head and nut of a steel bolt securing aluminum alloy or magnesium alloy members. Corrosion will attack the washer rather than the members. Steel washers should be used when joining steel members with steel bolts.

Whenever possible, the bolt should be placed with the head on top or in the forward position. This positioning helps prevent the bolt from slipping out if the nut is accidentally lost.

Make sure that the bolt grip length is correct. Generally speaking, the grip length should equal the thickness of the material being bolted together. Not more than one thread should bear on the material, and the shank should not protrude too far through the nut. Figure 5-2 shows examples of correct and incorrect grip length.

Application of Torque

Torque is the amount of twisting force applied when you are tightening a nut. If torque values are specified in the appropriate manual, a torque wrench must be used. Regardless of whether torque values are specified or not, all nuts in a particular installation must be tightened a like amount. This permits each bolt in a group to carry its share of the load. It is a good practice to use a torque wrench in all applications.

Safetying of Nuts and Bolts

It is very important that all nuts except the self-locking type be safetied after installation. This prevents nuts from loosening in flight because of vibration. Methods of safetying are discussed later in this chapter.

Q5-2. What are the three principal parts of a bolt?

Q5-3. What are the three most commonly used screws in aircraft construction?

Q5-4. What general group of aircraft nuts require an external locking device, such as cotter pins, safety wire, or locknuts?

Q5-5. What is the purpose of placing a washer under the head of a bolt?

TURNLOCK FASTENERS

LEARNING OBJECTIVE: Recognize the three common types of turnlock fasteners (quick-action panel fasteners) and how they operate.

Turnlock fasteners are used to secure plates, doors, and panels that require frequent removal for inspection and servicing. Turnlock fasteners are also referred to as quick-action panel fasteners. These fasteners are available in several different styles and are usually referred to by the manufacturer's trade name. Some of the most common are the Camloc, Airloc, and Dzus.

CAMLOC FASTENERS

The Camloc 4002 series fastener consists of four principal parts—receptacle, grommet, retaining ring, and stud assembly. See figure 5-9. The receptacle consists of an aluminum alloy forging mounted in a stamped sheet metal base. The receptacle assembly is riveted to the access door frame, which is attached to the structure of the aircraft. The grommet is a sheet metal ring held in the access panel by the retaining ring. Grommets are available in two types—the flush type and the protruding type. In addition to serving as the grommet for the hole in the access panel, it also holds the stud assembly. The stud assembly consists of a stud, cross pin, spring, and spring cup. The assembly is designed so that it can be quickly inserted into the grommet by compression of the spring. Once installed in the grommet, the stud assembly cannot be removed unless the spring is again compressed.

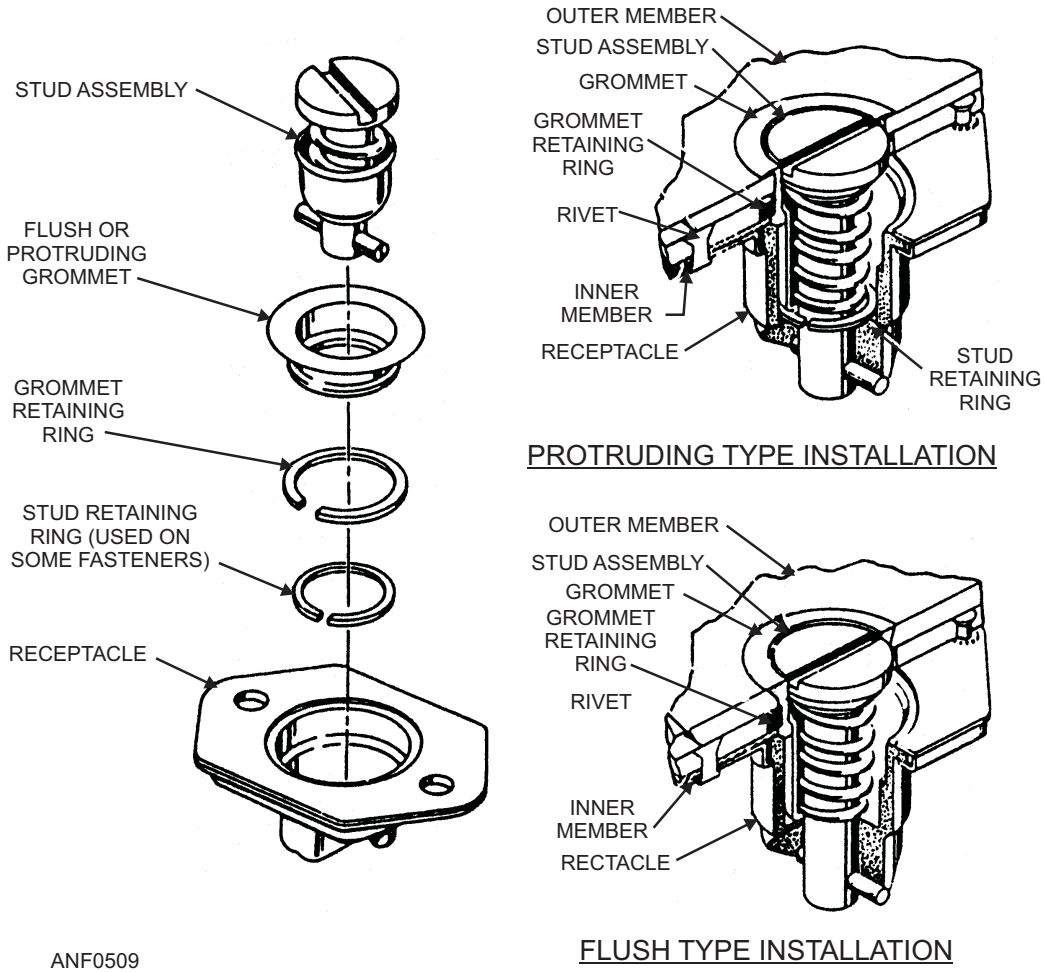

Figure 5-9.—Camloc 4002 series fastener.

The Camloc high-stress panel fastener, shown in figure 5-10, is a high-strength, quick-release, rotary-type fastener. It may be used on flat or curved, inside or outside panels. The fastener may have either a flush or protruding stud. The studs are held in the panel with flat or cone-shaped washers. The latter being used with flush fasteners in dimpled holes. This fastener may be distinguished from screws by the deep No. 2 Phillips recess in the stud head and by the bushing in which the stud is installed.

AIRLOCK FASTENERS

Figure 5-11 shows the parts that make up an Airloc fastener. Similar to the Camloc fastener, the Airloc fastener consists of a receptacle, stud, and cross pin. The stud is attached to the access panel and is held in place by the cross pin. The receptacle is riveted to the access panel frame.

Two types of Airloc receptacles are available—the fixed type (view A) and the floating type (view B). The floating type makes for easier alignment of the stud in the receptacle. Several types of studs are also available. In each instance the stud and cross pin come as separate units so that the stud may be easily installed in the access panel.

DZUS FASTENERS

Dzus fasteners are available in two types. One is the light-duty type, used on box covers, access hole covers, and lightweight fairing. The second is the heavy-duty type, which is used on cowling and heavy fairing. The main difference between the two types of Dzus fasteners is a grommet, used with the heavy-duty fasteners. Otherwise their construction features are about the same.

Figure 5-12 shows the parts making up a light-duty Dzus fastener. Notice that they include a spring and a stud. The spring is made of cadmium-plated steel music wire and is usually riveted to an aircraft structural member. The stud comes in a number of designs (as shown in views A, B, and C) and mounts in a dimpled hole in the cover assembly.

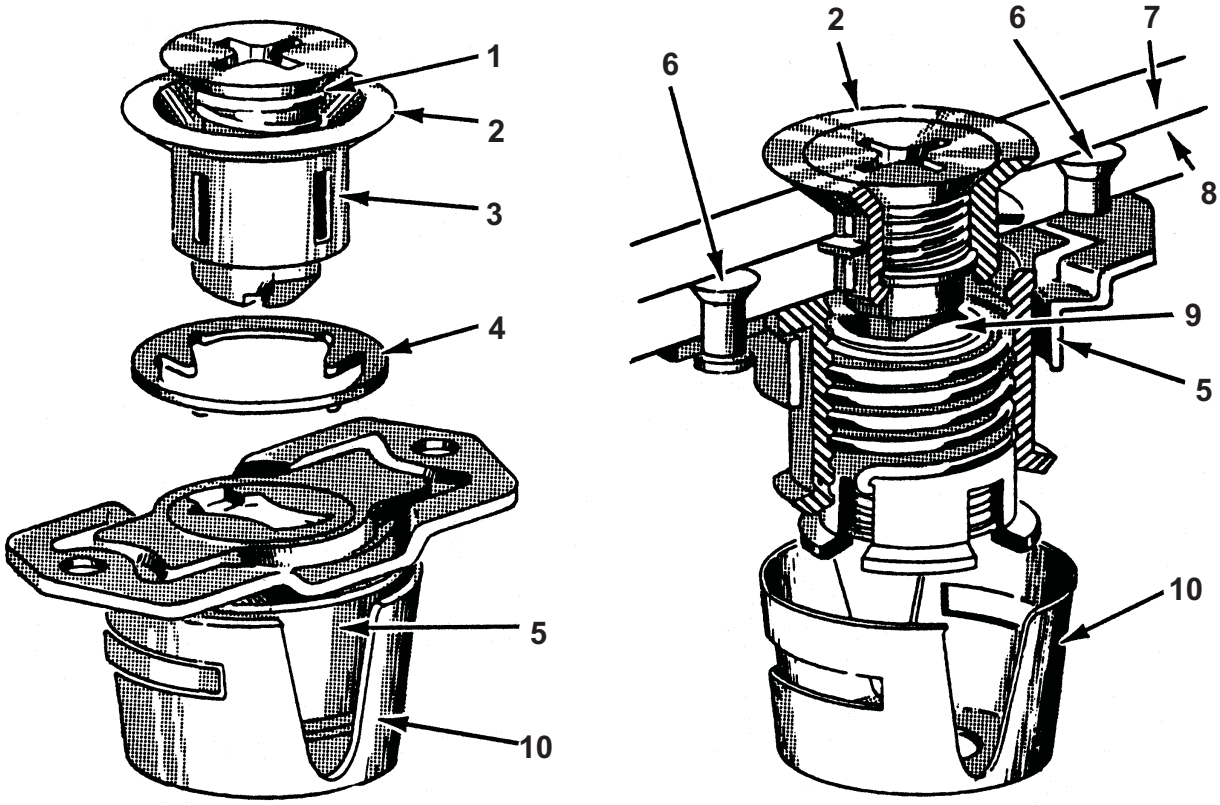

1. TENSION SPRING
2. STUD ASSEMBLY
3. RETAINING RING
4. RETAINING RING
5. RECEPTACLE ASSEMBLY
6. RECEPTACLE ATTACHING RIVETS
7. OUTER SKIN
8. INNER SKIN
9. INSERT
10. COVER

ANF0510

Figure 5-10.—Camloc high-stress panel fastener.

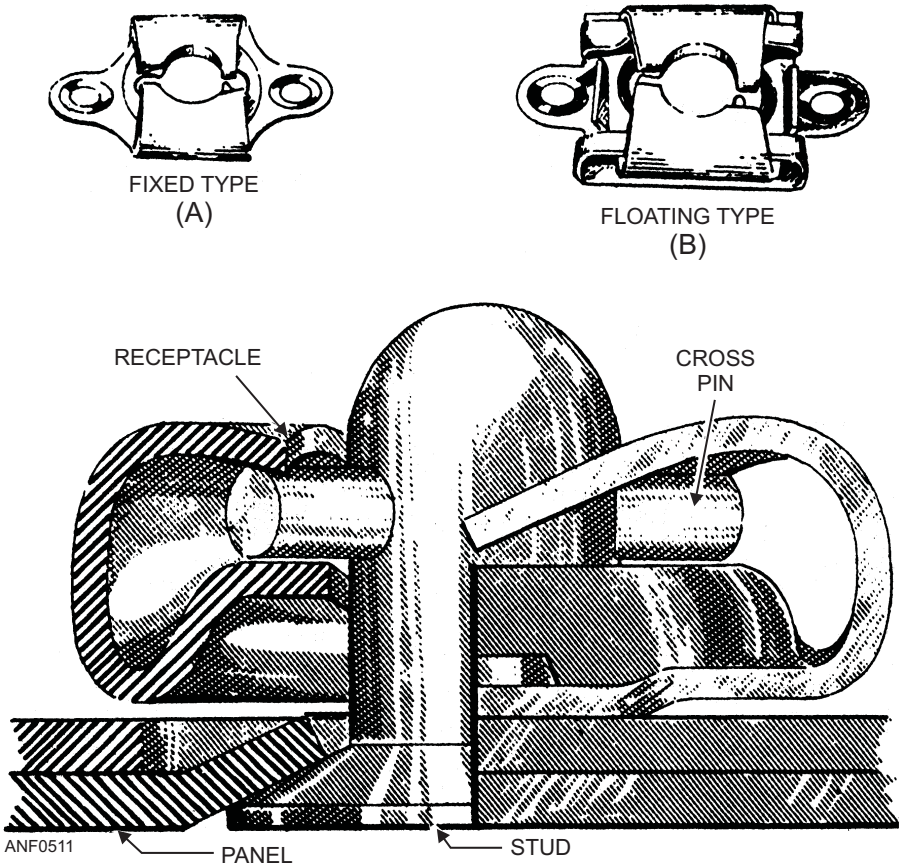

Figure 5-11.—Airloc fastener.

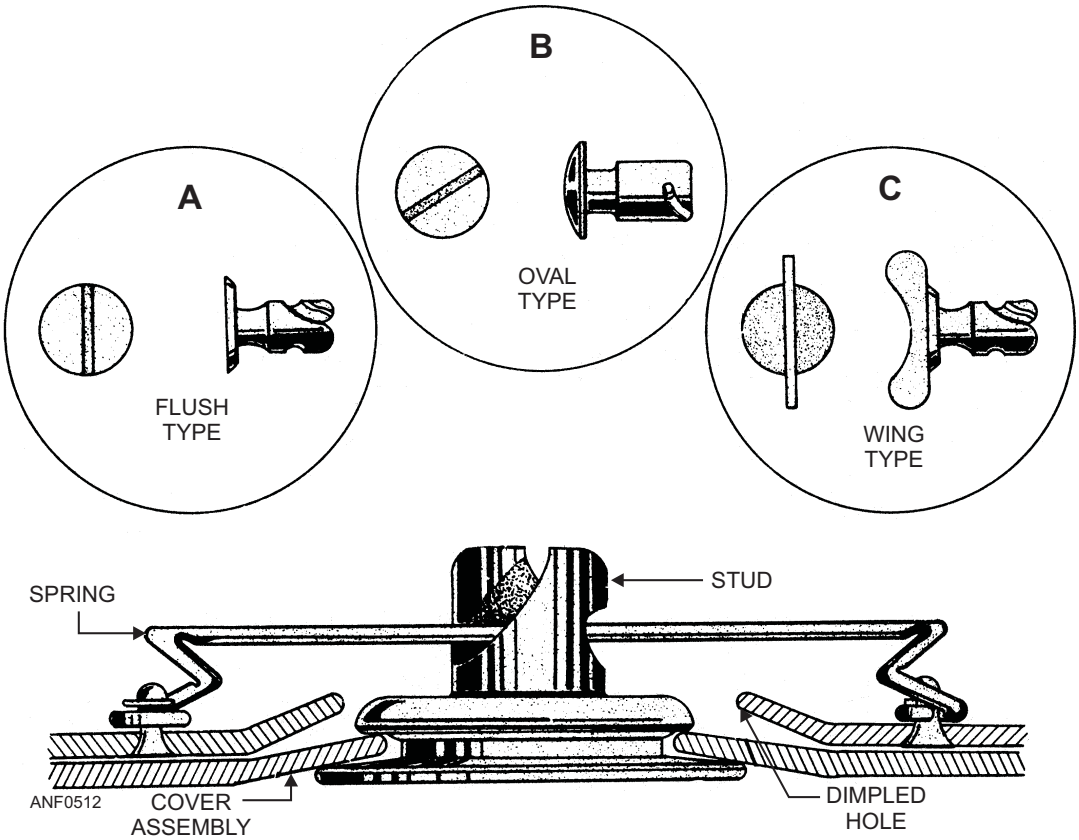

Figure 5-12.—Dzus fastener.

Position the panel or plate on the aircraft before securing it in place. The spring riveted to the structural member enters the hollow center of the stud, which is retained in the plate or panel. Then, when the stud is turned about one-fourth turn, the curved jaws of the stud slip over the spring and compress it. The resulting tension locks the stud in place, thereby securing the panel or plate.

Q5-6. What are the three most common types of turnlock fasteners?

RIVETS

LEARNING OBJECTIVE: Identify the solid rivets, blind rivets, and rivnuts commonly used in aircraft construction.

There are hundreds of thousands of rivets in the airframe of a modern aircraft. This is an indication of how important rivets are in the construction of aircraft. A glance at any aircraft will disclose the thousands of rivets in the outer skin alone. In addition to being used in the skin, rivets are used in joining spar and rib sections. They are also used for securing fittings to various parts of the aircraft, and for fastening bracing members and other parts together. Rivets that are satisfactory for one part of the aircraft are often unsatisfactory for another part.

Two of the major types of rivets used in aircraft construction are the solid rivet and the blind rivet. The solid rivet must be driven with a bucking bar. The blind rivet is installed when a bucking bar cannot be used.

SOLID RIVETS

Solid rivets are classified by their head shape, size, and the material from which they are manufactured. Rivet head shapes and their identifying code numbers are shown in figure 5-13. The prefix MS identifies hardware under the control of the Department of Defense and that the item conforms to military standards. The prefix AN identifies specifications that are developed and issued under joint authority of the Air Force and the Navy. Solid rivets have five different head shapes. They are the round head, flat head, countersunk head, brazier head, and universal head rivets.

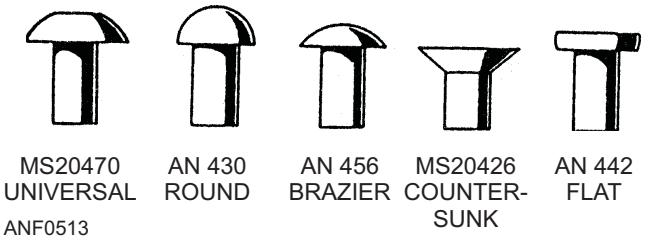

Figure 5-13.—Rivet head shapes and code numbers.

Round Head Rivets

Round head rivets are used on internal structures where strength is the major factor and streamlining is not important.

Flat Head Rivets

Flat head rivets, like round head rivets, are used in the assembly of internal structures where maximum strength is required. They are used where interference of nearby members does not permit the use of round head rivets.

Countersunk Head Rivets

Countersunk head rivets, often referred to as flush rivets, are used where streamlining is important. On combat aircraft practically all external surfaces are flush riveted. Countersunk head rivets are obtainable with heads having an inclined angle of 78 and 100 degrees. The 100-degree angle rivet is the most commonly used type.

Brazier Head Rivets

Brazier head rivets offer only slight resistance to the airflow and are used frequently on external surfaces, especially on noncombat-type aircraft.

Universal Head Rivets

Universal head rivets are similar to brazier head rivets. They should be used in place of all other protruding-head rivets when existing stocks are depleted.

BLIND RIVETS

There are many places on an aircraft where access to both sides of a riveted structural part is impossible. When attaching many nonstructural parts, the full strength of solid-shank rivets is not necessary and their use adds extra weight. For use in such places, rivets have been designed that can be formed from the outside. They are lighter than solid-shank rivets but are amply strong. Such rivets are referred to as blind rivets

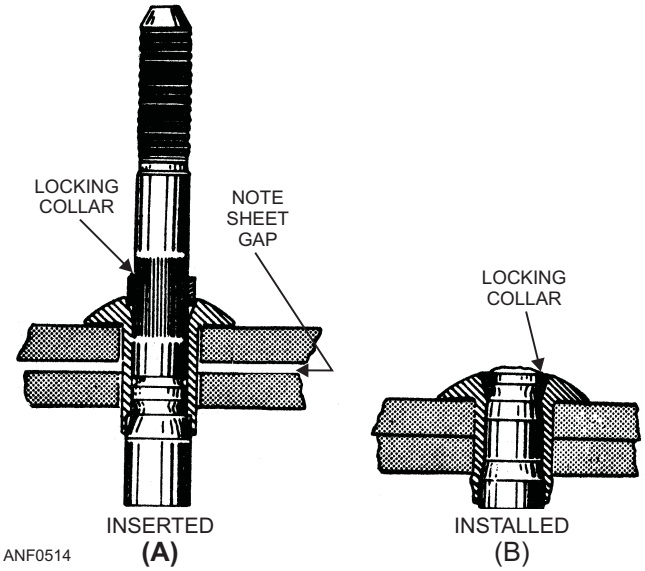

Figure 5-14.—Self-plugging rivet (mechanical lock).

or self-plugging because of the self-heading feature. Figure 5-14 shows a general type of blind rivet.

RIVNUTS

The rivnut is a hollow aluminum rivet that is counterbored and threaded on the inside. The rivet is installed with the aid of a special tool. Rivnuts are used primarily as a nut plate. They may be used as rivets in secondary structures such as instruments, brackets, and soundproofing materials. After rivnuts are installed, accessories can be fastened in place with screws.

Rivnuts are manufactured in two head styles, countersunk and flat, and in two shank designs, open and closed ends. See figure 5-15.

Open-end rivnuts are the most widely used. They are preferred in place of the closed-end type. However, in sealed flotation or pressurized compartments, the closed-end rivnut **must** be used.

Further information concerning rivets may be found in *Aviation Structural Mechanic (H&S) 3 & 2*, NAVEDTRA 12338.

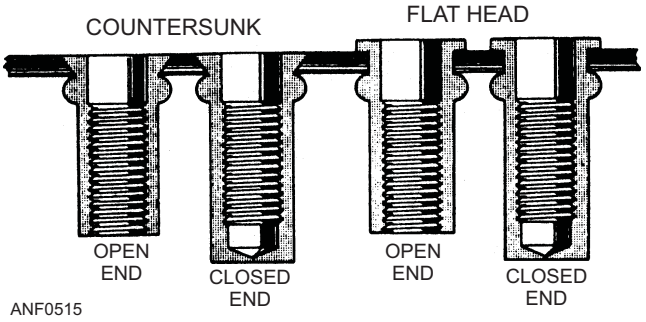

Figure 5-15.—Sectional view of rivnut showing head and end designs.

Q5-7. What are the two major types of rivets used in aircraft construction?

Q5-8. What type of rivets are used where streamlining is important?

MISCELLANEOUS FASTENERS

LEARNING OBJECTIVE: Recognize the miscellaneous fastener used to fasten special purpose units.

Some fasteners cannot be classified as rivets, turnlocks, or threaded fasteners. Included in this category are snap rings, turnbuckles, taper pins, flat head pins, and flexible connector/clamps.

SNAP RINGS

A snap ring is a ring of metal, either round or flat in cross section, that is tempered to have springlike action. This springlike action holds the snap ring firmly seated in a groove. The external types are designed to fit in a groove around the outside of a shaft or cylinder. The internal types fit in a groove inside a cylinder. A special type of pliers is made to install each type of snap ring. Snap rings may be reused as long as they retain their shape and springlike action.

TURNBUCKLES

A turnbuckle is a mechanical screw device consisting of two threaded terminals and a threaded barrel. Figure 5-16 shows a typical turnbuckle assembly.

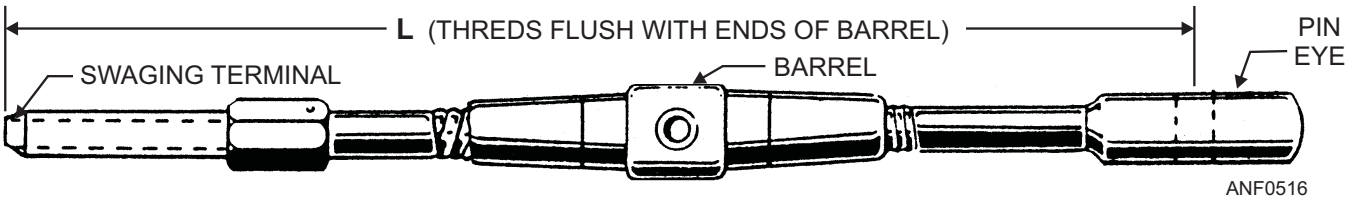

Figure 5-16.—Typical turnbuckle assembly.

Turnbuckles are fitted in the cable assembly for the purpose of making minor adjustments in cable length and for adjusting cable tension. One of the terminals has right-hand threads and the other has left-hand threads. The barrel has matching right- and left-hand internal threads. The end of the barrel with the left-hand threads can usually be identified by a groove or knurl around that end.

When installing a turnbuckle in a control system, it is necessary to screw both of the terminals an equal number of turns into the barrel. It is also essential that you screw both turnbuckle terminals into the barrel until not more than three threads are exposed.

After you adjust a turnbuckle properly, it must be safetied. We will discuss the methods of safetying turnbuckles later in this chapter.

TAPER PINS

Taper pins are used in joints that carry shear loads and where the absence of clearance is essential. See figure 5-17. The threaded taper pin is used with a taper pin washer and a shear nut if the taper pin is drilled. Use a self-locking nut if the taper pin is undrilled. When a shear nut is used with the threaded taper pin and washer, the nut is secured with a cotter pin.

FLAT HEAD PINS

The flat head pin is used with tie-rod terminals or secondary controls, which do not operate continuously. The flat head pin should be secured with a cotter pin. The pin is normally installed with the head up. See figure 5-17, view C. This precaution is taken to maintain the flat head pin in the installed position in case of cotter pin failure.

FLEXIBLE CONNECTORS/CLAMPS

Some of the most commonly used clamps are shown in figure 5-18. When installing a hose between two duct sections, the gap between the duct ends should be one-eighth inch minimum to three-fourths inch maximum. When you install the clamps on the connection, the clamp should be one-fourth inch minimum from the end of the connector. Misalignment between the ducting ends should not exceed one-eighth inch maximum.

Marman type clamps, commonly used in ducting systems, should be tightened to the torque value indicated on the coupling. Use the torque value as specified on the clamp or in the applicable maintenance instruction manual.

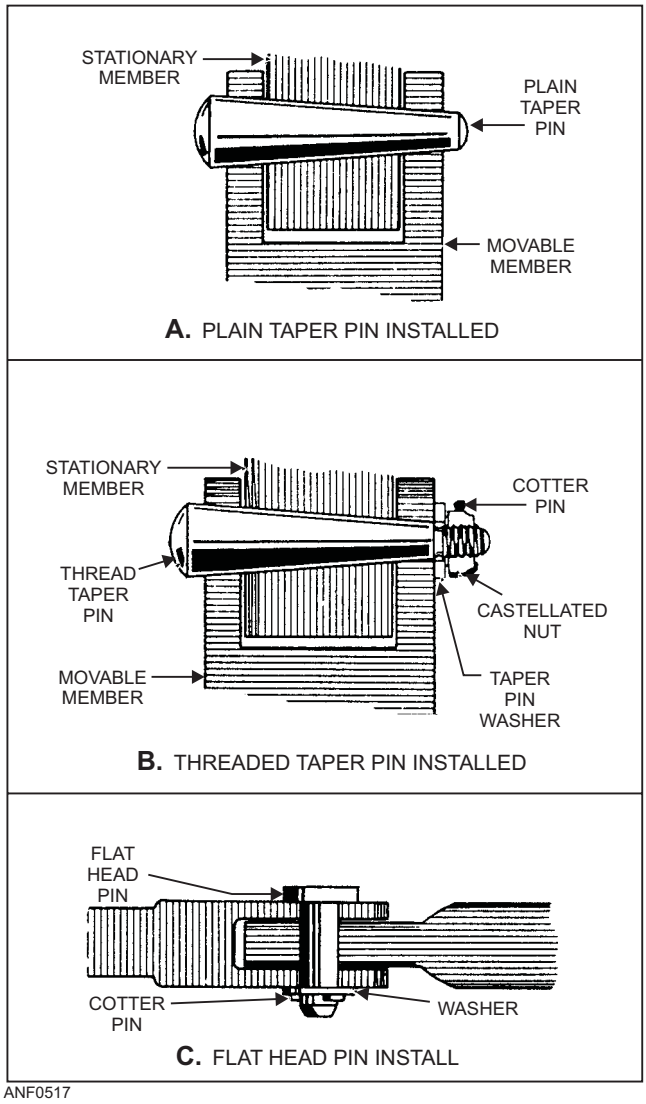

Figure 5-17.—Types of aircraft pins.

Q5-9. What are five fasteners that are included in the category of miscellaneous fasteners?

AIRCRAFT ELECTRICAL SYSTEM HARDWARE

LEARNING OBJECTIVE: Identify the special hardware found in an aircraft's electrical system.

An important part of aircraft electrical maintenance is determining the correct type of electrical hardware for a given job. You must become familiar with wire and cable, connectors, terminals, and bonding.

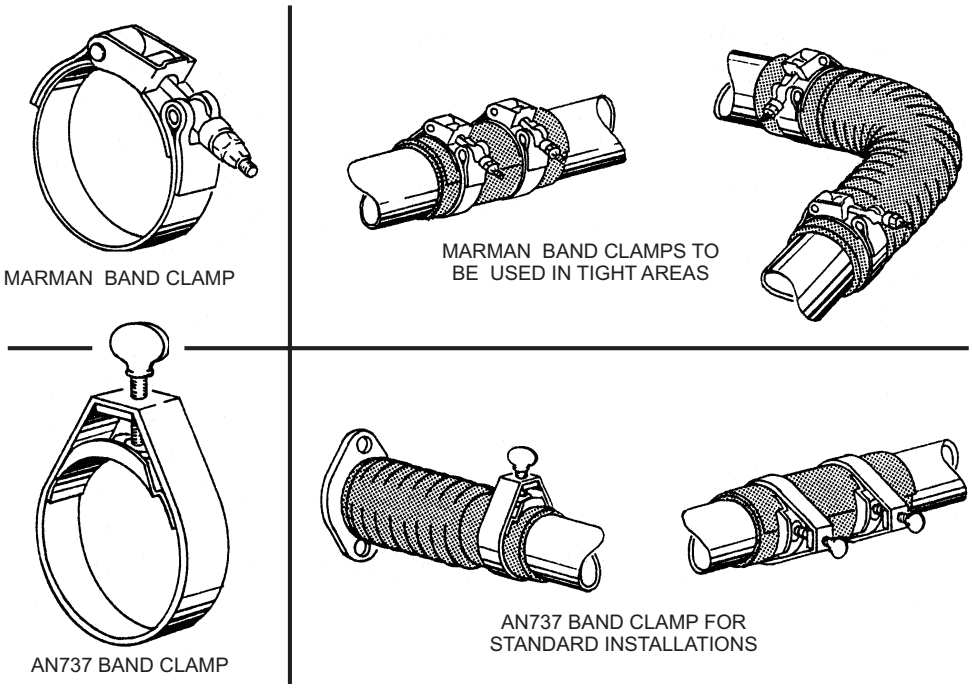

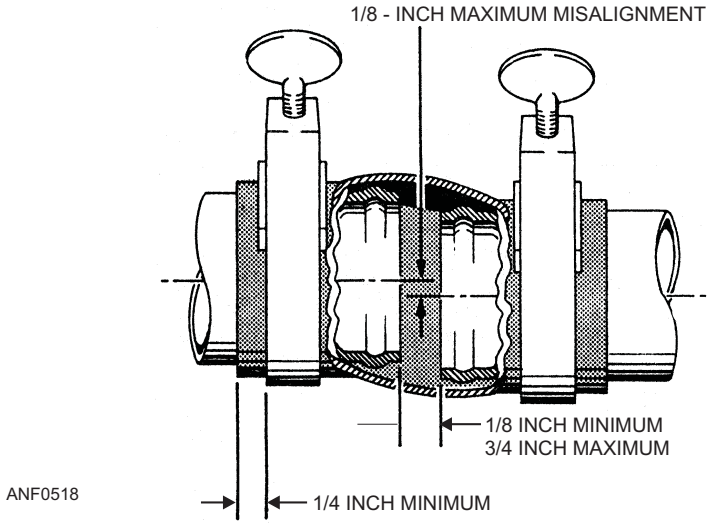

Figure 5-18.—Flexible line connectors.

WIRE AND CABLE

For purposes of electrical installations, a wire is described as a stranded conductor covered with an insulating material. The term *cable*, as used in aircraft electrical installations, includes the following:

- Two or more insulated conductors contained in the same jacket (multiconductor cable)
- Two or more insulated conductors twisted together (twisted pair)
- One or more insulated conductors covered with a metallic braided shield (shielded cable)
- A single insulated conductor with a metallic braided outer conductor (RF cable)

For wire replacement work, the aircraft maintenance instruction manual should be consulted first. The manual normally lists the wire used in a given aircraft.

CONNECTORS

Connectors are devices attached to the ends of cables and sets of wires to make them easier to connect and disconnect. Each connector consists of a plug assembly and a receptacle assembly. The two

assemblies are coupled by means of a coupling nut. Each consists of an aluminum shell containing an insulating insert that holds the current-carrying contacts. The plug is usually attached to the cable end, and is the part of the connector on which the coupling nut is mounted. The receptacle is the half of the connector to which the plug is connected. It is usually mounted on a part of the equipment. One type of connector commonly used in aircraft electrical systems is shown in figure 5-19.

TERMINALS

Since most aircraft wires are stranded, it is necessary to use terminal lugs to hold the strands together. This allows a means of fastening the wires to terminal studs. The terminals used in electrical wiring are either of the soldered or crimped type. Terminals used in repair work must be of the size and type specified in the applicable maintenance instruction manual. The crimped-type terminals are generally recommended for use on naval aircraft. Soldered-type terminals are usually used in emergencies only.

The basic types of solderless terminals are shown in figure 5-20. They are the straight, right angle, flag, and splice types. There are variations of these types.

BONDING

When you connect all the metal parts of an aircraft to complete an electrical unit, it is called bonding. Bonding connections are made of screws, nuts, washers, clamps, and bonding jumpers. Figure 5-21 shows a typical bonding link installation.

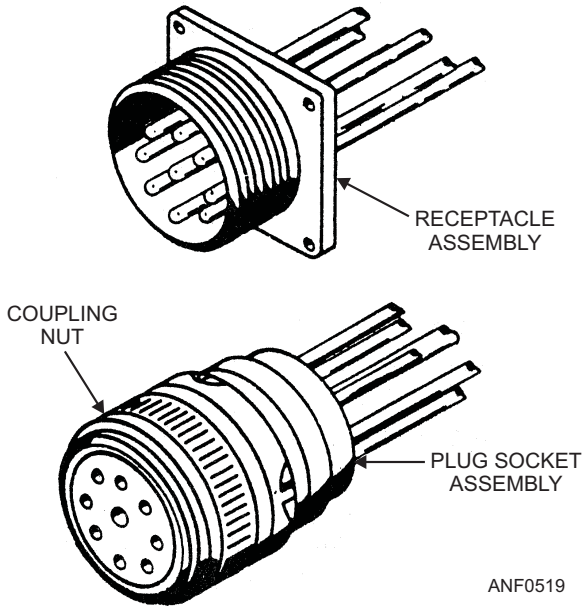

Figure 5-19.—Connector assembly.

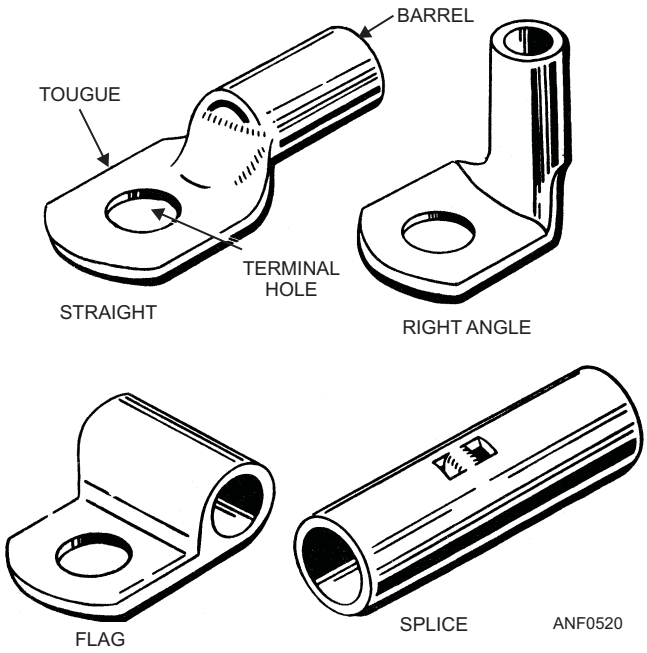

Figure 5-20.—Basic types of solderless terminals.

An aircraft can become highly charged with static electricity while in flight. If the aircraft is improperly bonded, all metal parts do not have the same amount of static charge. A difference of potential exists between the various metal surfaces. If the resistance between insulated metal surfaces is great enough, charges can accumulate. The potential difference could become high enough to cause a spark. This constitutes a fire hazard and also causes radio interference. If lighting strikes an aircraft, a good conducting path for heavy current is necessary to minimize severe arcing and sparks.

Bonding also provides the necessary low-resistance return path for single-wire electrical systems. This low-resistance path provides a means of bringing the entire aircraft to the earth's potential when it is grounded.

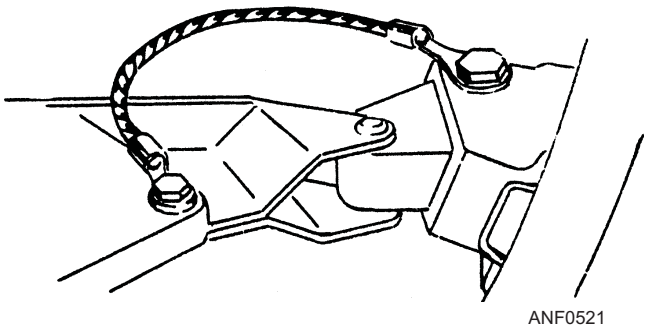

Figure 5-21.—Typical bonding link installation.

When you perform an inspection, both bonding connections and safetying devices must be inspected with great care.

Q5-10. What manual should you consult to find correct replacement wires for a given aircraft?

SAFETY METHODS

LEARNING OBJECTIVE: Recognize the procedures for the safetying of fasteners and electrical system hardware.

Safetying is a process of securing all aircraft bolts, nuts, capscrews, studs, and other fasteners. Safetying prevents the fasteners from working loose due to vibration. Loose bolts, nuts, or screws can ruin engines or cause parts of the aircraft to drop off. To carry out an inspection on an aircraft, you must be familiar with the various methods of safetying. Careless safetying is a sure road to disaster. Always use the proper method for safetying. Always safety a part you have just unsafetied before going on to the next item of inspection. You should always inspect for proper safetying throughout the area in which you are working.

There are various methods of safetying aircraft parts. The most widely used methods are safety wire, cotter pins, lock washers, snap rings, and special nuts. Some of these nuts and washers have been described previously in this chapter.

SAFETY WIRING

Safety wiring is the most positive and satisfactory method of safetying. It is a method of wiring together two or more units. Any tendency of one unit to loosen is counteracted by the tightening of the wire.

Nuts, Bolts, and Screws

Nuts, bolts, and screws are safety wired by the single-wire double-twist method. This method is the most common method of safety wiring. A single-wire may be used on small screws in close spaces, closed electrical systems, and in places difficult to reach.

Figure 5-22 illustrates the following steps required to install a standard double-twist safety wire for two bolts with right-hand threads.

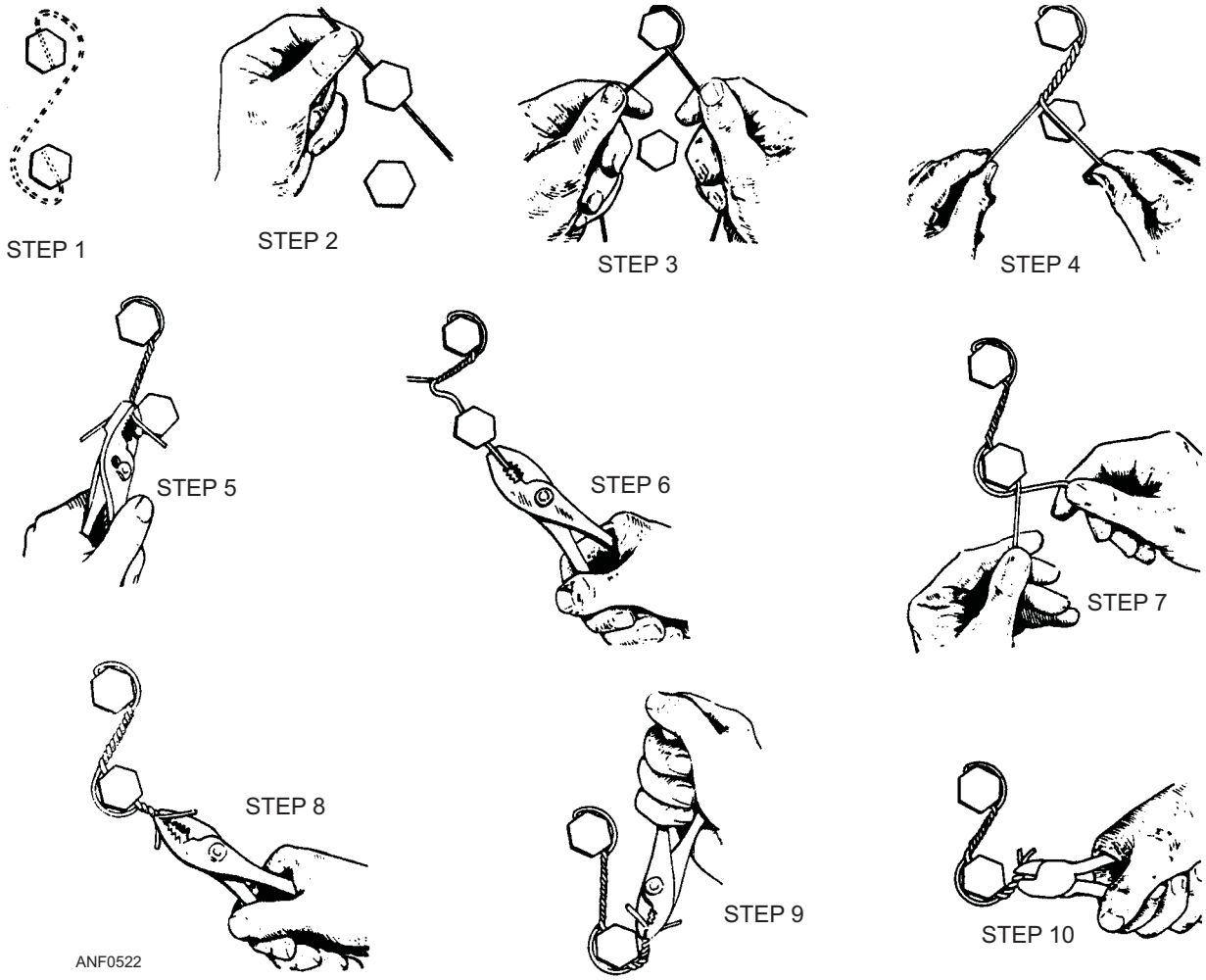

Figure 5-22.—Standard double-twist safety wire installation procedures.

Step 1. Assemble the unit. Torque the bolts and carefully align the safety wire holes.

Step 2. Insert the proper size wire through the hole in the first bolt.

Step 3. Bend the left end of the wire clockwise around the bolt head and **under** the other end of the wire.

Step 4. Pull the loop tight against the bolt head. Grasp both ends of the wire. Twist them in a clockwise direction until the end of the braid is just short of the second bolt.

Step 5. Check to ensure that the loop is still tightly in place around the first bolt head. Grasp the wire with pliers just beyond the end of the braid. While holding it taut, twist it in a clockwise direction until the braid is stiff.

NOTE: The braid must be tight enough to resist friction or vibration wear, but should not be overtightened.

Step 6. Insert the upper end of the safety wire through the hole in the second bolt. Pull the braid until it is taut.

Step 7. Bring the other end of the wire counter-clockwise around the bolt head and **under** the protruding wire end.

Step 8. Tighten the loop and braid the wire ends in a counterclockwise direction. Grasp the wire with the pliers just beyond the end of the braid and twist in a counterclockwise direction until the braid is stiff. Make sure you keep the wire under tension.

Step 9. With a final twisting motion, bend the braid to the right and against the head of the bolt.

Step 10. Cut the braid, being careful that between three and six full twists still remain. Avoid sharp projecting ends.

Figure 5-23 shows various methods commonly used in safety wiring nuts, bolts, and screws. Examples 1, 2, and 5 of figure 5-23 show the proper method of safety wiring bolts, screws, square head plugs, and similar parts when wired in pairs. Examples 6 and 7 show a single-threaded component wired to a housing or lug. Example 3 shows several components wired in series. Example 4 shows the proper method of wiring castellated nuts and studs. Note that there is no loop around the nut. Example 8 shows several components in a closely spaced, closed geometrical pattern, using the single-wire method.

When drilled-head bolts, screws, or other parts are grouped together, they are more conveniently safety wired to each other in a series rather than individually. The number of nuts, bolts, or screws that may be safety wired together depends on the application. For instance, when you are safety wiring widely spaced bolts by the double-twist method, a group of three should be the maximum number in a series.

When you are safety wiring closely spaced bolts, the number that can be safety wired by a 24-inch length of wire is the maximum in a series. The wire is arranged in such a manner that if the bolt or screw begins to loosen, the force applied to the wire is in the tightening direction.

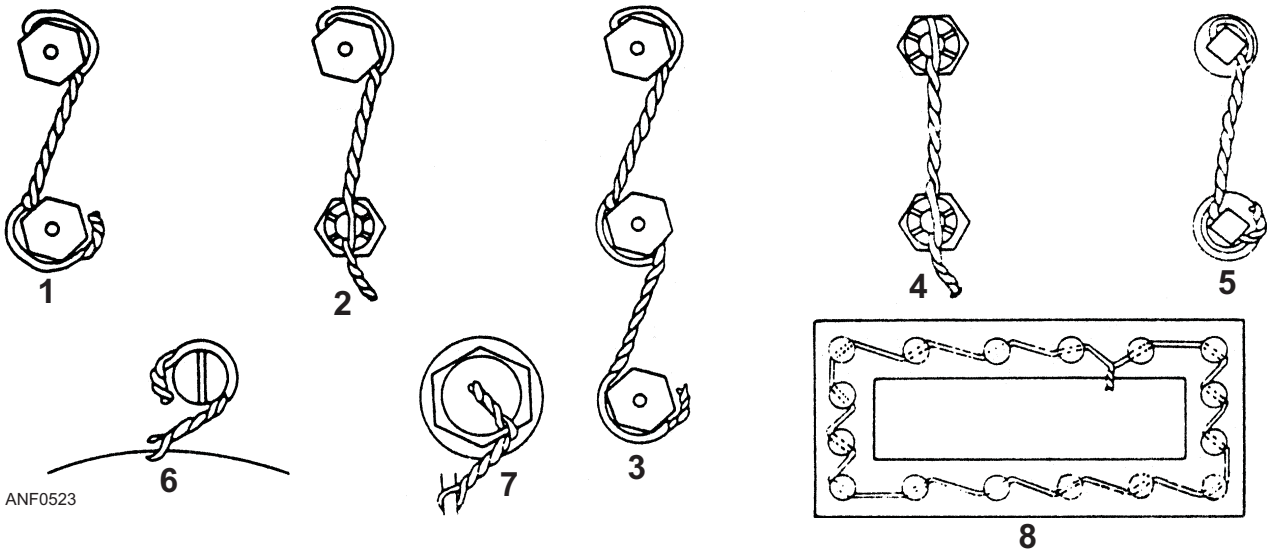

Figure 5-23.—Safety wiring methods.

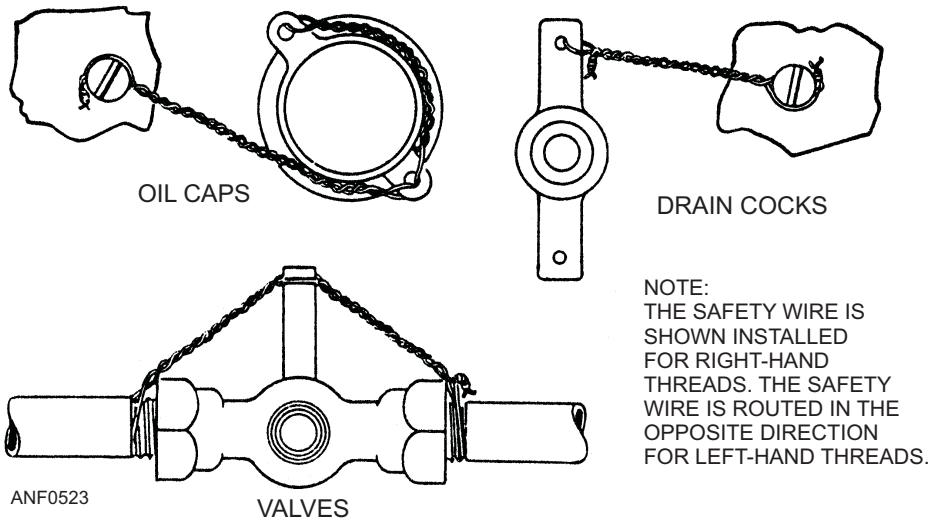

Figure 5-24.—Safety wiring oil caps, drain cocks, and valves.

Torque all parts to the recommended values, and align holes before you attempt to proceed with the safetying operation. Never overtorque or loosen a torqued nut to align safety wire holes.

Oil Caps, Drain Cocks, and Valves

These units are safety wired as shown in figure 5-24. In the case of the oil cap, the wire is anchored to an adjacent fillister head screw. This system applies to any other unit that must be safety wired individually. Ordinarily, anchorage lips are conveniently located near these individual parts. When this provision is not made, the safety wire is fastened to some adjacent part of the assembly.

Electrical Connectors

Under conditions of severe vibration, the coupling nut of a connector may vibrate loose. With sufficient vibration, the connector could come apart. When this occurs, the circuit carried by the cable opens. The proper protective measure to prevent this occurrence is by safety wiring, as shown in figure 5-25. The safety wire should be as short as practicable. It must be installed in such a manner that the pull on the wire is in the direction that tightens the nut on the plug.

Turnbuckles

After you adjust a turnbuckle properly, safety it. There are several methods of safetying turnbuckles. Only two of these methods have been adopted by the military services. These methods are shown in views

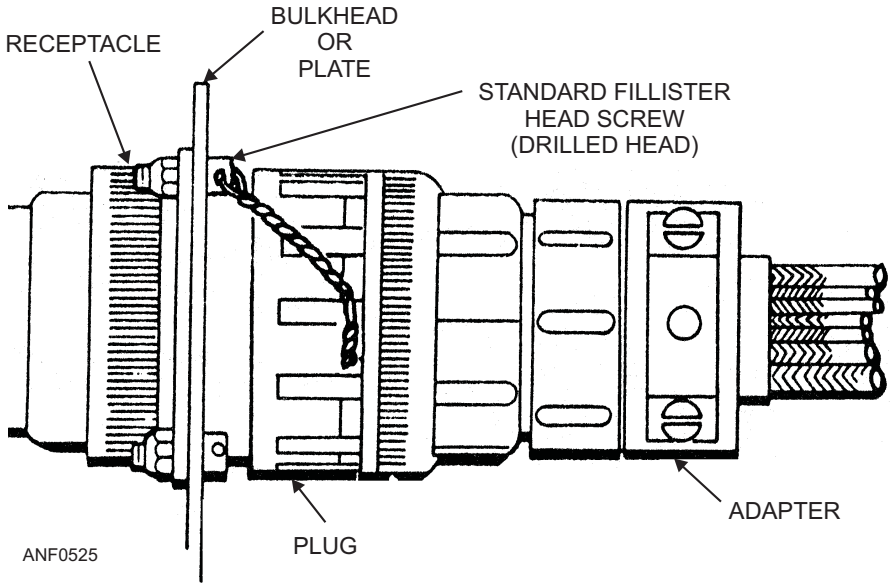

Figure 5-25.—Safety wiring attachment for plug connectors.

(A) and (B) of figure 5-26. The clip-locking method is used only on the most modern aircraft. An example of an aircraft using this method is the EA-6B. These aircraft use a turnbuckle that is designed for use with the wire clip. The older type of aircraft still use the turnbuckles that require the wire-wrapping method.

Detailed instructions for using both the clip-locking and the wire-wrapping methods of safetying turnbuckles can be found in *Aviation Structural Mechanic (H&S) 3 & 2*, NAVEDTRA 12338.

GENERAL SAFETY WIRING RULES

When you use the safety wire method of safetying, follow these general rules:

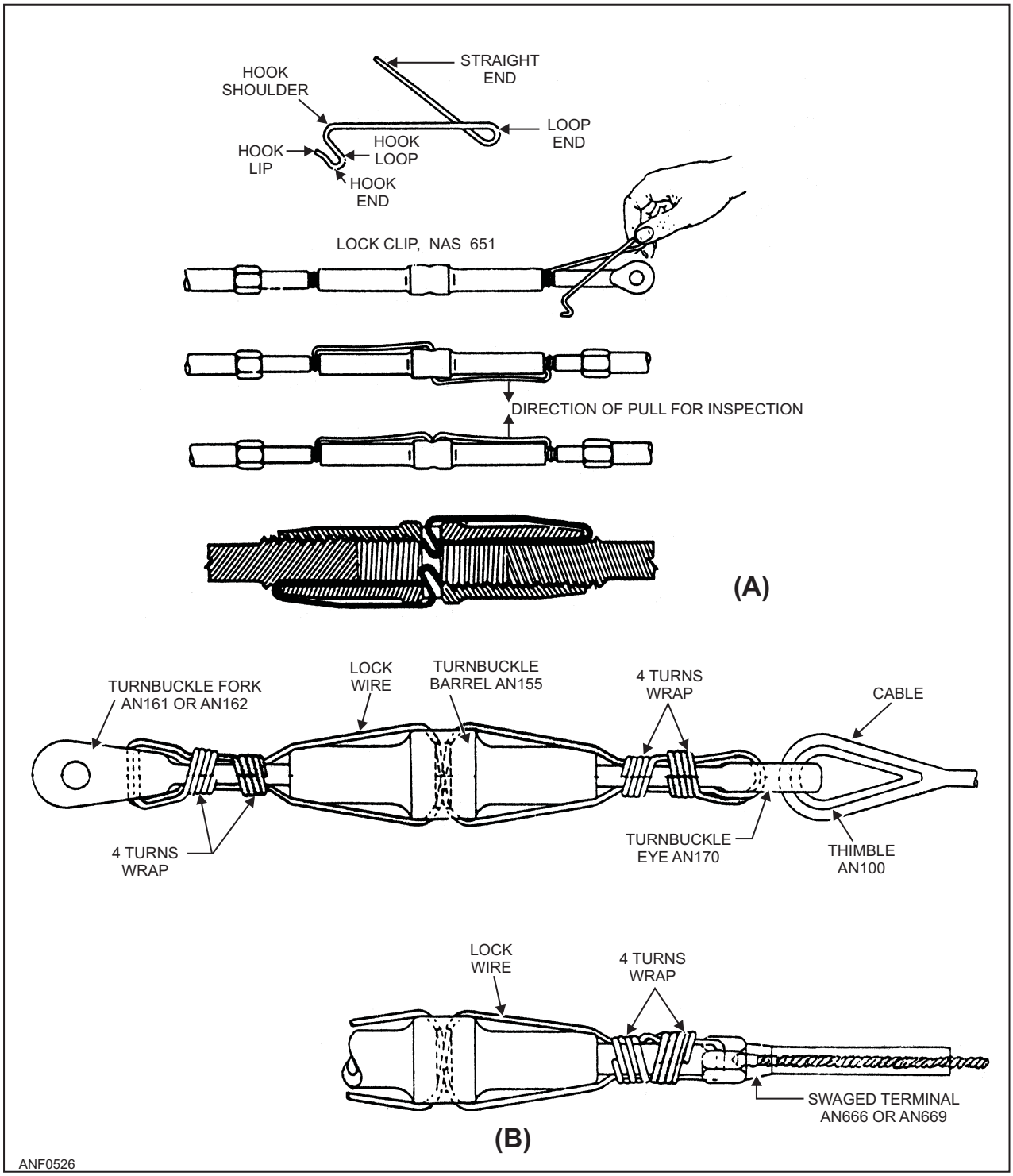

Figure 5-26.—Safetying turnbuckles. (A) Clip-locking method; (B) wire-wrapping method.

1. A pigtail of one-fourth to one-half inch (three to six twists) should be made at the end of the wiring. This pigtail must be bent back or under to prevent it from becoming a snag.

2. The safety wire must be new upon each application.

3. When you secure castellated nuts with safety wire, tighten the nut to the low side of the selected torque range, unless otherwise specified. If necessary, continue tightening until a slot aligns with the hole.

4. All safety wires must be tight after installation, but not under such tension that normal handling or vibration will break the wire.

5. Apply the wire so that all pull exerted by the wire tends to tighten the nut.

6. Twists should be tight and even, and the wire between the nuts should be as taut as possible without being overtwisted.

COTTER PINS

Use cotter pins to secure bolts, screws, nuts, and pins. Some cotter pins are made of low-carbon steel, while others consist of stainless steel, and thus are more resistant to corrosion. Use stainless steel cotter pins in locations where nonmagnetic material is required. Regardless of shape or material, use all cotter pins for the same general purpose—safetying. Figure 5-27 shows three types of cotter pins and how their size is determined.

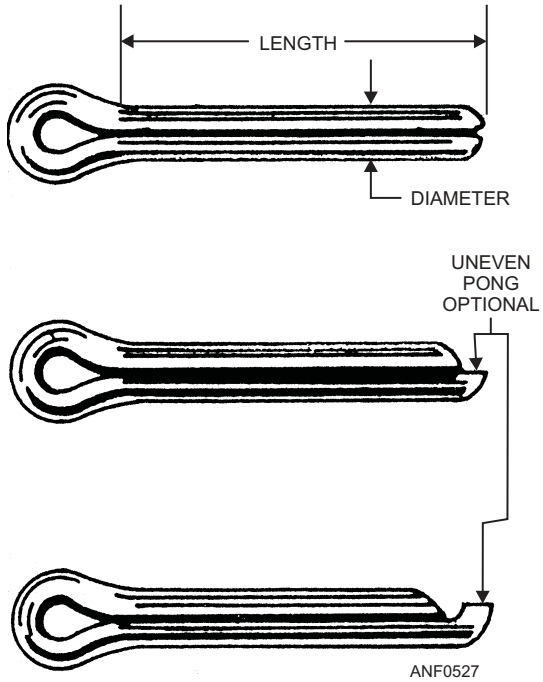

Figure 5-27.—Types of cotter pins.

NOTE: Whenever uneven-prong cotter pins are used, the length measurement is to the end of the shorter prong.

Cotter pin installation is shown in figure 5-28. Use castellated nuts with bolts that have been drilled for cotter pins. Use stainless steel cotter pins. The cotter pin should fit neatly into the hole, with very little sideplay. The following general rules apply to cotter pin safetying:

- Do not bend the prong over the bolt end beyond the bolt diameter. (Cut it off if necessary.)
- Do not bend the prong down against the surface of the washer. (Again, cut it off if necessary.)
- Do not extend the prongs outward from the sides of the nut if you use the optional wraparound method.
- Bend all prongs over a reasonable radius. Sharp angled bends invite breakage. Tap the prongs lightly with a mallet to bend them.

Q5-11. What is the purpose of safetying aircraft hardware?

Q5-12. What is the most common method of safety wiring?

Q5-13. What are the two methods of safetying turnbuckles used by the military services?

Q5-14. What type of cotter pin should you use when nonmagnetic material is required?

WASHERS

LEARNING OBJECTIVE: Recognize the two primary functions of washers as used in aircraft/engine construction.

Washers used in aircraft structures may be grouped into three general classes—plain, lock washers, and

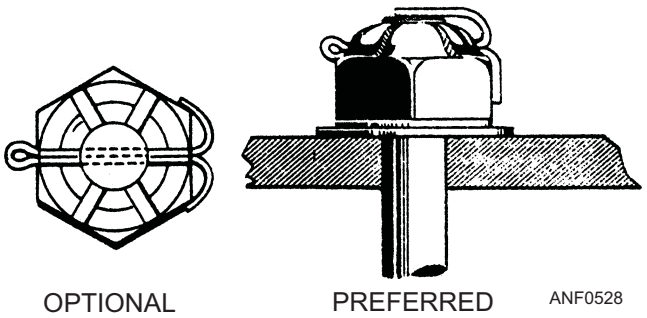

Figure 5-28.—Cotter pin installations.

special washers. Figure 5-29 shows some of the most commonly used types.

PLAIN WASHERS

Plain washers are widely used under AN hex nuts to provide a smooth bearing surface. They act as a shim in obtaining the correct relationship between the threads of a bolt and the nut. They also aid in adjusting the position of castellated nuts with respect to drilled cotter pin holes in bolts. Plain washers are also used under lock washers to prevent damage to surfaces of soft material.

LOCK WASHERS

Lock washers are used whenever the self-locking or castellated type nut is not used. Sufficient friction is provided by the spring action of the washer to prevent loosening of the nut because of vibration. Lock washers must not be used as part of a fastener for primary or secondary structures.

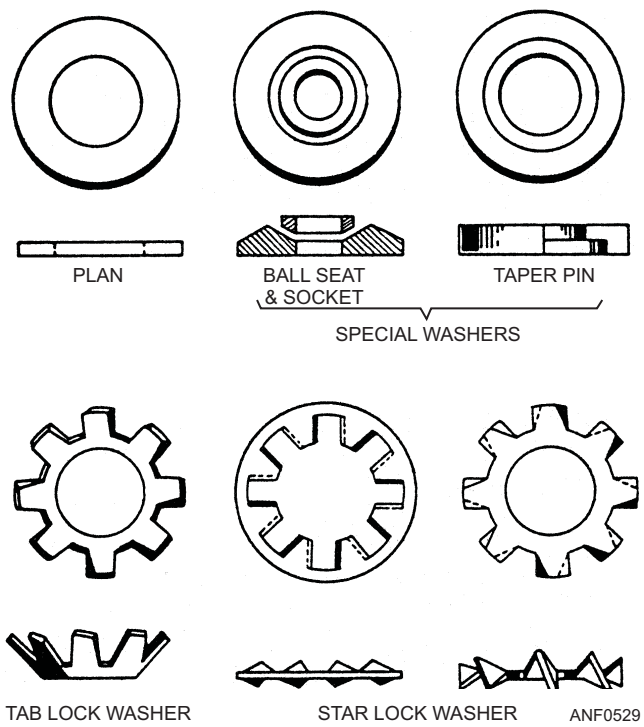

Figure 5-29.—Various types of washers.

Star Lock Washers

The star lock or shakeproof washer is a round washer made of hardened and tempered carbon steel, stainless steel, or Monel. This washer can have either internal or external teeth. Each tooth is twisted, one edge up and one edge down. The top edge bites into the nut or bolt and the bottom edge bites into the working surface. It depends on spring action for its locking feature. This washer can be used only once because the teeth become somewhat compressed after being used.

Tab Lock Washers

Tab lock washers are round washers designed with tabs or lips that are bent across the sides of a hex nut or bolt to lock the nut in place. There are various methods of securing the tab lock washer to prevent it from turning, such as an external tab bent downward 90 degrees into a small hole in the face of the unit, an external tab that fits a keyed bolt, or two or more tab lock washers connected by a bar. Tab lock washers can withstand higher heat than other methods of safetying, and can be used safely under high vibration conditions. Tab lock washers should be used only once because the tab tends to crystallize when bent a second time.

SPECIAL WASHERS

Special washers such as ball seat and socket washers and taper pin washers are designed for special applications.

Q5-15. Washers used in aircraft structures are grouped into what three general classes?

SUMMARY

In this chapter you have been introduced to the various types of aircraft hardware used in naval aircraft and the procedures for maintaining their security. It is essential that the correct hardware be used at all times for the safe and efficient operation of naval aircraft.

ASSIGNMENT 5

Textbook Assignment: "Aircraft Hardware," chapter 5, pages 5-1 through 5-20.

5-1. Rivets and threaded fasteners are identified by which of the following prefixes?

1. AN
2. MS
3. NAS
4. All of the above

5-2. For procurement of aircraft hardware from supply, the specification number and factory part number are converted to what numbers?

1. Standard numbers
2. Air Force-Navy numbers
3. Stock numbers
4. Cross-reference numbers

5-3. Most aircraft bolts are of what type series thread?

1. American National Aircraft Standard (NS)
2. National coarse (NC)
3. National fine (NF)
4. National good (NG)

5-4. What is the grip of a bolt?

1. The shank area
2. The threaded area
3. The unthreaded part of the bolt shaft
4. The area from the top of the bolt head to the bottom of the threads

5-5. If an aircraft bolt becomes unserviceable, you must consider which of the following bolt dimensions for its replacement?

1. Length
2. Diameter
3. Head thickness and width
4. Each of the above

5-6. What relation should the grip length have to the materials being bolted together?

1. It should be less than the diameter of the bolt
2. It should be less than the thickness of the bolted materials
3. It should be equal to the thickness of the bolted materials
4. It should be greater than the thickness of the bolted materials

5-7. AN bolts come in what total number of head styles?

1. Five
2. Two
3. Three
4. Four

5-8. What head style is common to AN, NAS, and MS aircraft bolts?

1. Countersunk
2. Hex head
3. Internal wrenching
4. Clevis

5-9. What marking or bolt dimension indicates the material of which standard bolts are made, and if it is a close-tolerance bolt?

1. Bolt diameter
2. Bolt length
3. Head marking
4. Grip length marking

5-10. What are the main types of screws?

1. Machine, structural, and self-tapping
2. Structural, self-tapping, and fillister head
3. Reed and Prince, Phillips, and common
4. Brazier head, round head, and common

5-11. What type of screw is used to assemble structural parts?

1. Machine
2. Structural
3. Self-tapping
4. Fillister head

5-12. What material is used to make structural screws?

1. Aluminum alloy
2. Corrosion resistant steel
3. Alloy steel
4. Low-carbon steel

5-13. What type of screw is normally used to attach nameplates to castings?

1. Sheet metal self-tapping
2. Machine self-tapping
3. Standard
4. General purpose

5-14. Which, if any, of the following fasteners may be replaced by self-tapping screws?

1. Standard screws
2. Standard nuts
3. Standard bolts
4. None of the above

5-15. Which of the following screws are used to hold gears on a shaft?

1. Structural screws
2. Machine screws
3. Self-tapping screws
4. Setscrews

5-16. What nonself-locking nut is used with a drilled-shank AN hex head bolt?

1. Castellated shear nut
2. Castle nut
3. Plain nut
4. Wing nut

5-17. Plain hex nuts are NOT used to a great extent on aircraft structures for which of the following reasons?

1. They require auxiliary safety locking devices
2. They cannot withstand very large tensional loads
3. They are not designed to accommodate cotter pins or safety wire

5-18. What type of nut is commonly used on battery connections?

1. Wing nut
2. Plain nut
3. Castle nut
4. Castellated shear nut

5-19. Which of the following nuts, when used to provide a tight connection, will not loosen under vibration?

1. Self-locking nuts
2. Castellated shear nuts
3. Wingnuts
4. Plain checknuts

5-20. What are the two general types of self-locking nuts?

1. Boots and Flexloc
2. Elastic stop and nonelastic stop
3. All-metal and nonmetallic insert
4. Flexloc and nonmetallic insert

5-21. Which of the following is a nonmetallic type of self-locking nut?

1. Elastic stop
2. Camloc
3. Flexloc
4. Boots

5-22. Access panels are usually secured to the aircraft by what type of screws or fasteners?

1. Machine screws
2. Structural screws
3. Self-tapping fasteners
4. Turnlock fasteners

5-23. Which of the following common fasteners is referred to as a Turnlock fastener?

1. Dzus
2. Camloc
3. Airloc
4. Each of the above

5-24. Which of the following parts of a Camloc fastener are secured to the access door?

1. Stud and grommet only
2. Stud and receptacle only
3. Grommet and receptacle only
4. Stud, grommet, and receptacle

5-25. What is the difference between Camloc high-stress panel fasteners and screws?

1. The deep No. 2 Phillips recess in the stud head
2. The bushing in which the stud is installed
3. Both 1 and 2 above
4. The deep Reed and Prince recess in the stud head

5-26. To remove an Airloc stud from a panel, you should take what action?

1. Remove the cross pin
2. Remove the grommet
3. Remove the snap ring
4. Saw it into two pieces

5-27. Which of the following is a component of a heavy duty Dzus fastener but not of a light duty one?

1. Stud
2. Spring
3. Grommet
4. Receptacle

5-28. Which of the following major types of rivets are used in aircraft construction?

1. Standard and Special
2. Special and Blind
3. Roundhead and Special
4. Blind and Solid

5-29. Which of the following rivets is used where streamlining is important?

1. Universal head
2. Round head
3. Flat head
4. Countersunk head

5-30. Blind rivets are so named for what reason?

1. Limited space does not allow for a bucking bar
2. They are self-heading
3. They are lighter than solid shank rivets
4. They retain the stem in position by friction

5-31. What are two head styles for Rivnuts?

1. Flathead and countersunk
2. Brazier and countersunk
3. Flathead and universal
4. Countersunk and universal

5-32. Which of the following types of Rivnuts is used on sealed flotation or pressurized compartments?

1. Open-end
2. Closed-end
3. Externally threaded
4. Groove shanked

5-33. A snap ring is a ring of metal with spring-like action that can be reused as long as it retains its shape.

1. True
2. False

5-34. What is the purpose of the right- and left-hand threads in a turnbuckle barrel?

1. To obtain correct cable tension and to make minor changes in cable length
2. To obtain correct cable tension and to locate the barrel accurately along the cable length
3. To make minor changes in cable tension and to locate the barrel accurately along the cable length
4. To ensure that one terminal is payed out and the other payed in at the same rate

5-35. A flat head pin used in a tie-rod terminal should be secured with what device?

1. Safety wire
2. A cotter pin
3. A self-locking nut
4. A sheet spring nut

5-36. When you are installing a hose between two duct sections, what is the maximum allowable distance between the duct ends?

1. 1/2 inch
2. 5/8 inch
3. 3/4 inch
4. 13/16 inch

5-37. If the correct torque value is not specified on the clamp, which of the following publications should you consult?

1. NATOPS manual
2. IPB
3. Maintenance instructions manual
4. General structural repair manual

5-38. What type of wire is used for electrical installations in aircraft maintenance?

1. Twisted
2. Multiconductor
3. Braided
4. Stranded conductor

5-39. What type of cable has two or more insulated conductors in the same jacket?

1. RF cable
2. Shielded cable
3. Twisted cable
4. Multiconductor cable

5-40. What type of cable has two or more insulated conductors twisted together?

1. RF cable
2. Shielded cable
3. Twisted cable
4. Multiconductor cable

5-41. What type of cable has a single insulated conductor with a metallic braided outer conductor?

1. RF cable
2. Shielded cable
3. Twisted cable
4. Multiconductor cable

5-42. The part of a connector that is usually mounted on a part of the equipment is known as what unit?

1. Plug
2. Terminal
3. Coupling nut
4. Receptacle

5-43. Aircraft wires are fastened to studs by what means?

1. Wrapping
2. Terminal lugs
3. Bonding
4. Twisting

5-44. What does the term "safetying" mean?

1. Permanently locking all aircraft nuts and bolts
2. Checking the aircraft for structural weaknesses
3. Securing aircraft fasteners so they will not work loose
4. Thoroughly inspecting all aircraft fasteners

5-45. What is the most common method of safety wiring?

1. The single-wire, double-twist method
2. The single-twist method
3. The clip-locking method
4. The wire-wrapping method

5-46. What safety wiring method should be used in places that are hard to reach?

1. The single-wire method
2. The double-wire method
3. The clip-locking method
4. The wire-wrapping method

IN ANSWERING QUESTIONS 5-47 THROUGH 5-50, REFER TO FIGURE 5-23 IN THE TEXT.

5-47. What examples in the figure show a single-threaded part wired to a housing or lug?

1. 1 and 2
2. 2 and 3
3. 4 and 5
4. 6 and 7

5-48. What example in the figure shows the correct way to wire several parts in series?

1. 1
2. 2
3. 3
4. 4

5-49. What example in the figure shows the proper way to wire castellated nuts and studs?

1. 1
2. 2
3. 3
4. 4

5-50. What example in the figure shows the proper way to safety wire parts in a closely spaced, closed geometrical pattern with the single-wire method?

1. 8
2. 7
3. 6
4. 5

5-51. When six widely spaced bolts are being safety wired by the double-twist method, what procedure should you follow?

1. A group of three should be the maximum number safety wired in one series
2. All six should be safety wired in one series
3. They should be safety wired individually
4. The number that can be safety wired by a 24-inch length of wire should be the maximum number in a series

5-52. When safety wiring closely spaced bolts, what is the longest wire you can use to safety wire the most bolts in a series?

1. 30 inch
2. 24 inch
3. 18 inch
4. 12 inch

5-53. What method is used to safety wire turnbuckles on modern aircraft?

1. Single-wire method
2. Clip-locking method
3. Double-twist method
4. Wire-wrapping method

5-54. What method is used to safety wire turnbuckles on older types of aircraft?

1. Clip-locking method
2. Single-wire method
3. Double-twist method
4. Wire-wrapping method

5-55. What total number of twists should be in a pigtail that is one-half-inch long?

1. Six to eight
2. Five to seven
3. Three to six
4. Four to five

5-56. Safety wire is installed properly if you observe which of the following actions?

1. The tension of the wire tends to tighten the bolt or nut
2. The tension of the wire tends to loosen the bolt or nut
3. The wire is as tight as possible
4. The wire has 5 turns per inch

5-57. What are the general classes of washers used in aircraft structures?

1. Plain, complex, and special
2. Plain, lock washer, and special
3. Castellated, castle, and plain
4. Castellated, lock, and plain

5-58. Lock washers are used with what type of nuts?

1. Castle
2. Plain hex
3. Elastic stop
4. Castellated shear

5-59. A star washer may be used what total number of times?

1. One
2. Two
3. Three
4. Four

5-60. What safetying device should be selected if it will be subjected to extreme heat and high vibration?

1. Cotter pins
2. Snap rings
3. Tab lock washers
4. Safety wire

5-61. Tab washers may be used what total number of times?

1. One
2. Two
3. Three
4. Four

5-62. What type of washers are widely used under AN hex nuts to provide a smooth bearing surface?

1. Special washers
2. Star lock washers
3. Plain washers
4. Tab lock washers

5-63. What class of washer is used under lock washers to prevent damage to surfaces of soft material?

1. Special
2. Castle
3. Complex
4. Plain

CHAPTER 6

AIRCRAFT POWER PLANTS

INTRODUCTION

All naval aircraft are engine driven. The early engines were all reciprocating engines. Today, almost all are jet propulsion engines. Therefore, this chapter covers only jet propulsion engines.

The jet propulsion principle is the basic concept for the gas turbine engine. This principle is not a new concept. Sea creatures use jet propulsion to propel themselves through the water. The Egyptians built the first reaction engine around 250 BC. Between 1700 and 1930, technical achievements in engineering, manufacturing, and metallurgy made the reaction principle applicable to the development of the gas turbine engine for jet propulsion. In 1939, the Germans flew the first aircraft powered by a gas turbine engine, followed by the British in 1941, and the Americans in 1942. During World War II, Germany was the only nation to fly a gas turbine-propelled aircraft in actual combat.

There are four types of jet propulsion engines: the rocket, the ramjet, the pulsejet, and the gas turbine engine. Of these, the gas turbine engine powers almost all naval aircraft. There are four types of gas turbine engines: the turbojet, the turbofan, the turboprop, and the turboshaft. The turbojet and turbofan engines use thrust directly. The turboprop and turboshaft engines use thrust to deliver torque (turning power) to an airplane propeller or a helicopter rotor. Regardless of the type, the purpose of an engine is to develop thrust. This chapter will give you basic information on jet propulsion engines.

JET PROPULSION ENGINES

LEARNING OBJECTIVE: Recognize the basic operating principles for the four types of jet propulsion engines, and identify the components and functions of each type of engine.

A jet propulsion engine projects a column of air to the rear at extremely high speeds. The resulting thrust pushes the aircraft in the opposite (or forward) direction. Jet propulsion engines are grouped into four main types:

1. Rocket. These are jet propulsion systems that do not use atmospheric air.
2. Ramjet. The ramjet operates as a continuous thermal duct or athodyd.
3. Pulsejet. The pulsejet operates as an intermittent impulse duct.
4. Gas turbine. The gas turbine engine operates as a continuous turbine-compressor unit.

ROCKET ENGINES

The rocket uses a form of jet propulsion that differs in basic ways from thermal gas turbine systems. The rocket does not draw air from the outside to fuel the combustion process. It carries with it both the fuel and the oxidizer for combustion. This is a disadvantage for atmospheric flight, but it is the only way at present to fuel flight outside the earth's atmosphere. The rocket is a true jet reaction unit. A brief examination of its functions clarifies the reaction principle by which all thermal jet units operate.

If you burn a hydrocarbon (compound containing only hydrogen and carbon) in a closed container (fig. 6-1), the heat of the burning fuel is released, causing the trapped gases to expand rapidly. Because the container has a closed volume, the temperature and pressure rises and is uniformly distributed (balanced) in all directions. Since the force of the rising pressure cannot be released and is balanced, the container does not move.

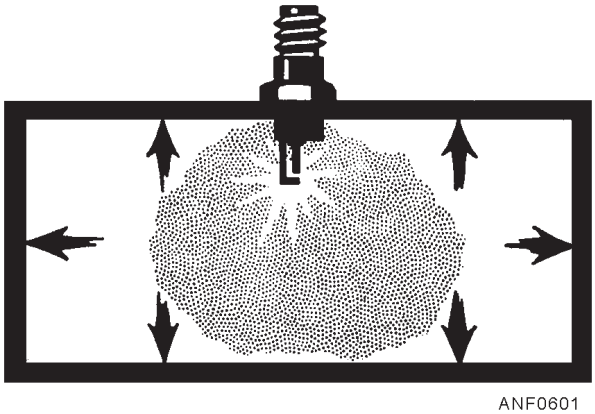

Figure 6-1.—Combustion in a closed container.

When you burn fuel in a container that has an opening (or nozzle) at one end, expanding gases rush out of the nozzle at a high velocity, as shown in figure 6-2. Releasing internal pressure at the nozzle end of the container leaves an unbalanced pressure at the other end. **The released pressure moves the container in the direction opposite to that of the escaping gases. This is the basic operating principle for all jet engines**. Obviously, propulsion depends solely on internal conditions. The container does not "push against" external air. In fact, a complete vacuum would produce even greater force.

The jet propulsion engine operates like a toy balloon. Newton's third law of motion explains this operation. This law states "for every acting force there is an equal and opposite reacting force." Inflate a balloon. The air pressure inside the balloon, which is stretching the skin, is greater than the pressure outside the balloon. If the stem is tied closed, the inside air pushes in all directions and the balloon will not move. Place the balloon in a vacuum and release the stem. The escaping air has nothing to push against, but the balloon will move in a direction away from the stem, just as it does in a normal atmosphere.

Releasing the stem removes a section of skin on the side of the balloon against which the air has been pushing. On the side directly opposite the stem, however, the air continues to push on an equal area of skin. The continued push of air on this area causes the balloon to move in the direction away from the stem.

The *acting force* that Newton's third law refers to is the acceleration of the escaping air from the rear of the balloon. The reaction to this acceleration is a force in the opposite direction. In addition, the amount of force acting on the balloon is the product of the mass of air being accelerated times the acceleration of that air. Since the forces always occur in pairs, we can say that if a certain force is needed to accelerate a mass rearward, the reaction to this force is thrust in the opposite direction (force = thrust, as shown in figure 6-3).

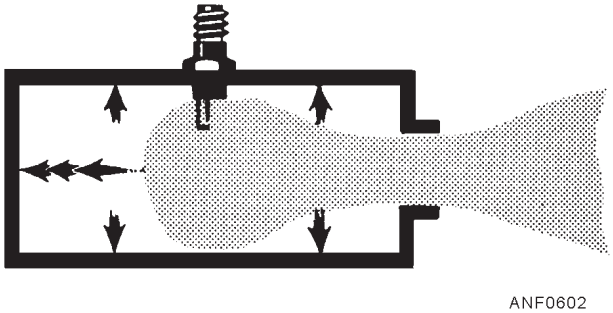

Figure 6-2.—Principle of jet propulsion.

RAMJET ENGINES

The ramjet is often described as a flying stovepipe. It is the simplest of all power plants that use atmospheric air to support combustion.

A ramjet is an appropriately shaped duct, tapered at both ends, in which fuel is injected and burned at a constant pressure, as shown in figure 6-4. Except for the possibility of fuel pumps or other accessories, there are no moving parts.

The air inlet diffuser of the ramjet engine is designed to convert the velocity energy of the entering air into static pressure. This is commonly known as *ram*. During the inlet process, fuel is injected into the airstream, where it is well mixed with the air so that it will burn readily. At about the point of highest pressure in the engine, combustion is initiated and the fuel-air mixture is burned. The gases of combustion and the heated air expand, thus air is ejected from the exit nozzle at a much higher velocity than it had when it entered the engine. This change in the velocity of the entering and departing air results in the thrust.

PULSEJET ENGINES

The pulsejet engine is a member of the athodyd (aero-thermodynamic-duct) family, since it does not have a compressor or a turbine.

The pulsejet engine differs from the ramjet in that the inlet duct is sealed with a disc that incorporates flapper valves. The purpose of the flapper valves is to provide the required air intake system, seal the high-pressure gases in the combustion chamber, and prevent their escape out the inlet duct during the combustion cycle. A pulsejet engine consists essentially of a diffuser, an air valve bank (automatic or

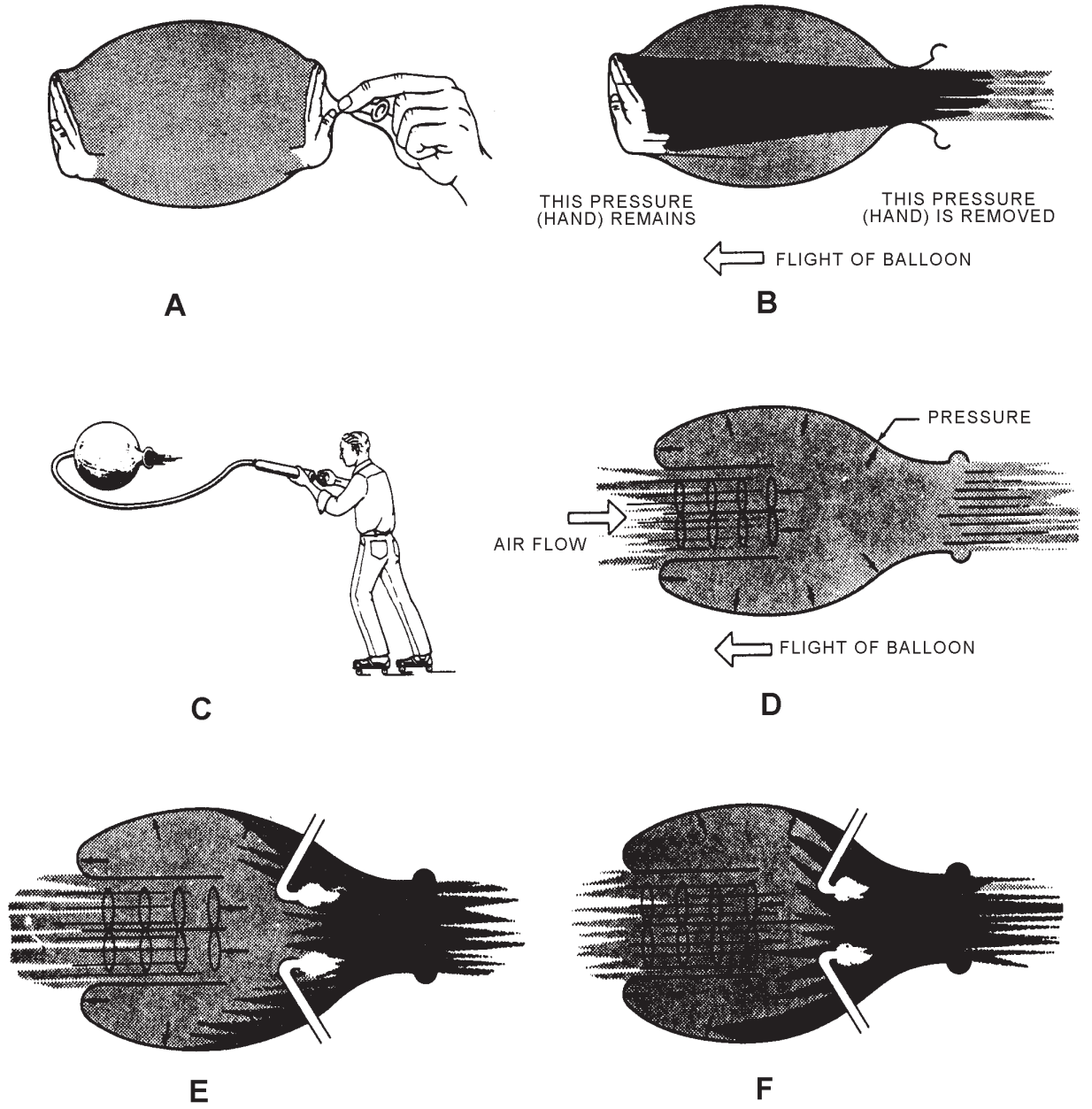

A. PRESSURES ARE EQUAL IN ALL DIRECTIONS.

B. AN UNBALANCE OF FORCE IS CREATED WHEN THE STEM IS OPENED.

C. MAINTAINING PRESSURE IN THE BALLOON.

D. REPLACING THE HAND PUMP WITH A COMPRESSOR

E. RAISING THE AIR TEMPERATURE AND INCREASING THE VOLUME

F. THE TURBINE EXTRACTS SOME OF THE ENERGY IN THE AIR TO TURN THE COMPRESSOR.

ANF0603

Figure 6-3.—Balloon as a jet engine.

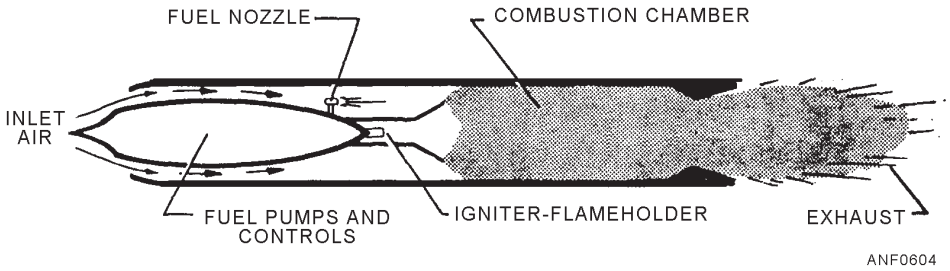

Figure 6-4.—The ramjet engine.

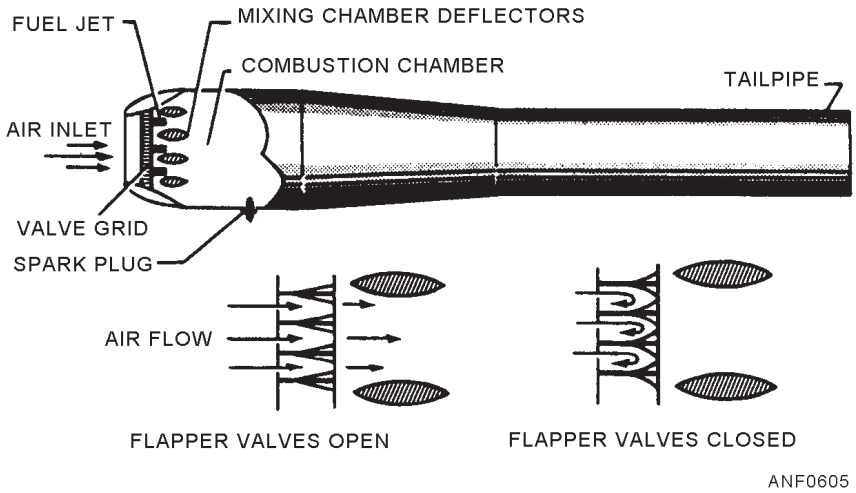

Figure 6-5.—The pulsejet engine.

mechanical), a combustion chamber, and a tailpipe or exit nozzle, as shown in figure 6-5.

While the ramjet will deliver no static thrust, the pulsejet engine can produce static thrust. However, the thrust developed under static conditions is not sufficient to enable a pulsejet aircraft or guided missile to take off under its own power, at least not on conventional runways. Consequently, missiles or other devices powered by pulsejet engines must be boosted to self-sustaining flight speeds by catapults or rockets.

Possible applications for the pulsejet engine, other than for powering pilotless military weapons, include flight research, powering helicopters by attaching small pulsejet engines to the rotor blade tips, and emergency power plants for small aircraft and gliders.

GAS TURBINE ENGINES

As stated earlier, there are four types of gas turbine engines: turbojet, turboprop, turboshaft, and turbofan. Each of these engines is briefly discussed in the following paragraphs.

Turbojet Engines

There are over 40 different Navy models of the turbojet engine. The A-6 and T-2 are examples of aircraft that use this direct thrust engine. The turbojet engine consists of five major components: an inlet duct, a compressor, a combustion chamber (or chambers), a turbine (or turbines), and an exhaust cone assembly, as shown in figure 6-6.

INLET DUCT.—The inlet duct is an opening in the front of the aircraft that allows outside (ambient) air to enter the engine. The compressor compresses the incoming air and delivers it to the combustion (or burner) section. In the combustion chamber, fuel is sprayed into and mixed with the compressed air. An igniter then ignites the fuel-air mixture. The burning mixture continues to burn in the presence of the proper fuel-air mixture. The fuel-air mixture burns at a relatively constant pressure. Only about 25 percent of the air is used in the combustion process. The rest of the air (75 percent) is mixed with the combustion products (exhaust) for cooling before the gases enter the turbine section.

The turbine section extracts and uses a major portion of the energy in the gas stream to turn the compressor and accessories. After leaving the turbine, the remaining pressure forces the hot gases through the engine exhaust duct at very high speeds. The air that

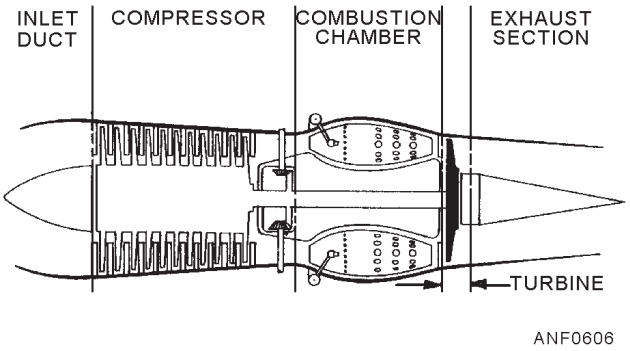

Figure 6-6.—Five major components of the turbojet.

entered the inlet is now expelled at a much higher speed than when it entered. This causes the engine thrust.

COMPRESSOR.—The axial-flow compressor is made up of a series of rotating blades and a row of stationary stator vanes, as shown in figure 6-7. A row of rotating blades and stator vanes is called a stage. The entire compressor is made up of a series of alternating rotor blade and stator vane stages.

You recall that the compressor provides high-pressure air to the combustion chamber (or chambers). The compressor delivers outside air (ambient) to the inlet section and passes this air through the inlet guide vanes. In turn, the inlet guide vanes deflect the air in the direction of compressor rotation. The rotating blades arrest the airflow and pass it to a set of stationary stator vanes. The air is again deflected and picked up by another set of rotating blades, and so on through the compressor. The pressure of the air increases each time it passes through a set of rotors and stators because the areas of the rotors and stators get smaller, as shown in figure 6-8.

One development in the axial-flow engine is the *split spool* compressor. This compressor (fig. 6-9) uses two rotors of nine and seven stages, respectively. An assigned wheel drives each rotor of the axial three-stage turbine assembly. This configuration makes possible high compressor pressure ratios, which are necessary for efficient high-altitude operations.

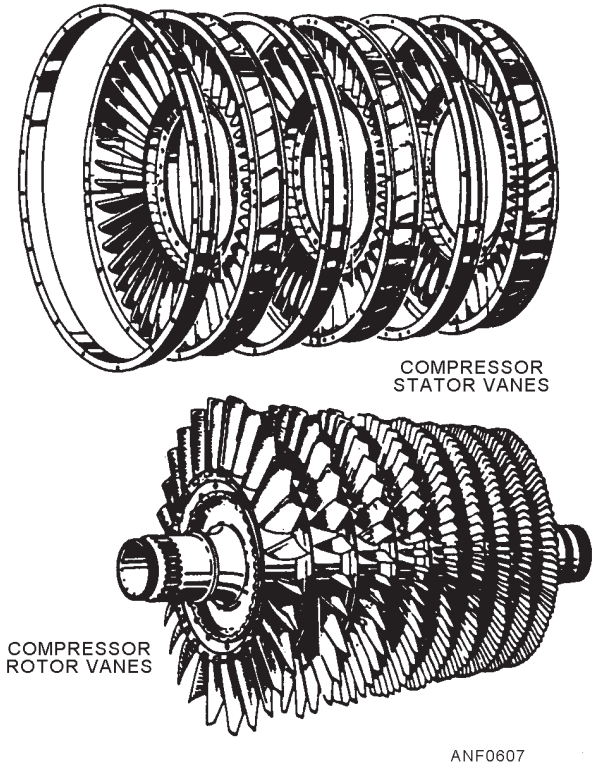

Figure 6-7.—Stator and rotor components of an axial-flow compressor.

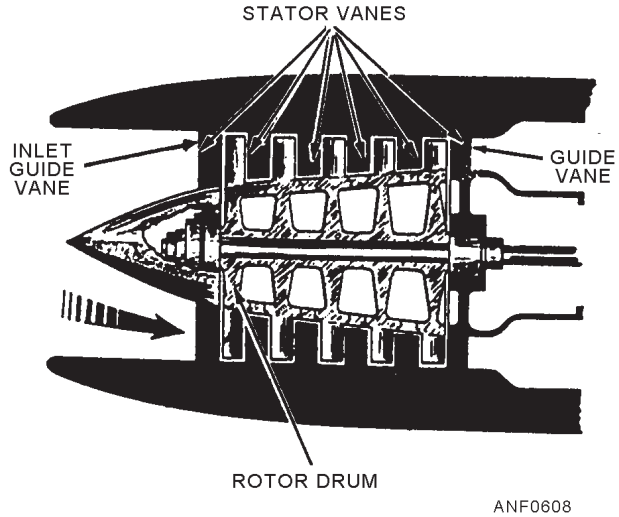

Figure 6-8.—Five-stage compressor.

Another development was necessary to eliminate compressor stall in turbojet engines. The axial compressor, especially with fixed blading, was subject to stalling. Compressor stall was normally caused by a breakdown of the airflow through a few stages of the compressor. Compressor stall could progress until the complete unit stalled.

There are two methods to eliminate compressor stall. The compressor bleed-air system and the variable vane system. The compressor bleed-air system bleeds off approximately 10 percent of the front compressor discharge air. It reduces the amount of air available to the rear compressor. This provides a surge-free operation throughout the critical speeds of the engine. The variable vane system changes the position of the inlet guide vanes and the stator vanes to avoid compressor stall. This action maintains the velocity of the air (and the angle at which it strikes the blades) within acceptable limits for low airflow conditions. It also permits high airflow with a minimum of restriction.

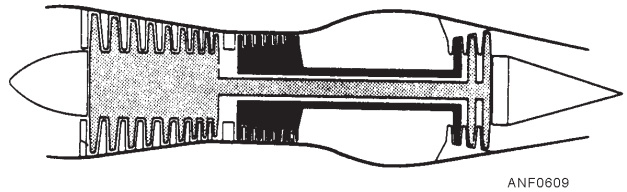

Figure 6-9.—Dual rotor turbine for split spool compressor.

COMBUSTION CHAMBER.—The efficiency and performance of a turbine power unit depend on the type of combustion system used. The basic requirements for a satisfactory system are a high rate of burning, minimum pressure drop, small bulk, and light weight. The system must be consistent in operation over a wide range of loads and altitudes, with no tendency to flood with fuel or suffer *combustion blowout*. Combustion blowout is a flame failure, and it is primarily a problem in high-altitude operation. Starting must be easy and positive, both on the ground and in the air. Combustion must be complete to avoid formation of carbon deposits.

Fuel enters the front of the burner as an atomized spray or in a prevaporized form. Air flows in around the fuel nozzle and through the first row of combustion air holes in the liner. Air near the burner nozzle stays close to the front liner wall for cooling and cleaning purposes. Air entering through opposing liner holes mixes rapidly with the fuel to form a combustible mixture. Air entering the forward section of the liner recirculates and moves upstream against the fuel spray. During combustion, this action permits rapid mixing and prevents flame blowout by forming a low-velocity stabilization zone. This zone acts as a continuous pilot for the rest of the burner. Air entering the downstream part of the liner provides the correct mixture for combustion. This air also creates the intense turbulence necessary for mixing the fuel and air and for transferring energy from the burned to the unburned gases.

Since an engine usually has two igniter plugs, cross ignition tubes are necessary in the can and can-annular types of burners. These tubes allow burning to start in the other cans or inner liners. Axial-flow engines use either an annular or the can-annular (fig. 6-10) type of combustion chamber. The igniter plug is usually located in the upstream reverse flow region of the burner. After ignition, the flame quickly spreads to the primary (combustion) zone. This zone contains the correct proportion of air to completely burn the fuel. If all the air flowing through the engine were mixed with the fuel at this point, the mixture would be outside the combustion limits for the fuel normally used. Therefore, only about one-third to one-half of the air is allowed to enter the combustion zone of the burner. About 25 percent of the air actually takes part in the combustion process.

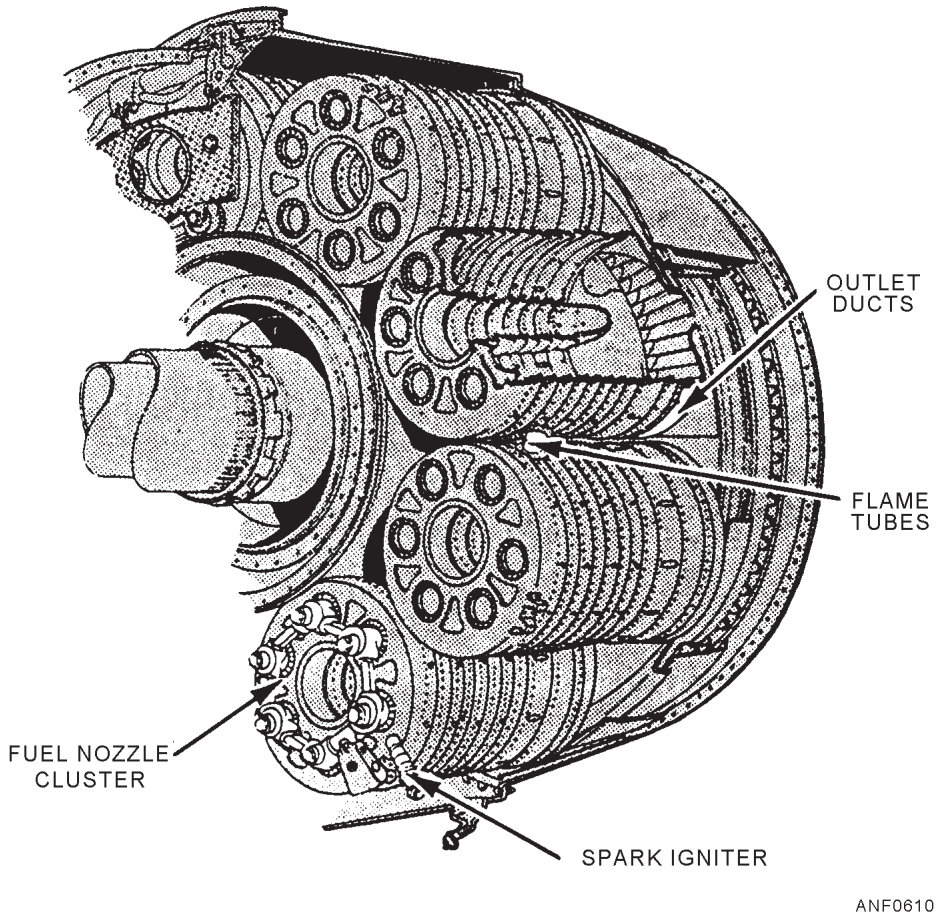

Figure 6-10.—Can-annular combustion chamber components and arrangements.

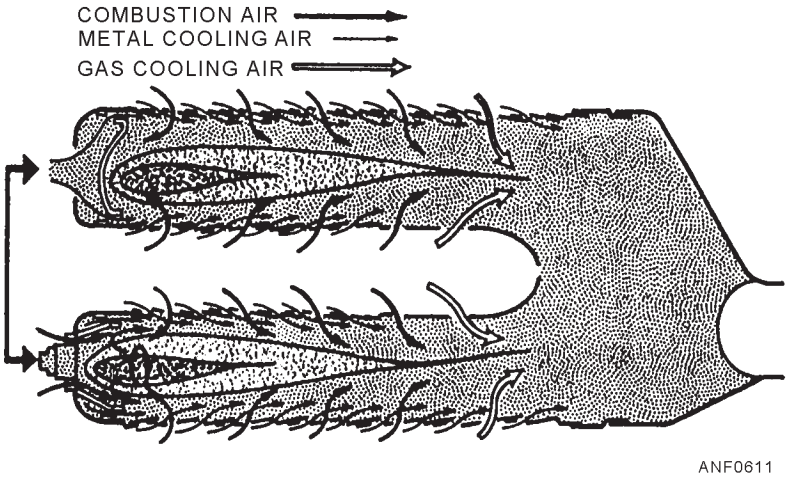

Figure 6-11.—Airflow through a can-annular chamber.

Gases that result from the combustion process have temperatures of approximately 3,500˚F (1,900˚C). Before entering the turbine, these gases must be cooled to about half this value. The design of the turbine and the materials used in its makeup determine the temperature to which the gases must be cooled. Secondary air, which enters through a set of relatively large holes located toward the rear of the liner, dilutes and cools the hot gases. The liner must also be protected from the high temperatures of combustion. This is usually done by cool air introduced at several different places along the liner. The cool air forms an insulating blanket between the hot gases and the metal walls, as shown in figure 6-11.

TURBINE.—The turbine assembly drives the compressor and accessories by extracting some of the energy and pressure from the combustion gases. In a typical jet engine, about 75 percent of the power produced internally is used to drive the compressor. The remaining 25 percent produces the necessary thrust.

The turbine consists of a nozzle assembly and a rotating blade assembly. The hot gases from the combustion chamber flow through the turbine nozzle assembly and are directed against the rotating turbine disk blades. The rotating blade assembly (turbine rotor) is made up of a steel shaft and disk. High-temperature alloy blades are locked into grooves cut in the periphery of the disk. The entire turbine rotor is statically and dynamically balanced. In some units, the turbine compressor rotors are mounted on the same shaft. In other units they are mounted on separate shafts that are connected during assembly.

The nozzle assembly consists of the nozzle guide vanes and the stator ring/shroud ring, as shown in figure 6-12. The guide vanes are made up of high-temperature alloy. They are fitted into or welded to the stator ring/shroud.

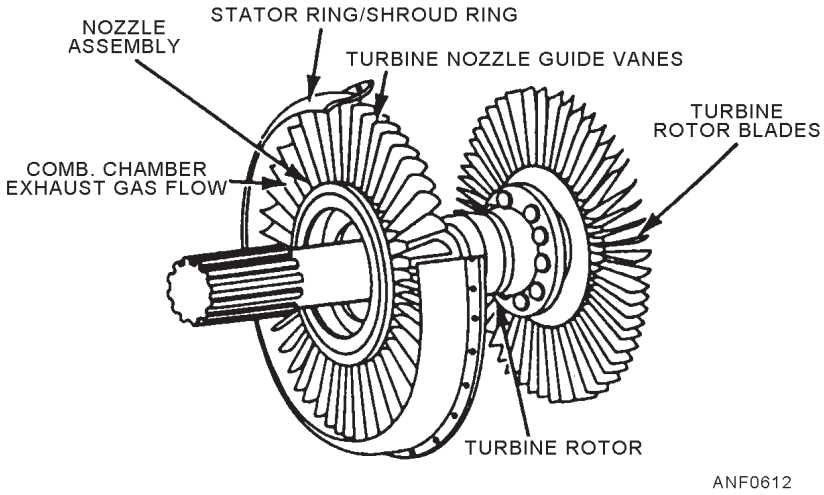

Figure 6-12.—Turbine rotor and nozzle.

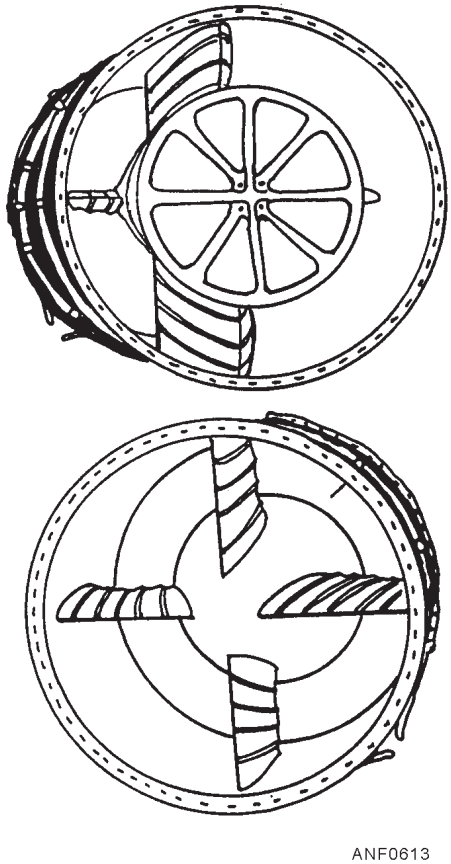

Figure 6-13.—Typical exhaust cone assembly.

EXHAUST CONE ASSEMBLY.—The exhaust cone (fig. 6-13), attached to the rear of the turbine assembly, is a tapered, cylinder-shaped outlet for the gases. The cone eliminates turbulence in the emerging jet, thereby giving maximum velocity.

The inner cone is usually attached to the outer cone by streamlined vanes called brace assemblies. The exhaust cone itself is usually made of stainless steel sheets, reinforced at each end with stainless steel flanges. As much heat energy as possible is kept within the exhaust cone. A covering of layers of aluminum foil or other material acts as insulation for the cone.

Turboprop Engines

There are numerous models of the turboprop engine. The P-3 and E-2 aircraft are examples of aircraft that use turboprop engines.

The turboprop engine was developed to provide the power requirements for aircraft of greater size, carrying capacity, range, and speed. The turboprop engine is capable of developing 2 1/2 horsepower per pound of weight.

The turboprop converts most of its gas-energy into mechanical power to drive the compressor, accessories, and a propeller. The additional turbine stages needed to drive the extra load of a propeller create the low-pressure, low-velocity gas stream. A small amount of jet thrust is obtained from this gas stream.

The turboprop engine (fig. 6-14) consists of three major assemblies: the power section, the torquemeter assembly, and the reduction gear assembly. The propeller assembly mounts on the reduction gear assembly to provide aircraft thrust.

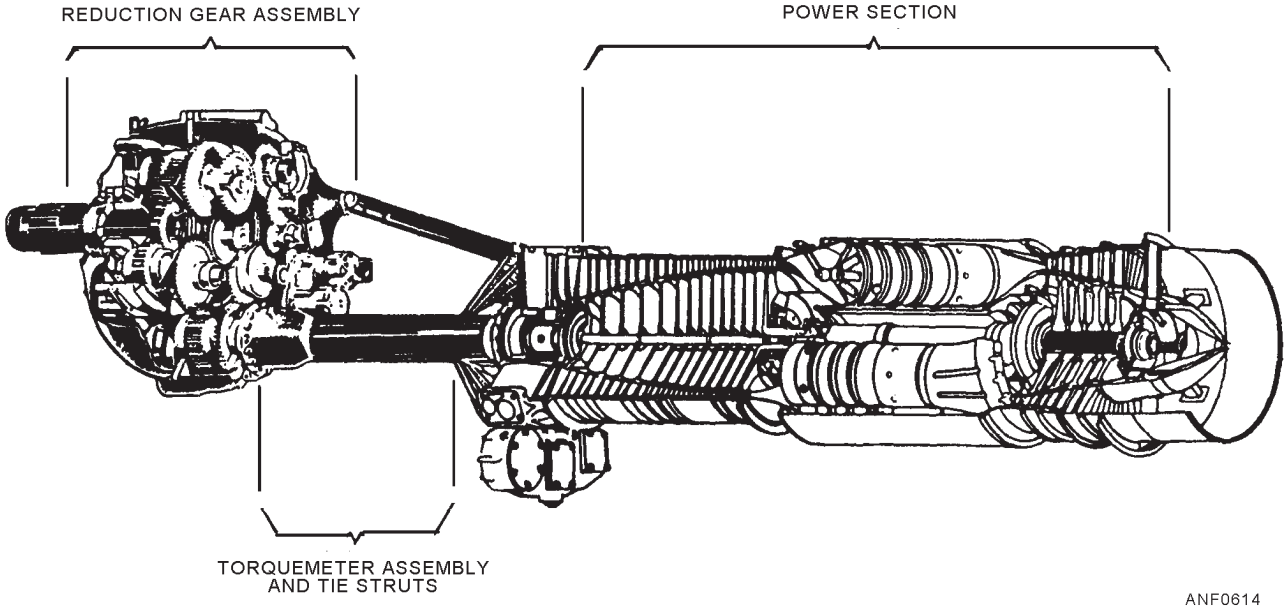

Figure 6-14.—T56 turboprop engine.

POWER SECTION.—The power section consists of an axial-flow compressor, a combustion chamber, a multi-stage turbine, and an exhaust section. The last two stages of the turbine are used to drive the propeller using the torquemeter assembly and the reduction gear assembly.

TORQUEMETER ASSEMBLY.—The torquemeter assembly electronically measures the torsional deflection (twist). Torsional deflection occurs in the power transmitting shaft that connects the power section to the reduction gear assembly. This torsional deflection is recorded as horsepower.

REDUCTION GEAR ASSEMBLY.—The reduction gear assembly reduces the engine rpm within the range of efficient propeller rpm. The ratio on some installations is as high as 12 or 13 to 1. This large reduction ratio is necessary because the gas turbine must operate at a very high rpm to produce power efficiently. This engine operates at a constant rpm. The propeller blade angle changes for an increase or decrease in power while the engine rpm remains the same.

The typical propeller assembly for a turboprop engine (fig. 6-15) consists of a front and rear spinner assembly, a hub-mounted bulkhead assembly, the dome assembly, four blades, an afterbody fairing assembly, and a propeller control assembly. The propeller assembly converts the power developed by the engine into thrust as efficiently as possible under all operating conditions.

Turboshaft Engines

There are many different models of this type of engine. The H-46 and H-53 helicopters are examples of aircraft that use this engine.

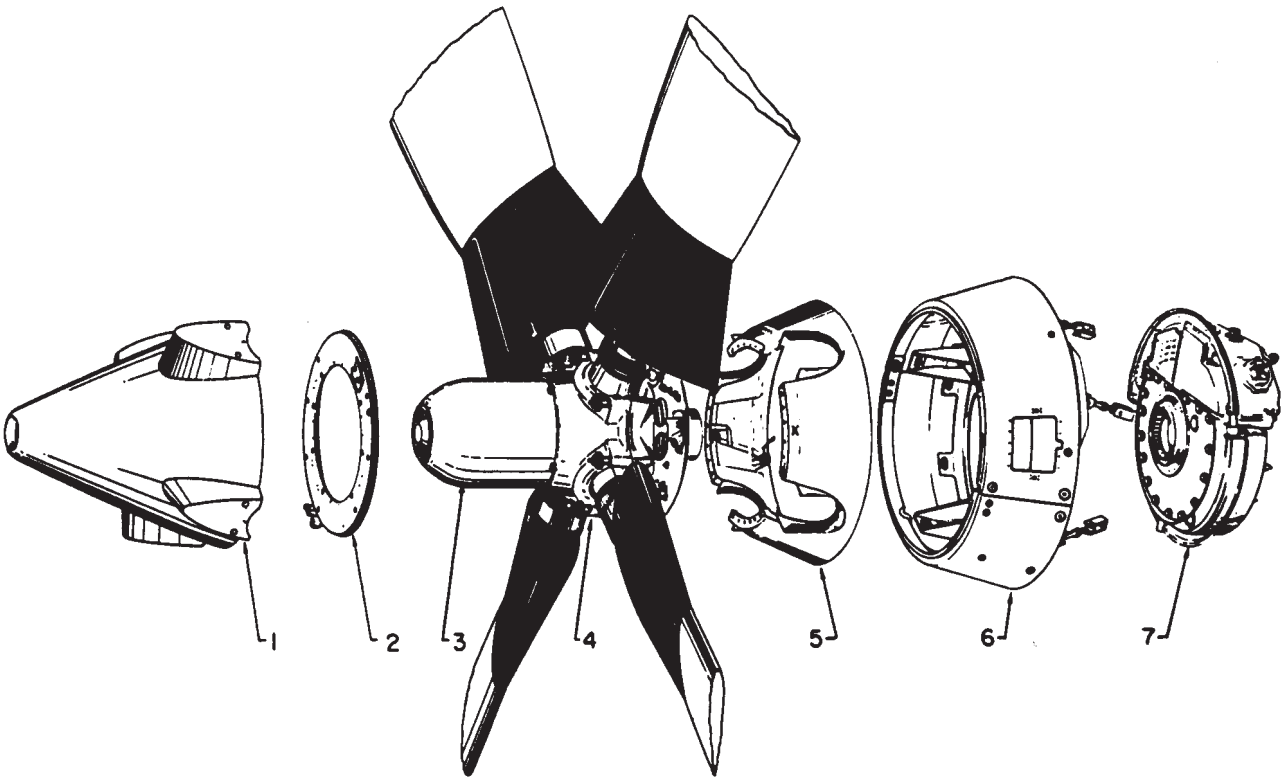

1. FRONT SPINNER ASSEMBLY
2. HUB-MOUNTED BULKHEAD ASSEMBLY
3. DOME ASSEMBLY
4. PROPELLER ASSEMBLY
5. REAR SPINNER ASSEMBLY
6. AFTERBODY ASEMBLY
7. CONTROL ASSEMBLY

ANF0615

Figure 6-15.—Propeller assembly and associated parts.

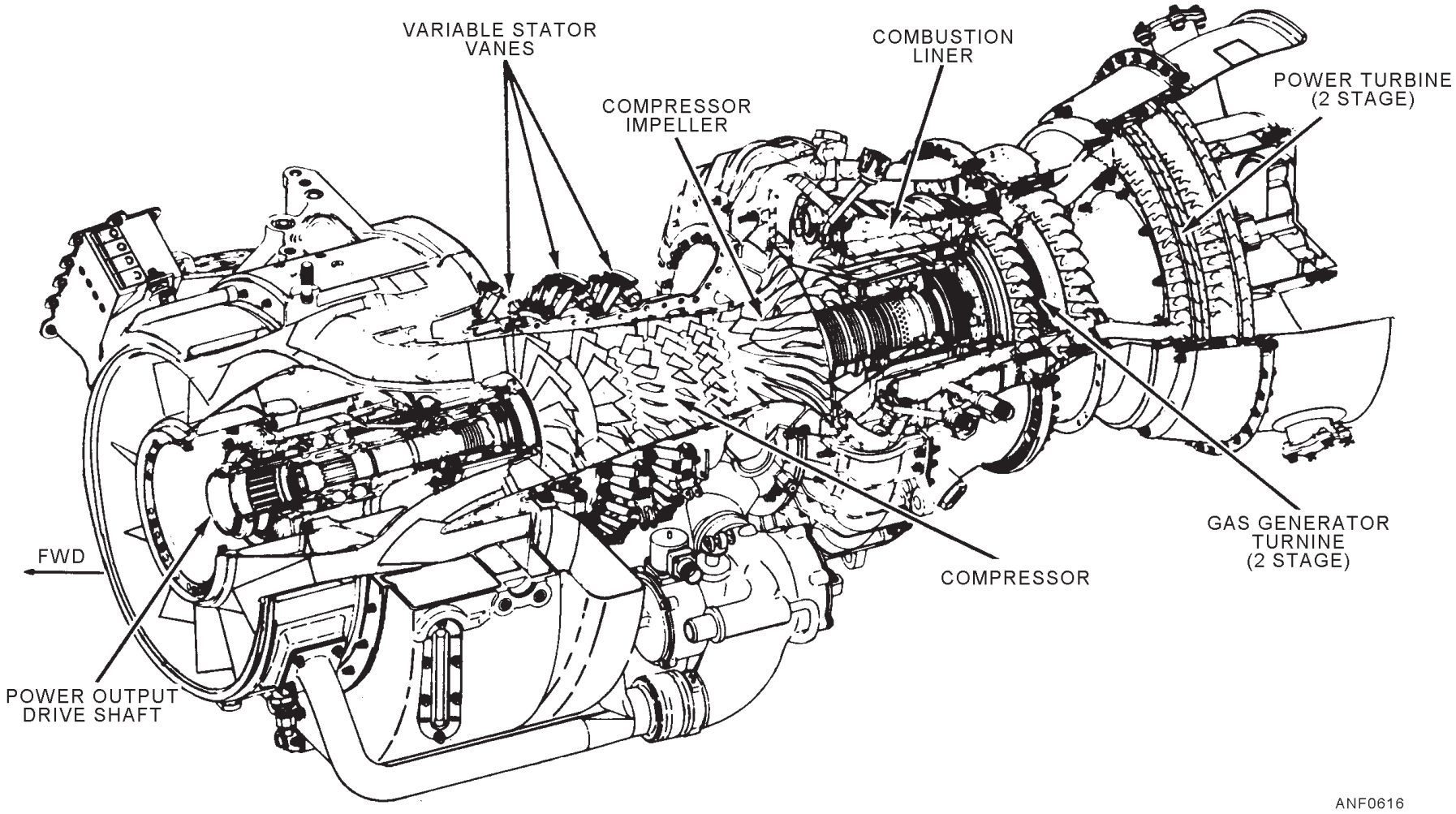

Figure 6-16.—Turboshaft gas turbine engine.

Turboshaft engines have a high power-to-weight ratio and are widely used in helicopters. Figure 6-16 shows a typical turboshaft engine.

This engine is an axial-flow turboshaft engine incorporating the free turbine principle. It is comprised of a compressor, combustor, gas generator turbine, and power turbine. The engine is equipped with a control system that modulates fuel flow to maintain constant power turbine output speed for a given speed selector setting in the governed range. This system maintains the selected speed by automatically changing the fuel flow to increase or decrease gas generator speed. The pilot determines the speed by positioning the power lever. The control system provides automatic protection against compressor stall, turbine overtemperature, overspeed of either turbine assembly, and combustion flameout.

An emergency throttle system is provided for use in case of fuel control failure. A starter, mounted at the nose of the engine, drives the gas generator rotor and engine accessories for engine starting. The engine is installed with its nose facing forward and supported by engine mounts bolted to the aircraft fuselage. Air is supplied to the engine through the inlet air duct, located inside the right-hand side door of the center nacelle. An alternate air door is attached to the duct by a hinge. Air is supplied through the alternate air door when an insufficient amount of air comes into the engine through the main air duct. The engine is installed so that with the nacelle removed, all accessories and components can be easily reached and maintained.

Turbofan Engines

There are also many different models of this type of engine. The S-3, AV-8, and F/A-18 are examples of aircraft that use this engine.

The turbofan engine (fig. 6-17) is similar to the turboprop, except a fan replaces the turboprop propeller. One basic operational difference between the two engines is the airflow. The fan is inside a cowling, and as a result the airflow through the fan is unaffected by the aircraft's speed. These factors eliminate loss of operational efficiency at high speeds, which limits the maximum airspeed of propeller-driven (turboprop) aircraft.

The turbofan engine has a duct-enclosed fan mounted at the front or rear of the engine. The fan runs at the same speed as the compressor, or it may be mechanically geared down. An independent turbine located to the rear of the compressor drive turbine may also drive the fan.

The fan draws in more air than the compressor of a turbojet engine because of the larger area of the inlet. Because the larger amount of air is compressed and accelerated by the fan, the air completely bypasses the burner and turbine sections of the engine and exits through the fan exit ducts. Since the air is not heated by burning fuel to obtain thrust, the turbofan engine has lower fuel consumption. To develop thrust, the turbofan engine accelerates a large amount of air at a relatively low velocity, which improves its propulsion efficiency.

Compared to the turbojet, the turbofan engine has a low engine noise level. The low noise level results from the lower gas velocity as it exits the engine tailpipe. One reason for the decreased velocity is an additional turbine stage in the engine. This additional turbine stage extracts power from the exhaust gases to drive the fan.

The aircraft powered by a turbofan engine has a shorter takeoff distance and produces more thrust during climb than a turbojet of approximately the same size. This extra thrust allows the turbofan aircraft to take off at a much higher gross weight.

Gas Turbine Engine Component Controls, Systems, And Sections

In addition to the five major components discussed as part of the turbojet engine, there are numerous controls, systems, and sections that are common to all four types of gas turbine engines. Among the more important of these are the fuel control, lubrication system, ignition system, and accessory section.

FUEL CONTROL.—Depending upon the type of engine and the performance expected of it, fuel controls may vary in complexity. They may range from simple valves to automatic computing controls containing hundreds of intricate, highly machined parts.

The pilot of a gas turbine powered aircraft does not directly control the engine. The pilot's relation to the power plant corresponds to that of the bridge officer on a ship. The bridge officer obtains engine response by relaying orders to an engineer below deck, who, in turn, actually moves the throttle of the engine.

Modern fuel controls are divided into two basic groups, hydromechanical and electronic. The controls sense some or all of the following engine operating variables:

1. Pilot's demands (throttle position)

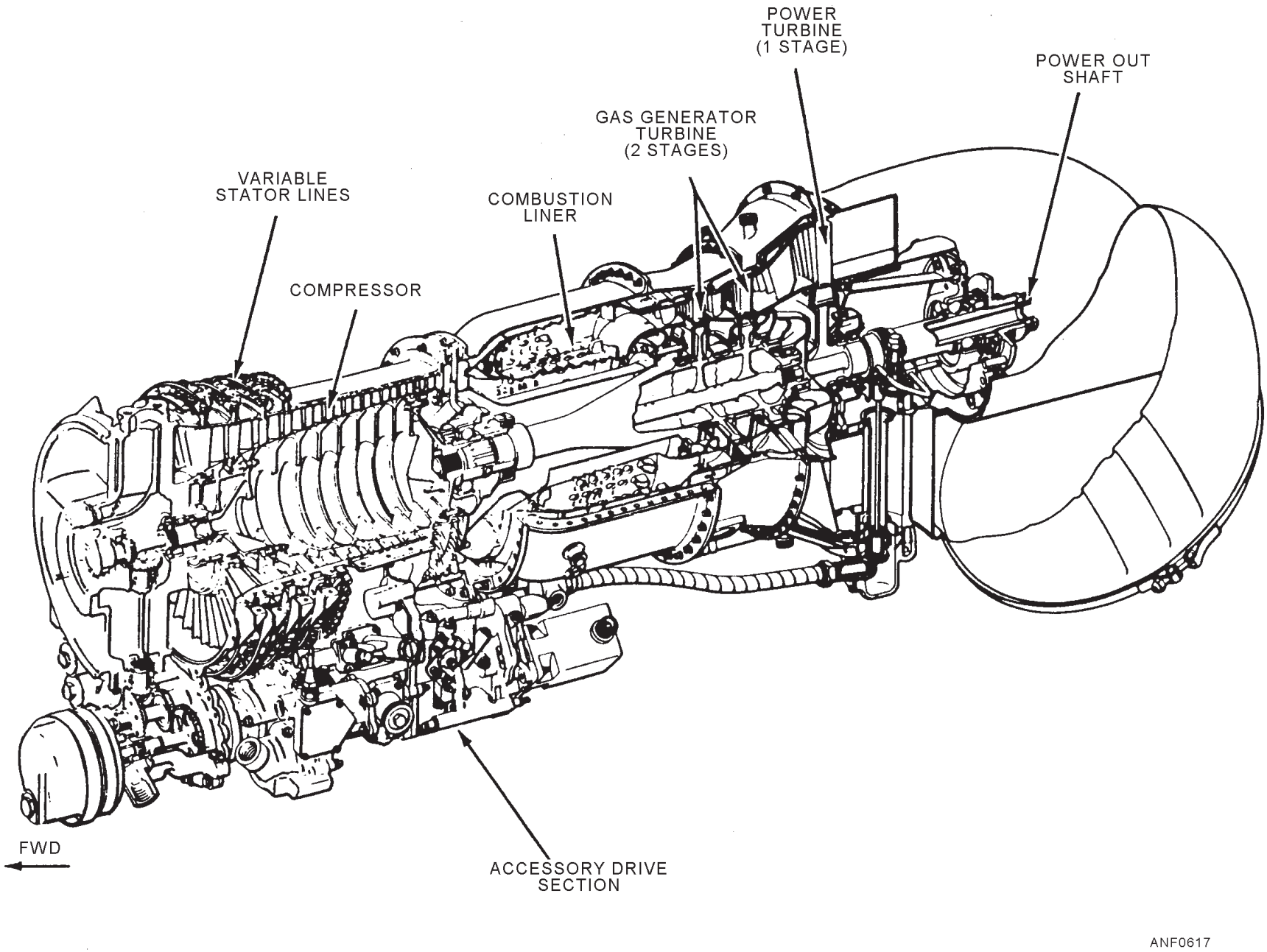

Figure 6-17.—Turbofan engine.

2. Compressor inlet temperature
3. Compressor discharge pressure
4. Burner pressure
5. Compressor inlet pressure
6. RPM
7. Turbine temperature

The more sophisticated fuel controls sense even more operating variables.

The fuel control is the *heart* of the gas turbine engine fuel system. This complex device schedules fuel flow to the engine combustion chamber. It automatically provides fuel flow as dictated by the operating conditions of the engine (temperature, pressures, altitude, throttle position, etc.).

The fuel control combines the inputs of throttle position, compressor discharge pressure, compressor inlet temperature, and engine speed to produce the fuel flow to operate the engine. The fuel control governs the engine speed by controlling fuel flow. Fuel flow variations are limited to ensure fast stall-free acceleration and deceleration. During throttle bursts, the fuel control also postpones the initiation of the afterburner operation (if installed) to achieve the fastest possible acceleration.

LUBRICATION SYSTEM.—The oil lubrication systems of modern gas turbine engines vary in design and plumbing. However, most systems have units that perform similar functions. In a majority of cases, a pressure pump or system furnishes oil to lubricate and cool several parts of the engine. A scavenging system returns the oil to the tank for reuse. Overheating is a problem in gas turbine engines. Overheating is more severe after the engine stops than while it is running. Oil flow, which normally cools the bearings, stops. The heat stored in the turbine wheel now raises the temperature of the bearings much higher than when the engine was running. The oil moves heat away from these bearings to prevent overheating. Most systems include a heat exchanger to cool the oil. Many systems have pressurized sumps and a pressurized oil tank. This equipment ensures a constant head pressure to the pressure lubrication pump to prevent pump cavitation at high altitudes.

Oil consumption is relatively low in a gas turbine engine compared to a piston-type engine. Oil consumption in the turbine engine primarily depends upon the efficiency of the seals. However, oil can be lost through internal leakage, and, in some engines, by malfunctioning of the pressurizing or venting system. Oil sealing is very important in a jet engine. Any wetting of the blades or vanes by oil vapor causes accumulation of dust or dirt. Since oil consumption is so low, oil tanks are made small to decrease weight and storage problems.

The main parts of the turbine requiring lubrication and cooling are the main bearings and accessory drive gears. Therefore, lubrication of the gas turbine engine is simple. In some engines the oil operates the servomechanism of fuel controls and controls the position of the variable-area exhaust nozzle vanes.

Because each engine bearing gets its oil from a metered or calibrated opening, the lubrication system is known as the calibrated type. With few exceptions, the lubricating system is of the dry sump design. This design carries the bulk of the oil in an airframe or engine-supplied separate tank. In the wet sump system, the oil is carried in the engine itself. All gas turbine engine lubrication systems normally use synthetic oil.

Figure 6-18 shows components that usually make up the dry sump oil system of a gas turbine engine.

IGNITION SYSTEM.—Modern gas turbine engines use high voltage and a spark of high heat intensity. The high-energy, capacitor-discharge type of ignition system provides both high voltage and an exceptionally hot spark. This system assures ignition of the fuel-air mixture at high altitudes.

There are two types of capacitor discharge ignition systems. The high-voltage and the low-voltage systems with dc or ac input. The high-voltage system produces a double spark. The double spark is a high-voltage component. This component ionizes (makes conductive) the gap between the igniter plug electrodes so that the high- energy, low-voltage component may follow. In the low-voltage system, the spark is similar to the high-voltage system, but uses a self-ionizing igniter plug.

WARNING

Because of the high power in these ignition systems, you must be careful to prevent a lethal electrical shock from capacitors. Always avoid contact with leads, connections, and components until the capacitors have been grounded and are fully discharged.

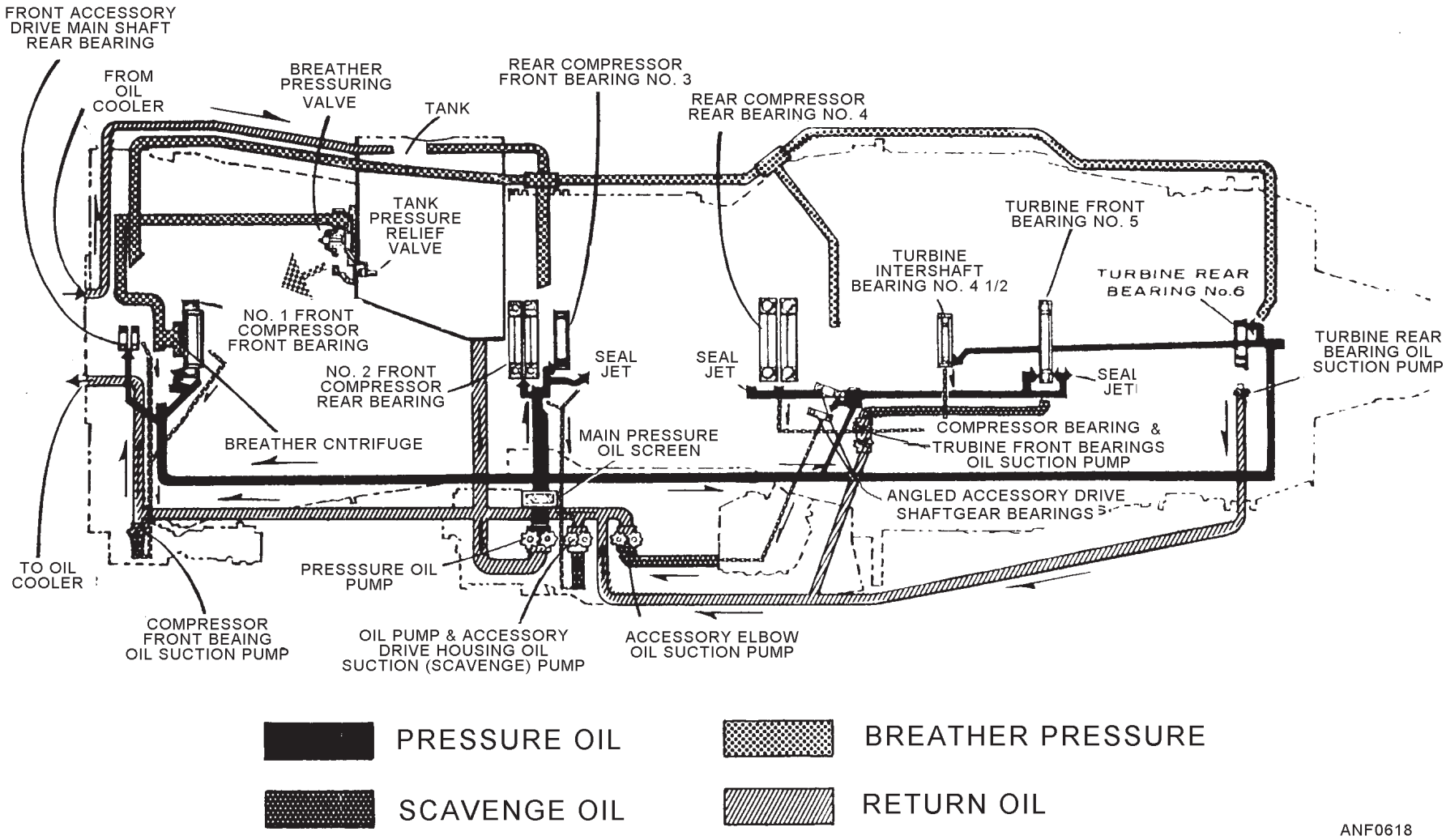

Figure 6-18.—Dry sump oil system.

Figure 6-19 shows a typical spark igniter.

ACCESSORY SECTION.—The accessory section of the gas turbine engine is usually mounted beneath the compressor section. This section contains an accessory drive gearbox, a housing (case), and provisions for mounting the engine-driven accessories (constant speed drive transmission, fuel and oil pumps, and electrical and tachometer generators, etc.). In gas turbine engines with air turbine starters, the starter is mounted on the forward face of the accessory gearbox. The accessory gearbox also includes many of the gas turbine engine's internal lubrication system components.

Q6-1. What are the four types of jet propulsion engines?

Q6-2. Describe the basic operating principle for all jet engines.

Q6-3. The law that states "for every acting force there is an equal and opposite reacting force" describes how air escaping from the rear of a balloon propels the balloon in the opposite direction. What law does this illustrate?

Q6-4. What is the simplest power plant that uses atmospheric air to support combustion?

Q6-5. What jet engine doesn't have either a compressor or a turbine and can't take off under its own power?

Q6-6. What are the four types of gas turbine engines?

Q6-7. What are the five major components of a turbojet?

Q6-8. What are the three major assemblies of the turboprop engine?

Q6-9. Turboshaft engines are normally found on what type of aircraft?

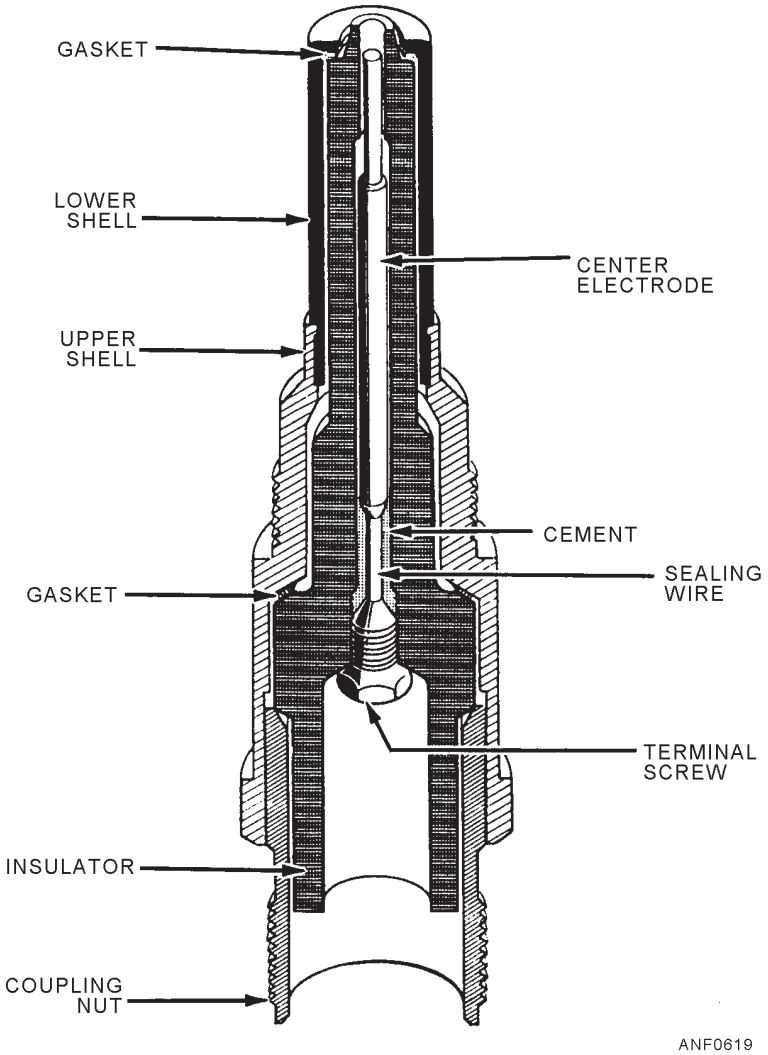

Figure 6-19.—Spark igniter.

Q6-10. What is the major difference between a turboshaft and a turbofan engine?

*Q6-11. What is the **heart** of the gas turbine fuel system?*

Q6-12. List some of the engine-operating variables that are sensed by modern fuel controls.

Q6-13. What are the two main parts of a turbine that need lubrication?

Q6-14. In most lubricating systems, a pressure pump or system provides oil that lubricates and cools. What system returns the oil to the tank for reuse?

Q6-15. What is the difference between low- and high-voltage capacitor discharge ignition systems?

Q6-16. Where is the accessory section of the gas turbine engine usually mounted?

THE BRAYTON CYCLE

LEARNING OBJECTIVE: Recognize the Brayton cycle and its application to gas turbine and jet engines.

A cycle is a process that begins with certain conditions and ends with those same conditions. The Brayton Cycle is illustrated in figure 6-20. Note that in the gas turbine engine, each cycle is not only performed continuously, but also by a separate component designed for its particular function.

Since all of the events are going on continuously, we can say that all gas turbine engines work on an open cycle. Figure 6-20 compares the cycles of operation of a piston-type (reciprocating) engine and a gas turbine engine. The piston-type engine produces power by intermittent combustion. The gas turbine engine produces power continuously.

Q6-17. What is the Brayton cycle?

ENGINE IDENTIFICATION

LEARNING OBJECTIVE: Identify the two engine designation systems to include symbols, numbers, indicators, and special designators.

Presently two engine designation systems identify aircraft power plants. One system is described in Air

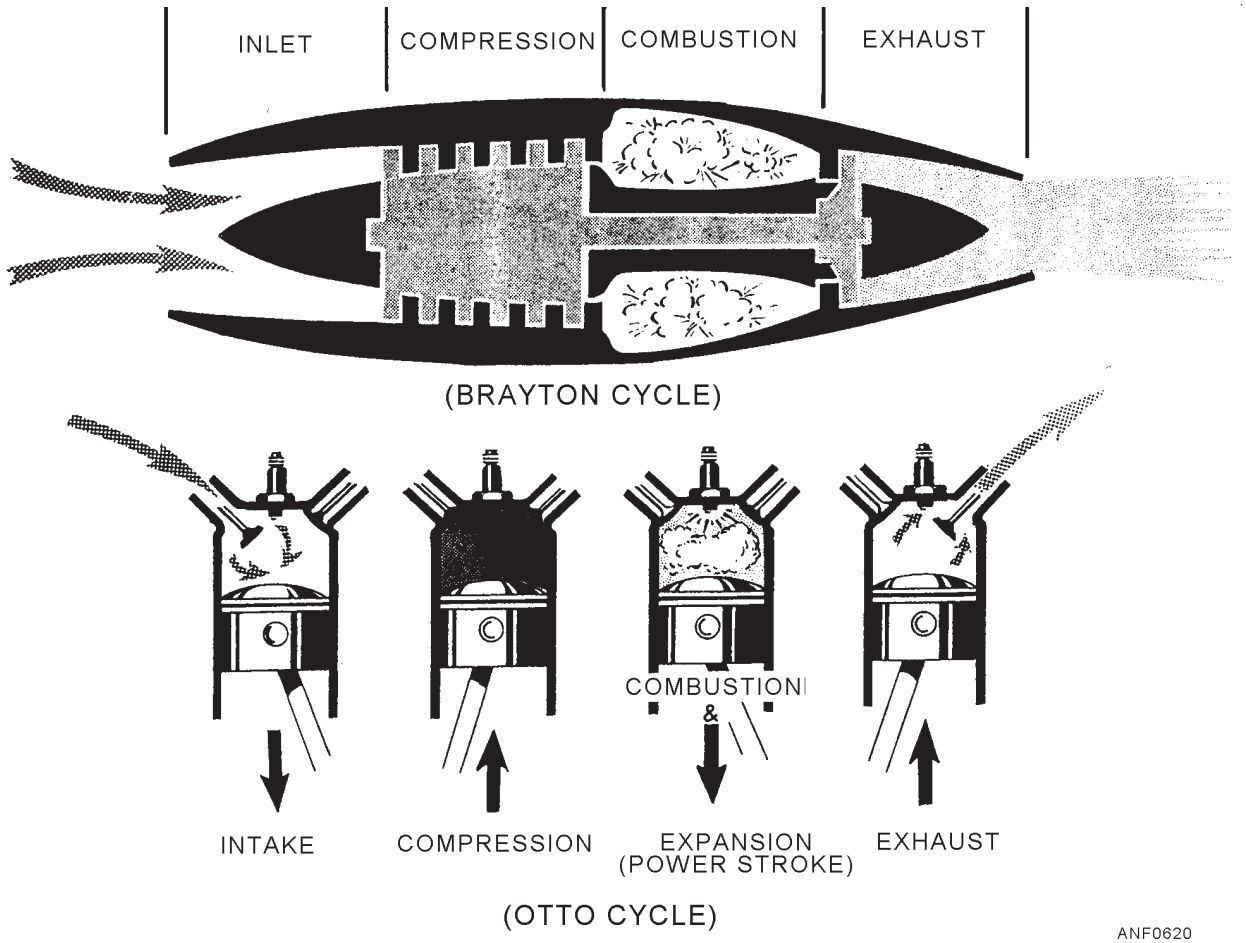

Figure 6-20.—A comparison of turbojet and reciprocating engine cycles.

Table 6-1.—Aircraft Letter Symbols and Engine Types

SYMBOL	ENGINE TYPE
R	Internal combustion, air-cooled, radial engine (reciprocating)
J	Aviation gas turbine (turbojet engine)
T	Aviation gas turbine (turboprop and turboshaft engines)
TF	Turbofan engine
PJ	Pulsejet engine
RJ	Ramjet engine

Force-Navy Aeronautical (ANA) Bulletin No. 306M. The other system, MIL-STD-1812 designation system, includes all newly developed (Air Force, Army, and Navy) gas turbine engines.

These designation systems use standard symbols to represent the types and models of engines now used in military aircraft.

ANA BULLETIN NO. 306M DESIGNATION SYSTEM

The following paragraph describes the ANA Bulletin No. 306M designation system. This system has no provisions for Army designation. T56-A-14 is an example of this systems designation number.

Type Symbols

The first part of the designation system is a letter (or letters) that indicates each basic engine type. Table 6-1 shows the letter symbols that identify engine types.

A number follows the first letter symbol. The using armed service assigns the number used in conjunction with the letter symbol as follows:

- The number 30 for the Navy. The Navy has even numbers.
- The number 31 for the Air Force. The Air Force has odd numbers.

The designation of odd or even numbers does not restrict the use of the engine to the sponsoring service. Aircraft engines, regardless of type designation, are used by various services, depending on their applicability for a particular aircraft. In some instances, engines are made interchangeable for a particular airframe.

Manufacturer's Symbol

The second part of the designation is a dash and a letter symbol that indicates the engine manufacturer. Some of the manufacturers are listed in table 6-2.

Table 6-2.—Engine Manufacturers

MANUFACTURER SYMBOL	MANUFACTURER
AD	Allison Division, General Motors Corp.
BA	Bell Aircraft Company
CA	Continental Aviation and Engineering Corp.
CP	United Aircraft of Canada Ltd.
GA	AiResearch Division, Garrett Corp.
GE	General Electric Company
LA	Lockheed Aircraft Company
LD	Lycoming Division, Avco Corp.
MD	McDonald-Douglas, Aircraft Company
PW	Pratt and Whitney Aircraft Division, United Aircraft Corp.
RR	Rolls Royce, Ltd.
WA	Curtis-Wright Corp
WE	Westinghouse Electric Company

Special manufacturer's symbols may be assigned when two manufacturers are jointly producing an engine. In these instances, the manufacturer's symbol is one letter from each of the manufacturers' symbols.

Model Numbers

The third part of the designation is a dash and a number indicating the model number.

- Navy numbers begin with 2, and they continue with consecutive even numbers. All even model numbers are assigned to engines approved by the Naval Air Systems Command.
- Air Force numbers begin with 1 and continue with consecutive odd numbers.

Each engine design has only one type and model designation for both the Air Force and Navy. For example, the Navy may wish to use an engine that has Air Force-approved type and model numbers. The Navy may use those numbers without change, provided there are no engine changes. If the Air Force wants to use a Navy-approved type engine, but requires minor engine production changes, the Air Force must use the Navy type designation. The Air Force then assigns its own model designation (which begins with the number 1 and progresses with consecutive odd numbers) to the modified engine, regardless of the Navy model number. This model number is actually a modification number. It tells which service made the last production change to the engine for a particular aircraft application.

Special Designations

The letter X or Y preceding the basic designation signifies a special designation.

The prefix letter X is a basic engine designation signifying the experimental and service test of a particular engine. This prefix letter is removed after tests prove the engine can perform as it should under all operating conditions.

The prefix letter Y indicates a Restricted Service designation. It indicates that the engine will not, or is not expected to, perform satisfactorily under all operating conditions. It is applied to an engine with a specific function or that has completed a 150-hour qualification test only. Upon satisfactorily completing the qualification testing, the Y designation is dropped. The engine is then approved for installation in a production aircraft.

The following is an example of a complete ANA Bulletin No. 306M engine designation number:

T56-A-14

- T—Turboprop
- 56—Navy developed
- A—Allison
- 14—Navy model

The ANA Bulletin No. 306M designation system is effective until each engine manufactured before the introduction of MIL-STD-1812 is modified or deleted from service.

MIL-STD-1812 DESIGNATION SYSTEM

This engine designation system is made up of three-digit numerals and model numbers. It is used on all newly developed gas turbine engines. Existing engines receive a new three-digit model number whenever there are major changes in engine configuration or design. In most instances the old two-digit indicator will be retained. The MIL-STD-1812 engine designation system applies to all the armed services—Air Force, Navy, and the Army.

The complete designation system has three parts—the type indicator, the manufacturer's indicator, and the model indicator. Special designations in this system are the same as those discussed under the ANA Bulletin No. 306M system (X or Y preceding the basic designation).

Type Indicator

The first part is the type indicator. It consists of the type letter symbol and the type numeral. Letter type symbols are shown in table 6-3:

Table 6-3.—Engine Type Indicator

INDICATOR	ENGINE TYPE
J	Turbojet
T	Turboprop/Turboshaft
F	Turbofan

The type numerals and type letter symbol are assigned consecutively by each of the services. The numerals begin as follows:

- 100—Air Force
- 400—Navy
- 700—Army

Model Indicator

The third part is the model indicator. It is a dash and a model number, or a dash and a model number with a suffix letter.

Each configuration of the engine has an assigned model number. Each of the services assigns a block of numbers that are used consecutively.

- 100—Air Force
- 400—Navy
- 700—Army

NOTE: If one service uses another services' designated engines, the designation remains the same unless a model change is required. Only in this case will the model indicator change to indicate the engine has been modified.

F401-PW-400 is an example of a MIL-STD-1812 engine designation.

- F Turbofan
- 401 Second Navy turbofan in designation system
- PW Pratt and Whitney Aircraft Division, United Aircraft Corporation
- 400 First Navy model of this particular engine

Q6-18. What are the two engine designation systems used to identify aircraft power plants?

Q6-19. What does the letter X or Y preceding the basic designation signify?

Q6-20. What are the three parts of the MIL-STD-1812 designation system?

Q6-21. F401-PW-400 is an example of what engine designation system?

POWER PLANT SAFETY PRECAUTIONS

LEARNING OBJECTIVE: Recognize power plant safety precautions that apply to the intake ducts, exhaust area, and engine noise.

Operational readiness of a maximum number of aircraft power plants is necessary if naval aviation is to successfully perform its mission. Keeping aircraft and power plants in top operating condition is the principal function of naval aviation maintenance personnel. This maintenance work must be performed without injury to personnel.

Every person connected with power plant maintenance is responsible for discovering and eliminating unsafe work practices. In the following section, we will discuss a few standard safety precautions. You must follow these precautions to prevent injury to yourself or others working on or near aircraft jet engines.

INTAKE DUCTS

The air intake ducts of operating jet engines are an extreme hazard to personnel working near the aircraft. Ducts are also a hazard to the engine itself if the area around the front of the aircraft is not kept clear of debris. The air intake duct develops enough suction to pull an individual, or hats, eye glasses, etc., into the intake. The hazard is obviously greatest during maximum power settings. Protective screens for the ducts are part of the aircraft's ground-handling equipment. These screens must be installed prior to all maintenance turnups.

EXHAUST AREA

Jet engine exhausts create many hazards to personnel. The two most serious hazards are the high temperature and the high velocity of the exhaust gases from the tailpipe. High temperatures are present several hundred feet from the tailpipe. The closer you get to the aircraft, the higher the exhaust temperatures and the greater the danger.

When a jet engine is starting, sometimes excess fuel will accumulate in the tailpipe. When this fuel ignites, long flames shoot out of the tailpipe at very high velocity. You will want to stay clear of this danger at all times.

ENGINE NOISE

Jet engine noise can cause temporary or permanent hearing loss. Hearing loss occurs when your unprotected ear is exposed to high sound intensities for excessive periods of time. The higher the sound level, the less time it takes to damage your hearing. Without ear protection, persons exposed to sound intensities above 140 dB (decibels) for any length of time may suffer serious hearing damage. You must wear proper ear protection at all times. You should wear **double** hearing protection when working around turning aircraft.

As an Airman, you must be familiar with all aircraft general safety precautions as well as those peculiar to your squadron. The life you save may be your own.

Q6-22. What device must be installed before all maintenance turnups?

Q6-23. List the two most serious hazards when working around engine exhausts?

Q6-24. Why should you wear ear protectors when working around jet engines?

SUMMARY

In this chapter, you have been introduced to jet and gas turbine engines. You have learned basic operating principles and how various parts of these engines operate.

ASSIGNMENT 6

Textbook Assignment: "Aircraft Power Plants," chapter 6, pages 6-1 through 6-20.

6-1. In 250 B.C., the first reaction engine was built by what group of people?

1. Romans
2. Egyptians
3. Greeks
4. Babylonians

6-2. Naval aircraft jet propulsion engines may be identified by what total number of categories?

1. One
2. Two
3. Three
4. Four

6-3. The gas turbine engine powers almost all Navy aircraft.

1. True
2. False

6-4. Rocket engines carry their own oxidizer for combustion for what primary reason?

1. For travel above the atmosphere
2. For travel within the atmosphere
3. To take the place of hydrogen
4. To take the place of carbon

6-5. Jet propulsion engine operations can be explained by which of the following laws of motion?

1. Newton's first
2. Newton's second
3. Newton's third
4. Newton's fourth

6-6. When the stem of an inflated balloon is released, what action causes the balloon to move forward?

1. The force of the escaping air
2. The low-pressure area against the front of the balloon
3. The pressure from inside the balloon pushing against the outside air
4. The pressure of the air on the inside of the balloon directly opposite the open stem

6-7. A basic gas turbine engine consists of what total number of major sections?

1. Six
2. Five
3. Three
4. Four

6-8. Most of the air taken into the combustion chamber of a jet engine is used for what purpose?

1. Compression
2. Propulsion
3. Combustion
4. Cooling

6-9. A compressor stage consists of what row(s) of blades or vanes?

1. Rotating blades only
2. Stator vanes only
3. Rotating blades and stator vanes
4. Three or more rows of rotating blades and stator vanes

6-10. In a compressor, the air pressure increases each time it passes through a set of rotors and stators for which of the following reasons?

1. The areas of the rotors and stators gets larger
2. The areas of the rotors and stators gets smaller
3. The spool area of the stators increases
4. The spool area of the rotors increases

6-11. Since the initial appearance of the split-spool compressor engine, the potential thrust of today's engines has been boosted considerably. These compressors are driven individually by what means?

1. The turbine assembly
2. Separate wheels of the turbine assembly
3. The rotor assembly
4. The stator assembly

6-12. Compressor stalls may be eliminated by using which of the following systems?

1. Rotor vane and stator vane system
2. Inlet guide vane and stator vane system
3. Front and rear compressor system
4. Compressor bleed-air system and variable vane system

6-13. Which of the following is NOT a basic requirement for a satisfactory and efficient combustion chamber system?

1. Light weight
2. A minimum pressure drop
3. A high rate of burning
4. Can-annular design

6-14. Fuel is introduced into the combustion chamber at what location?

1. Back of the combustion chamber
2. Top of the combustion chamber
3. Front of the combustion chamber
4. Bottom of the combustion chamber

6-15. A gas turbine engine normally has provisions for what total number of igniter plugs in the combustion chamber?

1. One
2. Two
3. Three
4. Four

6-16. The flame from the chambers containing the igniter plugs is spread to the remaining chambers through what design feature?

1. Guide vanes
2. Drilled holes
3. Flame tubes/cross ignition tubes
4. Louvers

6-17. What percent of the air in the combustion chamber actually takes part in the combustion process?

1. 25%
2. 35%
3. 45%
4. 55%

6-18. Secondary air is used in the combustion chamber for what purpose?

1. To dilute and cool the hot gases
2. To help the combustion process
3. To drive the compressor
4. To drive the turbine

6-19. What function does the turbine assembly serve?

1. It develops exhaust gas power
2. It reduces the speed of the compressor
3. It increases the turbine gas temperatures
4. It drives the compressor

6-20. The flowing gases from the combustion chamber of a turbojet engine act directly against what engine component?

1. Impeller
2. Compressor
3. Turbine disk blades
4. Auxiliary equipment

6-21. Turbine blades are normally made from what material alloy?

1. Copper
2. Aluminum
3. Magnesium
4. Steel

6-22. What is the function of the inner cone in the exhaust section?

1. To eliminate exhaust gas turbulence
2. To direct air to the outer exhaust cone
3. To give support to the exit guide vanes
4. To cool the turbine wheel

6-23. The inner cone is attached to the outer cone by what means?

1. Copper alloy tubes
2. Streamlined vanes called brace assemblies
3. Stainless steel sheets
4. Tapered cylinder-shaped brackets

6-24. The exhaust cone is made from what material?

1. Aluminum alloy
2. Stainless steel sheets
3. High-temperature alloy
4. Low-temperature alloy

6-25. What material is used to insulate the cone?

1. High-temperature alloy
2. Copper sheets
3. Aluminum alloy sheets
4. Aluminum foil

6-26. The turboprop engine is capable of developing what maximum horsepower per pound of weight?

1. 1/2 hp
2. 1 1/2 hp
3. 2 hp
4. 2 1/2 hp

6-27. A turboprop engine has what total number of major assemblies?

1. One
2. Two
3. Three
4. Four

6-28. What component of the power section of a turboprop engine provides the power that drives the propeller?

1. Turbine
2. Combustion chamber
3. Compressor
4. Exhaust

6-29. Torsional deflection in a turboprop engine is an indication of what variable?

1. Temperature
2. Horsepower
3. Pressure
4. Rpm

6-30. What is the function of the reduction gear assembly?

1. To change the propeller blade angle to a variable rpm
2. To provide a constant rpm unit for propeller operation
3. To reduce the engine rpm to within the range of efficient propeller rpm
4. To provide higher propeller rpm than the engine provides

6-31. What is the basic function of the propeller assembly?

1. To efficiently develop thrust
2. To drive the reduction gearbox assembly
3. To drive the compressor section
4. To efficiently develop rpm

6-32. Turboshaft engines are currently being used on which of the following types of aircraft?

1. Fighters
2. Attack
3. Transport
4. Helicopters

6-33. Which of the following types of gas turbine engines operates on the free turbine principle?

1. Turboprop
2. Turboshaft
3. Turbofan
4. Turbojet

6-34. During all operations of the turboshaft engine, automatic protection is provided for which of the following malfunctions?

1. Turbine overspeed, compressor stall, combustion flame-out, and turbine overtemperature
2. Compressor overspeed, turbine stall, turbine overtemperature, and combustion flame-out
3. Combustion flame-out, turbine under temperature, turbine overspeed, and compressor stall
4. Turbine underspeed, compressor stall, combustion flame-out, and turbine overtemperature

6-35. Operation of the turbofan engine is similar to which of the following gas turbine engines?

1. Turboshaft
2. Turbojet
3. Turboprop
4. Turbopulse

6-36. The turbofan engine has a low rate of fuel consumption.

1. True
2. False

6-37. A turbofan powered aircraft that is approximately the same size as a turbojet aircraft is capable of accomplishing which of the following tasks?

1. Handling higher gross weight at takeoff
2. Producing more thrust during climb
3. Using shorter takeoff distance
4. Each of the above

6-38. What factor causes the low noise level of the turbofan engine?

1. The enclosed fan, which is driven at the engine's speed
2. The high velocity of compressed air that passes through the burner and turbine sections
3. The increased thrust from the use of the afterburner
4. The low gas velocity coming out of the tailpipe

6-39. What are the two basic groups of modern fuel control systems?

1. Pneumatic and pressure
2. Hydromechanical and electronic
3. Automatic and manual
4. Pressure and mechanical

6-40. What is considered to be the "heart" of a gas turbine engine fuel system?

1. Fuel control
2. Fuel cell pumps
3. Fuel cross-feed valves
4. Fuel shutoff valve

6-41. Which of the following inputs does the fuel control system combine to operate a gas turbine engine?

1. Fuel flow, compressor pressure, turbine speed, and temperature
2. Combustion, ignition, altitude, fuel flow, and acceleration
3. Engine speed, altitude, exhaust temperature, and throttle position
4. Throttle position, compressor discharge pressure, engine speed, and compressor inlet temperature

6-42. What lubrication system returns engine oil back to the oil tank for reuse?

1. Pressure pump system
2. Wet sump system
3. Scavenge system
4. Pressurized sump system

6-43. The purpose of a pressurized oil tank in the lubricating system of a gas turbine engine is to prevent pump cavitation under what condition?

1. High altitude
2. Engine start
3. Low altitude
4. Engine stop

6-44. The lubricating system used on a gas turbine engine is, with few exceptions, always the dry sump design.

1. True
2. False

6-45. What type of oil is used in all gas turbine engine lubrication systems?

1. Synthetic oil
2. Petroleum-based oil
3. Animal fat-based oil
4. Mineral-based oil

6-46. What type of ignition system has been universally accepted for use in a gas turbine engine?

1. Low spark, capacitor
2. High capacitor, low spark
3. High energy, capacitor
4. Low capacitor, low energy

6-47. To avoid a lethal electrical shock from the ignition system, which of the following components must be grounded before maintenance work can be started?

1. Resistors
2. Igniter plugs
3. Spark plugs
4. Capacitors

6-48. The accessory section is usually mounted to what section on a gas turbine engine?

1. Turbine section
2. Combustion section
3. Compressor section
4. Exhaust section

6-49. The term used to describe a process that begins with certain conditions and ends with those same conditions is known as "Brayton Cycle."

1. True
2. False

6-50. The MIL-STD-1812 designation system has no provision for what branch of the armed forces?

1. Navy
2. Army
3. Air Force
4. Coast Guard

IN ANSWERING QUESTIONS 6-51 THROUGH 6-53, REFER TO TABLE 6-1.

6-51. What aircraft letter symbol identifies a turbojet engine?

1. RJ
2. R
3. J
4. T

6-52. What aircraft letter symbol identifies a turboshaft engine?

1. R
2. J
3. T
4. TF

6-53. What aircraft letter symbol identifies a turbofan engine?

1. R
2. J
3. T
4. TF

6-54. Following the first letter symbol identifying the engine type, a number appears to identify the service that uses the engine(s). Which of the following numbers represents an Air Force engine?

1. 20
2. 30
3. 31
4. 40

IN ANSWERING QUESTIONS 6-55 THROUGH 6-58, REFER TO TABLE 6-2 IN THE TEXT.

6-55. The manufacturer's symbol BA identifies which aircraft engine manufacturer?

1. Allison Division, General Motors Corporation
2. General Electric Company
3. Bell Aircraft Company
4. McDonald–Douglas Aircraft Company

6-56. What engine manufacturer's symbol identifies the Lockheed Aircraft Company?

1. LA
2. LD
3. AD
4. GA

6-57. The manufacturer's symbol PW identifies which aircraft engine manufacturer?

1. Rolls Royce, Ltd.
2. Westinghouse Electric Company
3. AiResearch Division, Garrett Corporation
4. Pratt and Whitney Aircraft Division

6-58. What engine manufacturer's symbol identifies the Curtis-Wright Corporation?

1. WE
2. WA
3. PW
4. MD

6-59. When two manufacturers' are jointly producing an engine, the symbol is one letter from each manufacturer's symbols.

1. True
2. False

6-60. The third part or section of the engine designation consists of a dash and a number indicating the model number. The Navy model number begins with 2 and continues with consecutive even numbers.

1. True
2. False

6-61. Under special engine designations, what prefix letter is assigned to experimental and service test engines?

1. W
2. X
3. Y
4. Z

6-62. Under special engine designations, what prefix letter is assigned to restricted service engines?

1. W
2. X
3. Y
4. Z

6-63. Normally the restricted service designation for an engine is dropped after completion of what total number of qualifying test hours?

1. 50 hr
2. 100 hr
3. 150 hr
4. 200 hr

6-64. The MIL-STD-1812 engine designation system is made up of what total number of parts or sections?

1. One
2. Two
3. Three
4. Four

6-65. The Air Force, Navy, and Army are assigned a block of engine configuration model numbers that are used consecutively.

1. True
2. False

6-66. What series or block of engine configuration model numbers are assigned to the Navy?

1. 100
2. 400
3. 700

6-67. Which of the following characters identifies the type of engine in the designation number F401–PW–400?

1. F
2. 401
3. PW
4. 400

6-68. Which of the following characters identifies the engine manufacturer in the designation number F401–PW–400?

1. F
2. 401
3. PW
4. 400

6-69. Which of the following personnel is/are responsible for trying to discover and eliminate unsafe work practices?

1. Commanding officer
2. Maintenance officer
3. Work center supervisor
4. All hands

6-70. The greatest hazard of working near the aircraft intake ducts occurs during which of the following operations?

1. Engine start
2. Engine stop
3. Maximum power
4. Minimum power

6-71. Serious hearing damage may occur to unprotected ears if the dB (decibel) level is greater than what maximum level?

1. 140 dB
2. 120 dB
3. 110 dB
4. 100 dB

CHAPTER 7

AIRCRAFT AVIONICS

INTRODUCTION

Modern naval aircraft have a wide variety of missions. The electronic equipment these aircraft carry enables them to perform these missions. We refer to this equipment as aviation electronics (avionics). The purpose of this chapter is to familiarize you with the most widely used avionics in the Navy.

Aircraft have two primary sources of electrical energy. The first is the generator, which converts mechanical energy into electrical energy. The second is the battery, which converts chemical energy into electrical energy. The generator is the main source and the battery is the auxiliary source. The Aviation Electrician's Mate (AE) rating maintains aircraft electrical systems.

AIRCRAFT STORAGE BATTERIES

LEARNING OBJECTIVE: Identify the basic operating principles and safety precautions for working around aircraft batteries.

The aircraft storage battery provides a reserve source of electrical power for selected electrical systems. During normal aircraft operation, the generator maintains the battery in a charged state.

Batteries can be dangerous; therefore, you need to use extreme care when working around them. Maintain the batteries in perfect condition. Batteries are the emergency power source for the aircraft. Do not use the batteries for starting engines or servicing equipment if another source of power is available. Unnecessary usage will shorten the battery life and decrease the power available for emergency operation. Batteries also require a great deal of care because of the unusual conditions under which they operate. Therefore, batteries are usually shielded by enclosing them in a grounded, metal-covered housing, as shown in figure 7-1.

Most aircraft batteries use a quick-disconnect receptacle and plug, as shown in figure 7-1. This unit is a heavy-duty connector with a handle attached to a threaded post. You can disconnect the battery cables from the battery posts simply by turning the handle and pulling the quick-disconnect unit.

LEAD-ACID BATTERY

Fundamentally, there is no difference between the lead-acid aircraft battery and the lead-acid automobile battery. Both have lead plates in a solution of sulfuric acid and water (electrolyte). Both operate on the same basic principles. The lead-acid battery consists of cells connected in series. Each cell contains positive plates of lead peroxide and negative plates of spongy lead.

NICKEL-CADMIUM BATTERY

The nickel-cadmium battery gets its name from the composition of its plates: nickel oxide on the positive plate and metallic cadmium on the negative plates. The electrolyte consists of potassium hydroxide and water. The fundamental unit of the nickel-cadmium aircraft storage battery is the cell. The sintered-plate

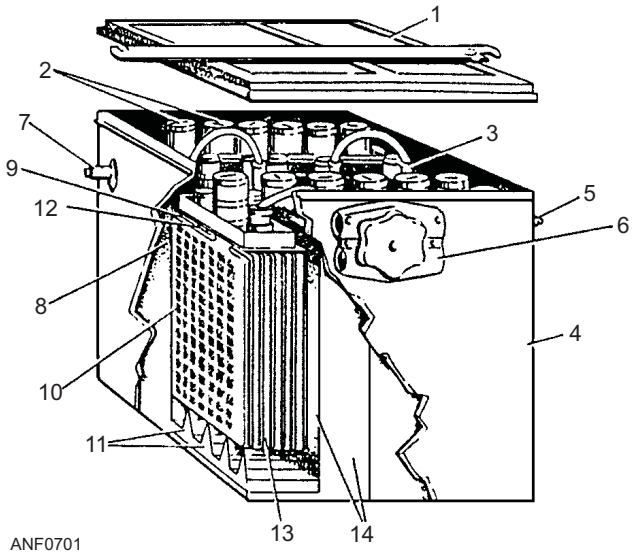

1. **Metal cover**
2. **Fillercap and vent plug**
3. **Cell connectors**
4. **Metal container**
5. **Vent**
6. **Quick-disconnect receptacle and plug**
7. **Vent**
8. **Cell container**
9. **Positive plate group strap**
10. **Plate**
11. **Plate supports**
12. **Negative plate group strap**
13. **Separators**
14. **Cells**

Figure 7-1.—Typical aircraft lead-acid storage battery.

nickel-cadmium cells used in the battery consist of two basic types–vented and sealed cells. Most naval aircraft nickel-cadmium storage batteries employ rectangular vented-type cells. Sealed cells have limited applications and come in both the rectangular and cylindrical types.

BATTERY SAFETY PRECAUTIONS

The principal hazard in working with lead-acid batteries is acid burns when you are refilling or handling them. You can prevent getting burned by wearing eyeshields, rubber gloves, rubber aprons, and rubber boots with nonslip soles. Rubber boots and aprons are only needed when you are refilling batteries. You should wear eyeshields whenever you are working around batteries. Eyeshields will prevent acid burns to your eyes. Wood slat floorboards, in good condition, will help prevent slips and falls. Additionally, electric shock from the high-voltage side of charging equipment is reduced.

Another hazard of working with batteries is the chance of an explosion. Hydrogen gas, a high explosive, collects while batteries are charging and can cause an explosion during battery charging. This is especially true when using the accelerated charging method. The charging rate should be held to a point that prevents the rapid release of hydrogen gas. Follow the manufacturers' recommendations for the charging rates. Be careful to prevent short circuits while batteries are being charged, tested, or handled. A spark from a shorted circuit could easily ignite the explosive gases. This danger is also true for personnel performing aircraft maintenance near batteries. Open flames or smoking are not permitted in the battery charging room. Use a shop exhaust system to remove the gases.

Use extreme caution when you are installing or removing an aircraft battery. Batteries are heavy for their size and awkward to handle. These characteristics require the use of proper safety precautions.

Aircraft batteries may overheat because of internal shorting or thermal runaway. In either case, an overheated battery causes a hazardous condition. When an overheated battery is detected, crash crew personnel should open the battery compartment and check for the following conditions:

- Flame—If present, use CO_2 extinguisher.
- No flame—If smoke, fumes, or electrolyte is coming from the battery or vent tubes, spray the battery with low-velocity water fog. This will lower the battery temperature.

WARNING

CO_2 is a good fire-extinguishing agent once a fire has started. Never spray CO_2 from a portable fire extinguisher into a battery compartment for cooling or to displace explosive gases. The static electricity generated by the discharge of the extinguisher could explode the gases trapped in the battery compartment.

Following a visual check, allow crash crew personnel to remove the battery. If additional battery cooling is required, use low-velocity water fog.

You may use the above procedures on all types of aircraft batteries installed in all types of aircraft.

CAUTION

If acid or electrolyte from a lead-acid battery touches your skin or eyes, flush the affected area with large quantities of fresh water. Report immediately for medical examination and treatment.

CAUTION

If the electrolyte from a nickel-cadmium (NICAD) battery touches your skin or eyes, flush the affected area thoroughly with large quantities of fresh water. Neutralize with vinegar or a weak solution (3%) of boric acid. Report immediately for medical examination and treatment.

Q7-1. What are the two primary sources of electrical energy for an aircraft?

Q7-2. During normal aircraft operation, what component maintains the battery in a charged state?

Q7-3. What are the principal hazards of working with batteries?

Q7-4. What can cause aircraft batteries to overheat?

Q7-5. What should you do if acid or electrolyte from a lead acid battery comes in contact with your skin?

Q7-6. What are the two ways to neutralize electrolyte from a nickel-cadmium (NICAD) battery if it contacts your skin?

ALTERNATING CURRENT (AC) SYSTEMS

LEARNING OBJECTIVES: Identify the basic purpose and operating principles for aircraft ac electrical systems. Identify the purpose of gyroscopes. Identify navigational instruments and recognize their purpose.

As you just learned, energy for operating most electrical equipment in an aircraft depends primarily on energy supplied by a generator. A generator converts mechanical energy into electrical energy. Generators that produce ac are called *ac generators* or *alternators*. Most naval aircraft use ac electrical systems as the primary source of power. Most equipment aboard is ac powered. The few requirements that remain for direct current (dc) are normally supplied by a system of rectifiers. A rectifier converts ac power to dc power. Auxiliary power units (APUs), discussed later in this chapter, provide ground service and emergency power. (See Navy Electricity and Electronics Training Series (NEETS), Module 5, NAVEDTRA 172-05-00-79, for detailed information on the construction and operation of ac generators and motors. Module 5 also discusses the principles of rectification and voltage regulation.)

EMERGENCY ELECTRICAL POWER

For many years, the storage battery was the only source of emergency electrical power. Recent advancements in avionics equipment have caused emergency electrical loads to exceed the capability of storage batteries. Also, the aircraft storage battery with its highly corrosive electrolyte damages precision equipment and precious metals used in today's aircraft. For these reasons, there are new methods of providing emergency electrical power.

EMERGENCY POWER GENERATORS

Many jet aircraft have emergency generators. These generators provide emergency electrical power in the event of main electrical power failure.

In some aircraft, a power package positioned outside the aircraft provides emergency electrical power. When required, the pilot operates a lever that causes the package to stick out into the airflow. The ram-air effect of the airflow provides the turning power for a turbine. The turbine, in turn, rotates the generator's armature (fig. 7-2) that produces the electrical power.

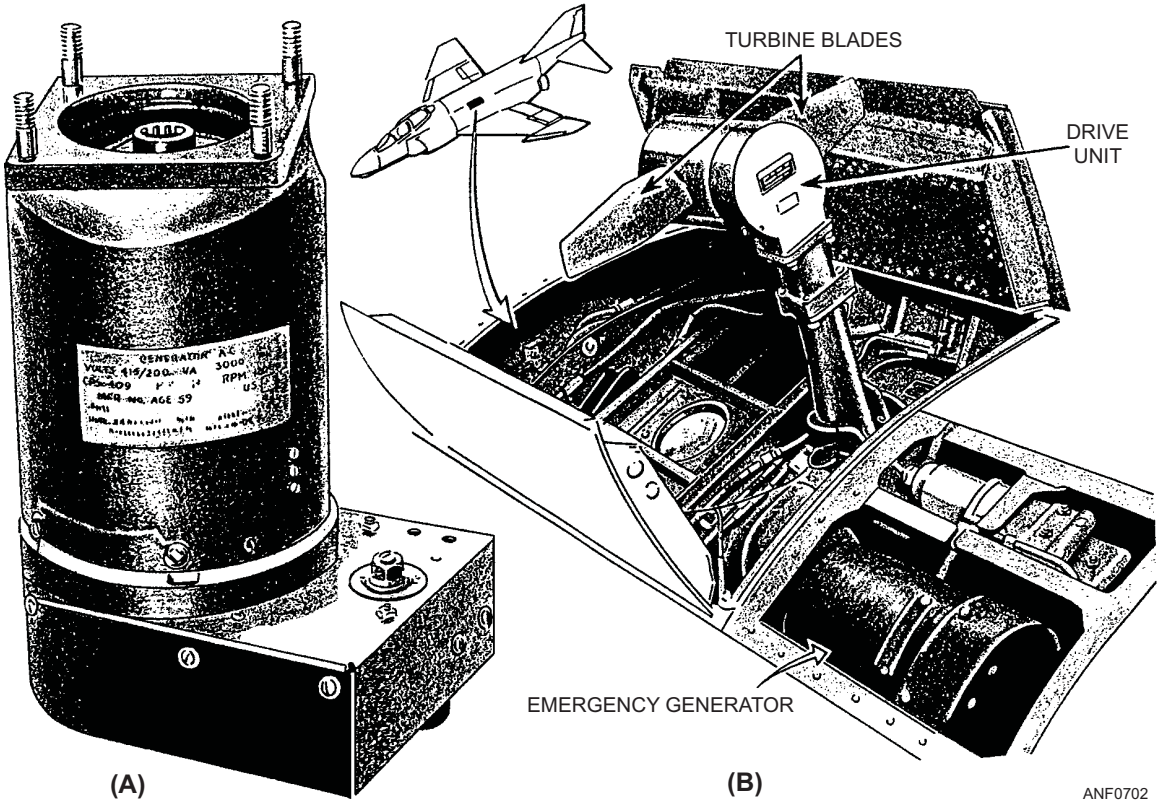

Figure 7-2.—(A) Emergency generator; (B) emergency generator installation.

AIRBORNE AUXILIARY POWER UNITS (APU)

Most larger aircraft use APUs. These power units furnish electrical power when engine-driven generators are not operating or when external power is not available. The power output from the APU supplies a constant voltage at a constant frequency. The APU does not depend on engine rpm.

Most units use a gas turbine (fig. 7-3) to drive the generator. The gas turbine provides compressed air for air conditioning and pneumatic engine starting. This makes the aircraft independent of the need for ground power units to carry out its mission.

CARRIER AIRCRAFT ELECTRICAL POWER SERVICING SYSTEM

The deck-edge electrical power system on aircraft carriers provides servicing power to aircraft. Twenty-eight volt dc power is supplied by rectified ac or by motor-generators. Ac generators usually supply the 400-hertz, three-phase, ac servicing voltage. Figure 7-4 shows an electrical power service system found on modern carriers. Power is supplied by service outlets located at the edge of the flight deck or from recesses in the flight deck. Additionally, receptacles are located throughout the hanger bay. All systems have standard remote control switches, service outlet boxes, and

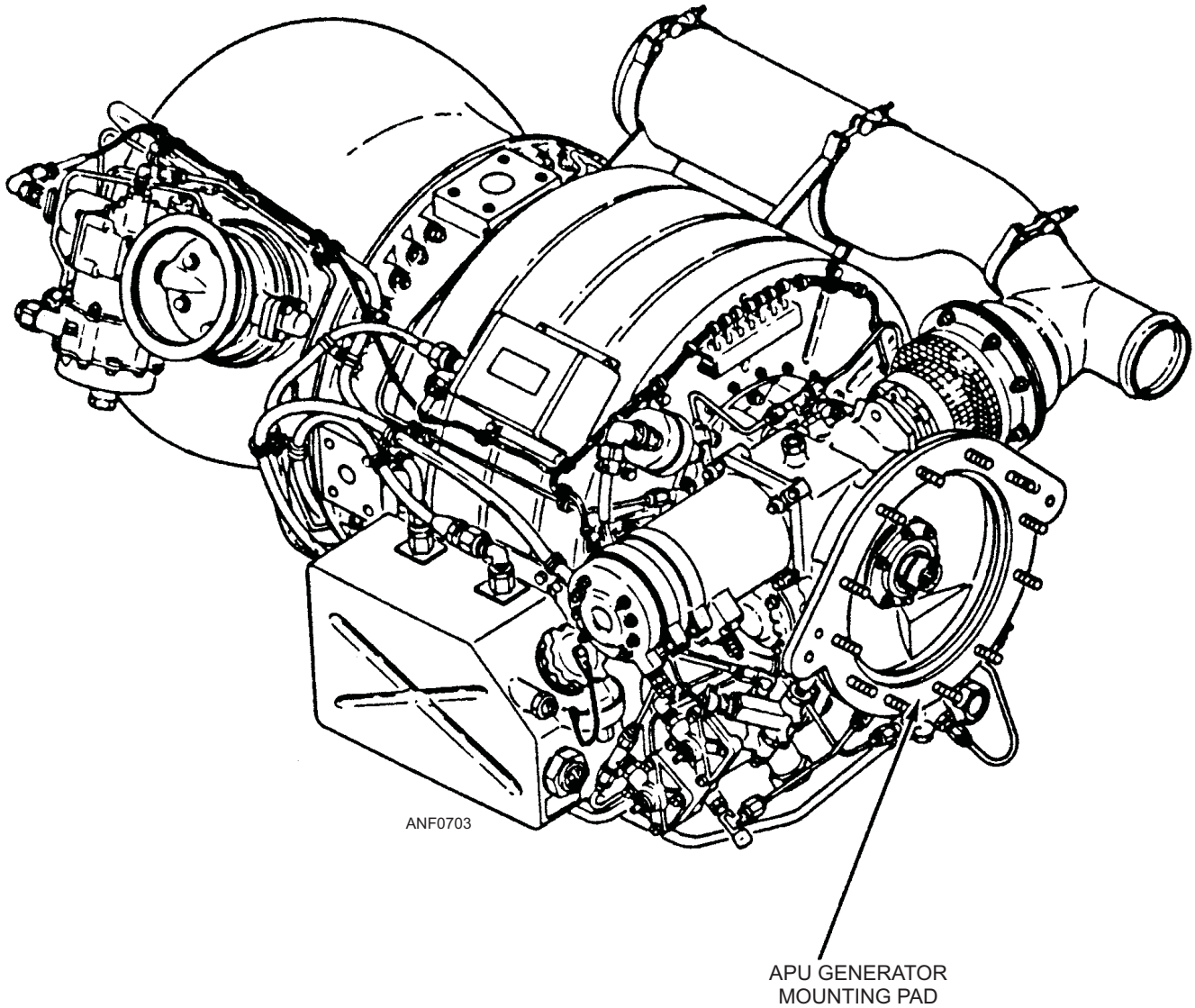

Figure 7-3.—Gas turbine power plant unit.

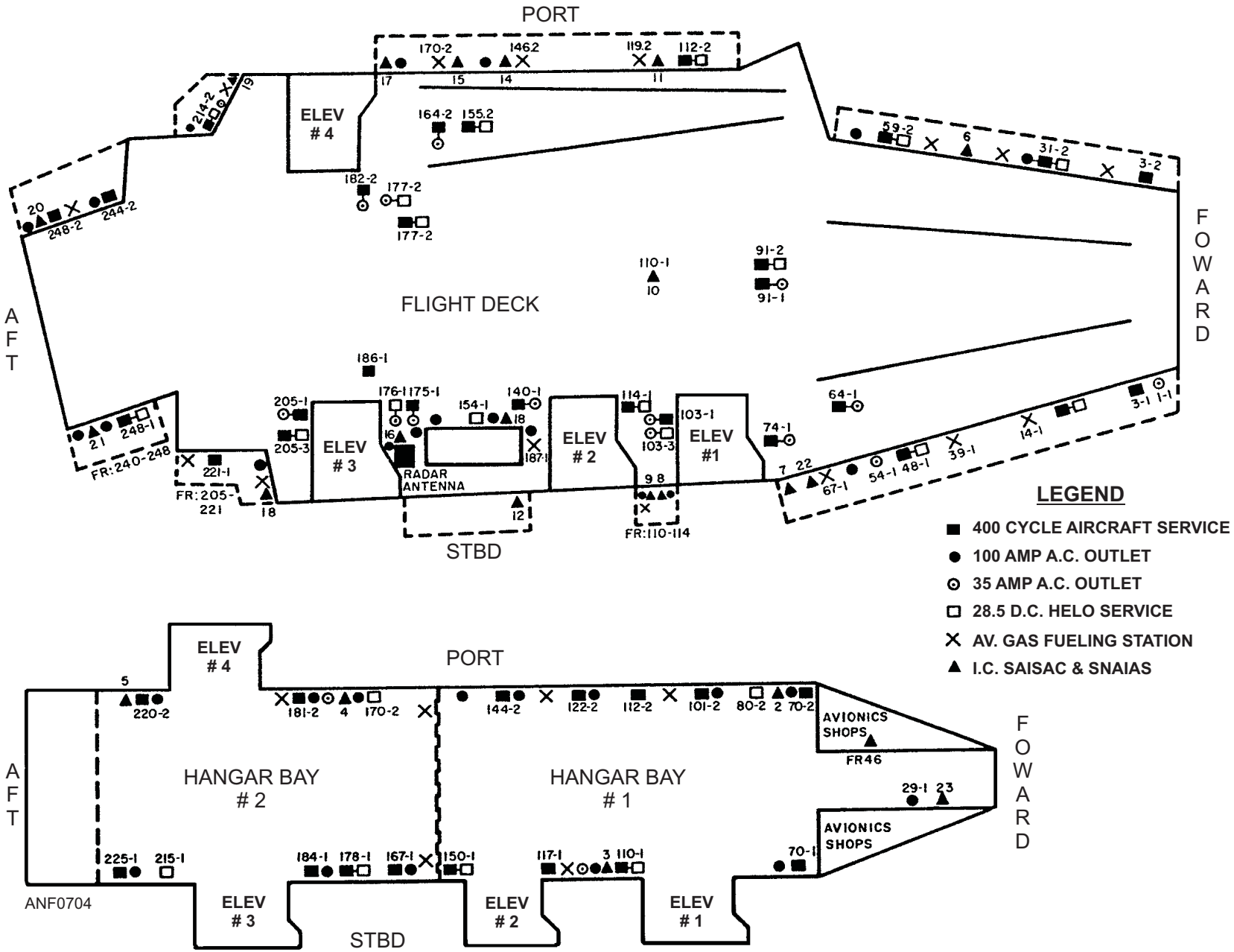

Figure 7-4.—Carrier aircraft servicing system.

power cables. Figure 7-5 shows typical deck-edge electrical installations.

The dc service cable is oval-shaped and contains three female pins that mate to male pins on the aircraft. The ac service cable is rectangular-shaped and contains six female pins that mate to male pins on the aircraft.

Use the following safety precautions when you work with deck-edge electrical power systems:

- Use care when you are connecting the heavy cables to the aircraft. Damage to the aircraft power receptacles may result if too little slack is left in the cables.
- Be sure that the remote switches are turned off prior to connecting or disconnecting service cables to the aircraft.
- The flush deck outlets often get water in them because of rain or heavy seas. Do not use these outlets if water is present. You will get shocked.

PITOT-STATIC SYSTEM

The Aviation Electrician's Mate (AE) rating maintains the pitot-static system and most aircraft instruments. The pitot-static system in an aircraft includes some of the instruments that operate on the principle of the barometer. It consists of a pitot-static tube and three indicators, all connected with tubing that carries air. The three indicators are the altimeter, the airspeed and Mach number indicator, and the rate-of-climb indicator. The airspeed indicator displays the speed of the aircraft. The altimeter displays the altitude of the aircraft. The rate-of-climb indicator shows how fast the aircraft is climbing or descending. Each instrument operates on air taken from outside the aircraft during flight. The relationship between the pitot-static tube, the airspeed indicator, the altimeter, and the rate-of-climb indicator is shown in figure 7-6.

The pitot tube is mounted on the outside of the aircraft at a point where the air is least likely to be turbulent. It points in a forward direction parallel to the aircraft's line of flight. One general type of airspeed tube mounts on a mast extending below the nose of the fuselage. Another is on a boom extending forward of the leading edge of the wing. Although there is a slight difference in their construction, their operation is the same.

Static means stationary or not changing. The static port introduces outside air, at its normal outside atmospheric pressure, as though the aircraft were standing still in the air. The static line applies this outside air to the airspeed indicator, the altimeter, and the rate-of-climb indicator.

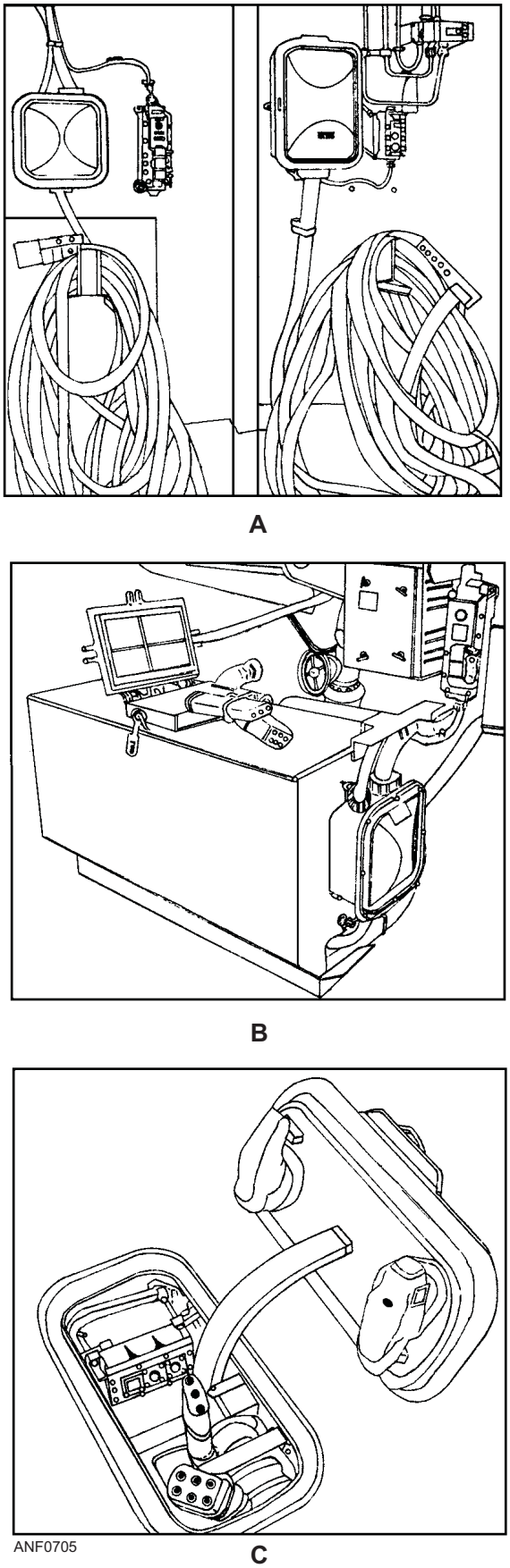

Figure 7-5.—Typical deck-edge electrical installations. (A) Hangar deck; (B) catwalk; (C) flush deck.

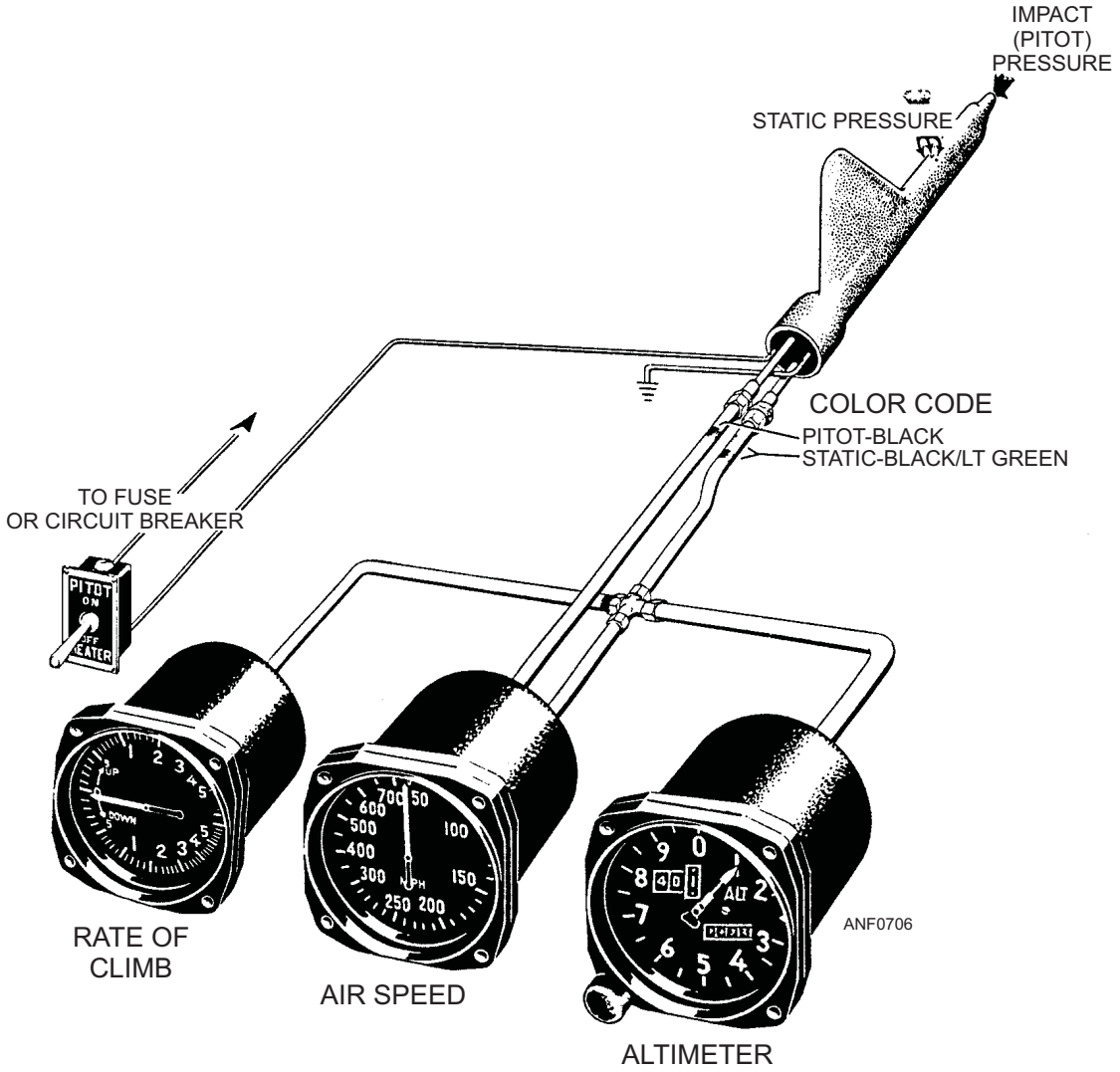

Figure 7-6.—Pressure measuring instruments.

The tube or line from the pitot tube to the airspeed indicator applies the pressure of the outside air to the indicator. The indicator is calibrated so various air pressures cause different readings on the dial. The indicator interprets air pressure from the pitot tube and reflects airspeed in knots.

When working on or around the pitot tube or static ports, do not obstruct the openings. Obstructed openings restrict the supply of air to the indicators and cause false readings.

> **CAUTION**
>
> Severe burns may result from touching a pitot tube with the pitot tube heaters on. Be sure the pitot tube heaters are off before installing protective covers.

Altimeter

The altimeter (fig. 7-7) shows the height of the aircraft above sea level. The face of the instrument is calibrated so the counter/pointer displays the correct altitude of the aircraft.

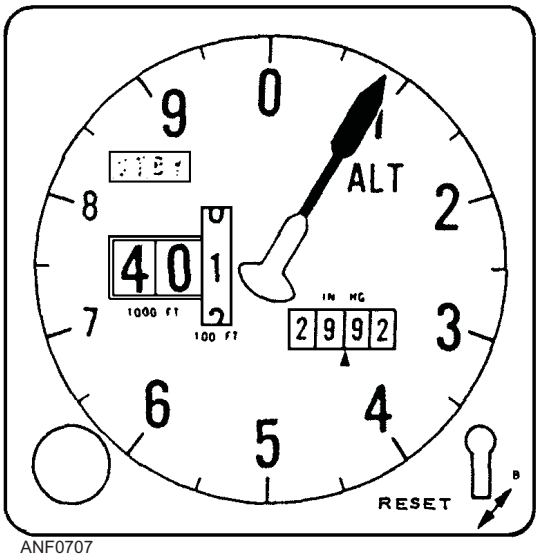

Figure 7-7.—Counter/pointer altimeter.

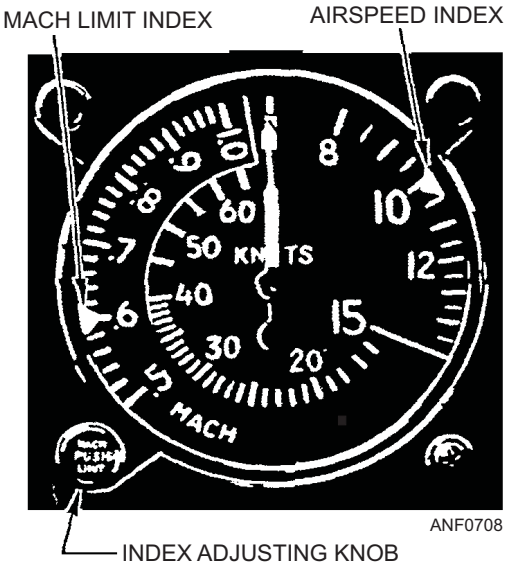

Figure 7-8.—Airspeed and Mach number indicator.

Airspeed and Mach Number Indicator

The airspeed and mach number indicator (fig. 7-8) displays the speed of the aircraft in relation to the air in which it is flying. In some instances, the speed of an aircraft is shown in Mach numbers. The Mach number of any moving body is its speed compared to the speed of sound in the surrounding medium (local speed). For example, if an aircraft is flying at a speed equal to one-half the local speed of sound, it is flying at Mach 0.5. If it moves at twice the local speed of sound, its speed is at Mach 2.

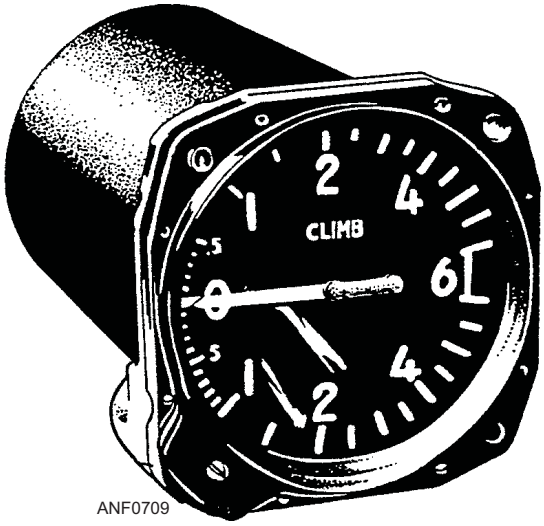

Figure 7-9.—Rate-of-climb indicator.

Rate-of-Climb Indicator

The rate-of-climb indicator (fig. 7-9) shows the rate at which an aircraft is climbing or descending. The case of a climb indicator is airtight except for a small connection through a restricted passage to the static line. Changes in atmospheric pressure move the operating mechanism that displays the rate of change. This change occurs only when the aircraft is ascending or descending. When the aircraft ceases to climb or dive, the airflow through the metering units equalizes and the pointer returns to zero.

PRESSURE INDICATING GAUGES

Electrical signals from a pressure transmitter activate a variety of aircraft instrument systems. Electrically activated instruments are usually in the form of small voltmeters with calibrated dials. These dials are calibrated to display a variety of conditions such as oil pressure, fuel pressure, and hydraulic pressure.

Oil Pressure Indicator

Oil pressure instruments (fig. 7-10) show the pressure of the oil. Drops in oil pressure (below normal conditions) signal possible engine failure caused by lack of oil.

Fuel Pressure Indicator

The fuel pressure indicator provides a check on the operation of the fuel system. It shows if fuel is being supplied steadily under the correct operating pressure.

Hydraulic Pressure Indicator

The pressures of hydraulic systems vary for different models of aircraft. In most pressure systems,

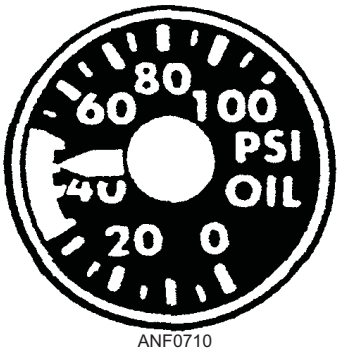

Figure 7-10.—Oil pressure indicator.

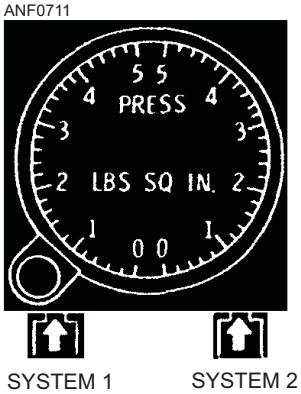

Figure 7-11.—Hydraulic pressure indicator.

Figure 7-12.—Turbine inlet temperature indicator.

the gauges register from 0 to 3,000 psi. Figure 7-11 shows the hydraulic pressure indicator of a late model naval aircraft. The indicator provides a continuous pressure reading on the number 1 and number 2 flight control systems. The pressure indicator contains two synchros mechanically attached to two separate pointers. The pointers show the pressure in each system.

ENGINE INSTRUMENTS

To properly operate an aircraft, the pilot must monitor many engine instruments. Among these are temperature indicators, the tachometer, the fuel quantity indicator, and the vertical scale indicator.

Turbine Inlet Temperature Indicator

A turbine inlet temperature indicator (fig. 7-12) provides a visual display of the temperature of gases entering the turbine. Dual-unit thermocouples installed in the inlet casing measure the temperature of each inlet. The indicator scale is calibrated in degrees Celsius (°C) from 0 to 12 (times 100). The digital indicator reads from 0 to 1,200°C, in 2-degree increments.

Exhaust Gas Temperature Indicator

The exhaust gas temperature indicator provides a visual display of the engine's exhaust gases as they leave the turbine unit. A typical exhaust gas temperature indicating system for a modern naval jet aircraft is shown in figure 7-13.

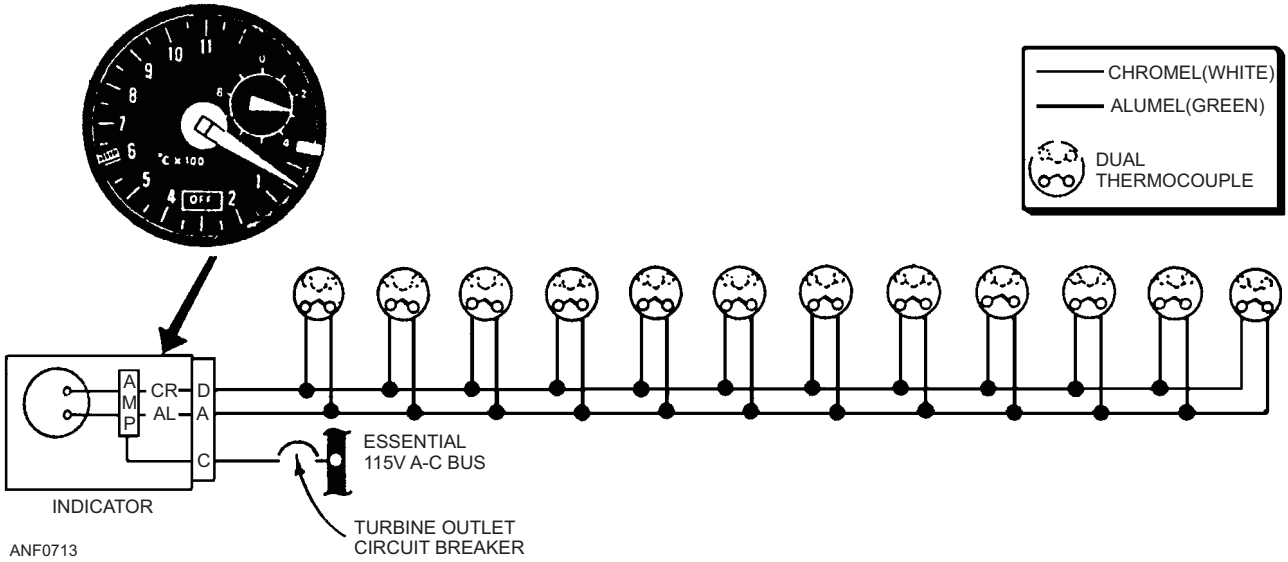

Figure 7-13.—Exhaust gas temperature indicating system.

Tachometer

The tachometer (fig. 7-14) is an instrument for showing the speed of the power section of a gas turbine engine. A small alternator or generator attached to the engine's accessory section produces a voltage proportional to the speed of the power section. This voltage powers the pointer on the tachometer and registers the percent of rpm being developed.

A dual tachometer is used in turbojet and multiengine aircraft.

Fuel Quantity Indicator

The fuel quantity indicator (fig. 7-15) is a capacitor-type gauge system. An electronic fuel-measuring device displays fuel quantity in pounds. The dial of the indicator is calibrated from 0 to 6 (times 1,000) with line increments every 100 pounds.

Vertical Scale Indicator

On most new model naval aircraft, radial dial indicators have been replaced by vertical scale indicators. The vertical scale indicator is used to show engine performance data, fuel flow, engine speed, exhaust gas temperatures, and accelerometer readings. Vertical scale indicators are compact, lightweight, and easily read. Figure 7-16 shows a few examples of the vertical scale indicators now in use.

GYROSCOPES

If not for using the properties of a spinning wheel, precise navigation and instrument flying would be very difficult. Two very important instruments that use the properties of a gyroscope are the attitude indicator and the turn and bank indicator.

Attitude Indicator

A pilot determines aircraft attitude by referring to the horizon. Often, the horizon is not visible. When it is dark, overcast, smoky, or dusty, you cannot see to use the earth's horizon as a reference. When one or more of these conditions exists, the pilot refers to the attitude indicator. The attitude indicator is also known as a *vertical gyro indicator (VGI), artificial horizon, or gyro horizon*. Attitude indicators show the pilot the relative position of the aircraft compared to the earth's horizon.

Attitude indicators may be different in size and appearance, but they all have the same components and present the same basic information. As shown in figure 7-17, a miniature aircraft represents the nose (pitch) and wing (bank) attitude of the aircraft with respect to the earth's horizon. A band on the face of the indicator shows the degree of bank. The sphere is shaded light on the upper half and dark on the lower half to show the difference between sky and ground. The calibration marks on the sphere show degrees of pitch. Each indicator has a pitch trim adjustment so the pilot can center the horizon as necessary.

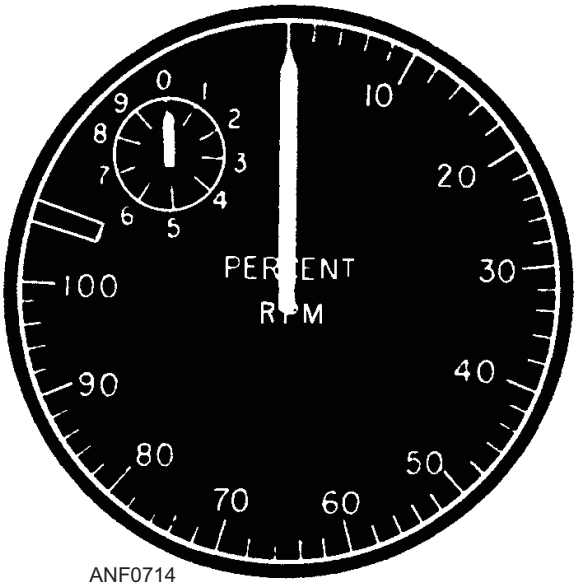

Figure 7-14.—Tachometer, jet engine type.

Figure 7-15.—Fuel quantity indicator.

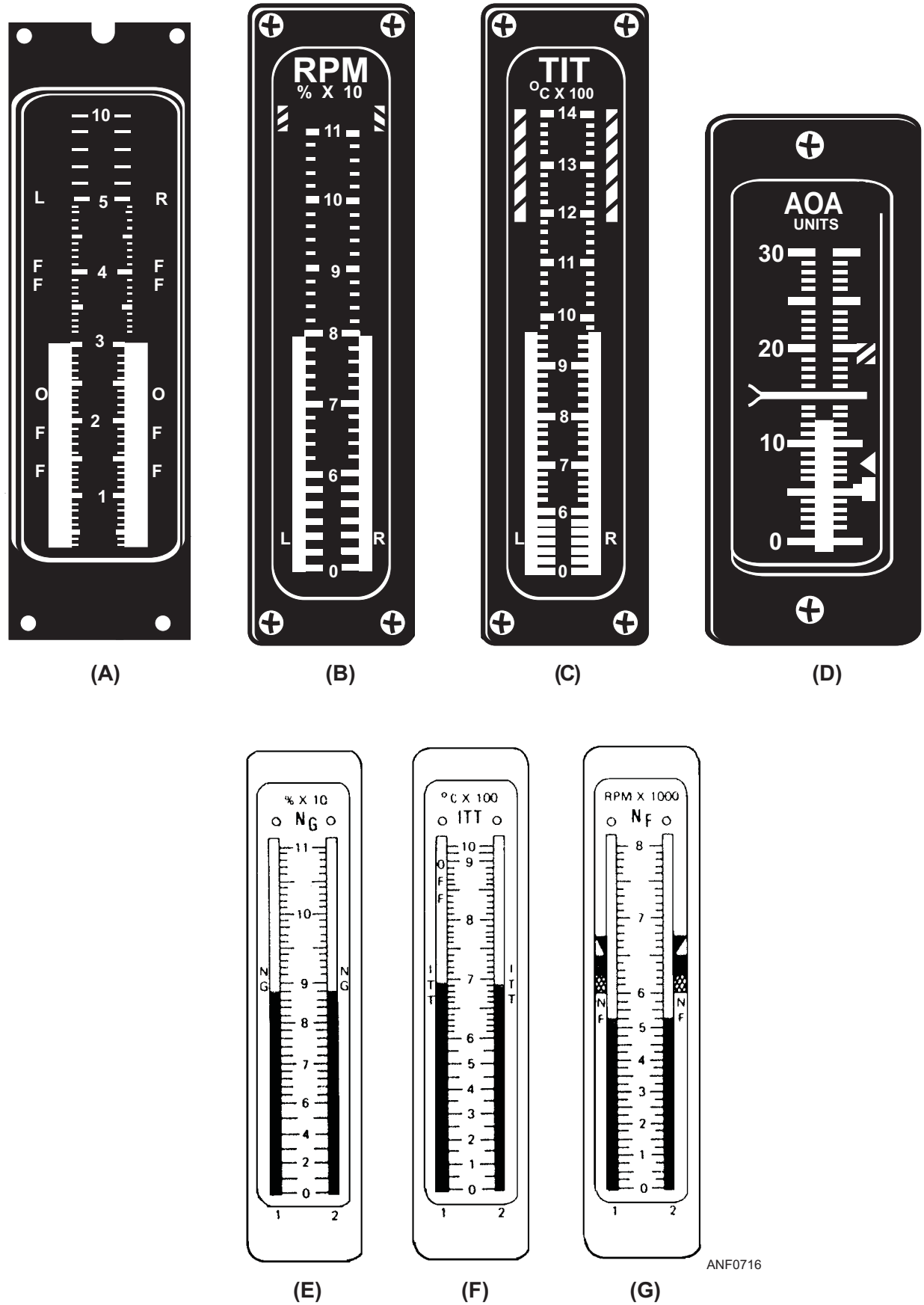

Figure 7-16.—Vertical scale indicators. (A) Fuel flow indicator; (B) tachometer rpm indiator; (C) turbine inlet temperature indicator; (D) angle-of-attack indicator; (E) gas generator speed indicator; (F) interturbine temperature indicator; (G) fan speed indicator.

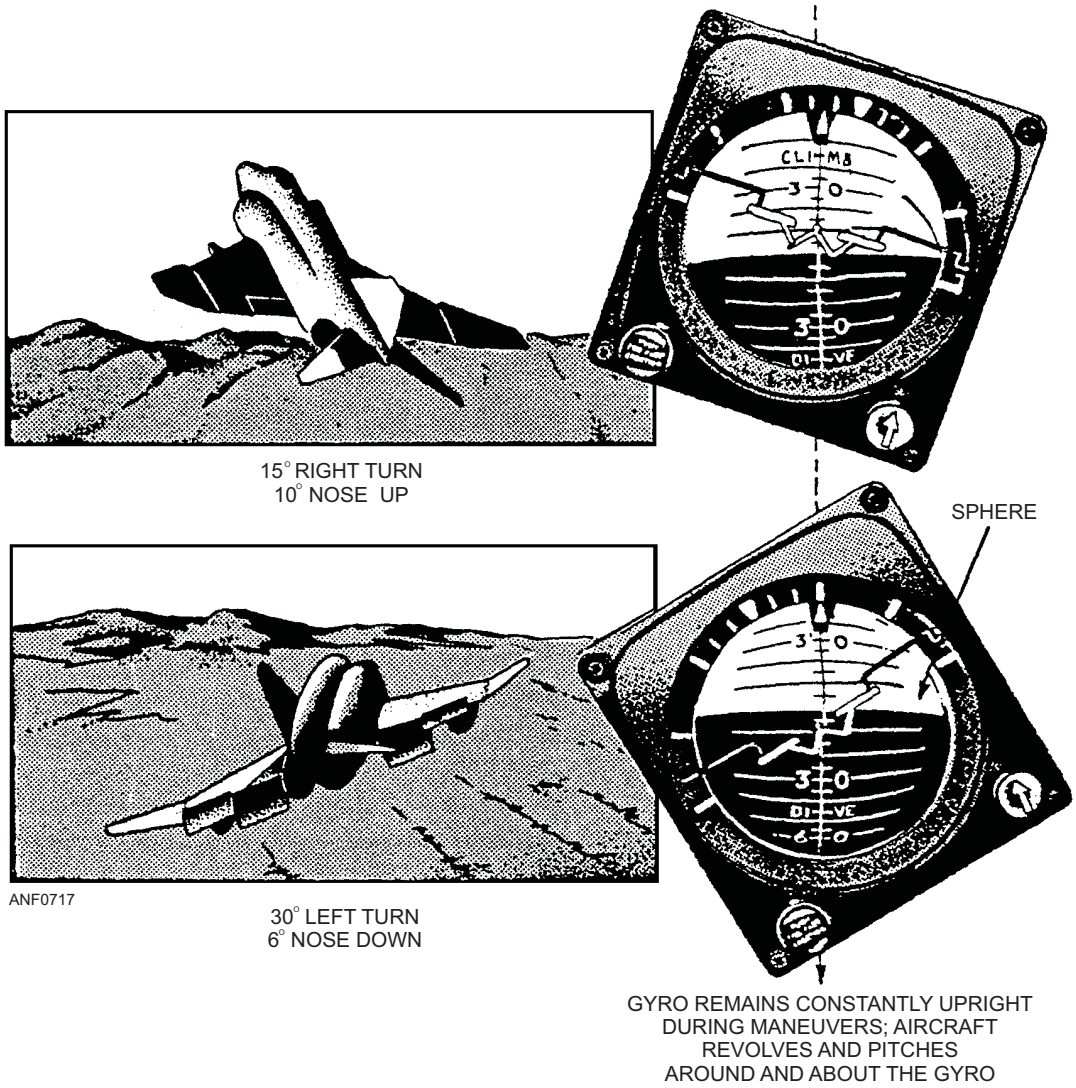

Figure 7-17.—Roll and pitch indications.

Turn and Bank Indicator

The turn and bank indicator (fig. 7-18) shows the correct execution of a turn and bank. It also shows the lateral attitude of the aircraft in straight flight.

A turn and bank indicator is really two instruments mounted as a single unit. The turn indicator is a gyro mounted in a frame that is pivoted to turn on a longitudinal axis. The direction of a turn is shown on the dial by a pointer. The distance the pointer moves to the right or left is proportional to the rate of the turn.

The other half of the instrument, the bank indicator, is not a gyro instrument. It consists of a glass ball that moves in a curved glass tube filled with a liquid, consisting of 50% alcohol and 50% glycerin. The tube

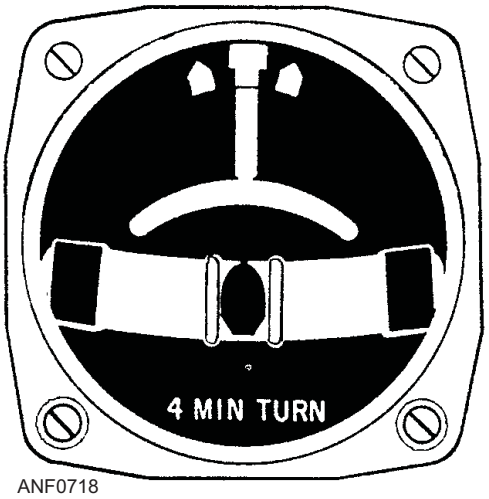

Figure 7-18.—Turn and bank indicator.

is mounted horizontally below the center of the dial, as shown in figure 7-18.

When the pilot is executing a properly banked turn, the ball stays in the center position. If the ball moves from the center position, it shows the aircraft is slipping to the inside or the outside of the turn. Centrifugal force and gravity determine the position in which the ball rests.

NAVIGATIONAL INSTRUMENTS

The following navigational instruments direct, plot, and control the course or position of aircraft.

Magnetic (Standby) Compass

A direct-reading magnetic compass (fig. 7-19) is mounted on the instrument panel. The face of the compass is read like the dial of a gauge.

Gyro Compass

The gyro compass is used in many naval aircraft. The system provides an accurate indication of aircraft headings through 360° of azimuth.

Horizontal Situation Indicator

The newest naval aircraft use the horizontal situation indicator (fig. 7-20). It shows the pilot the navigational situation of the aircraft.

Q7-7. Generators that produce alternating current (ac) for aircraft are known as what type of generators?

Q7-8. Most naval aircraft use what type of system as their primary source of power?

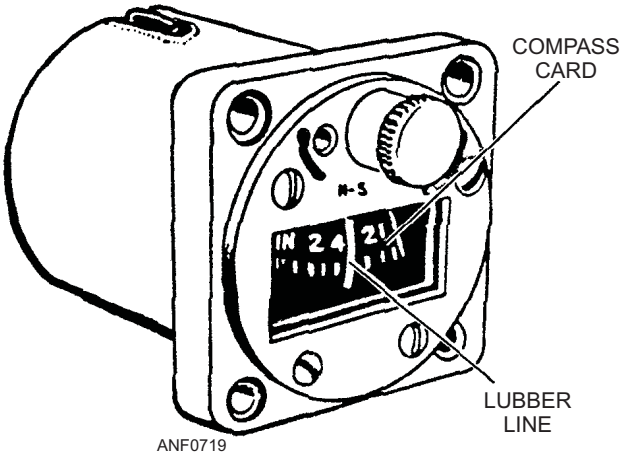

Figure 7-19.—Magnetic (standby) compass.

Q7-9. What is the purpose of airborne auxiliary power units (APUs)?

Q7-10. The pitot-static consists of a pitot-static tube and three indicators. What are the three indicators?

Q7-11. What is the function of the altimeter?

Q7-12. Define the Mach number of any moving body.

Q7-13. What information does the attitude indicator provide to the pilot?

Q7-14. What information does the turn and bank indicator provide to the pilot?

Q7-15. What are the three navigational instruments that direct, plot, and control the course or position of an aircraft?

COMMUNICATIONS AND NAVIGATION EQUIPMENT

LEARNING OBJECTIVES: Recognize the general characteristics and uses of communications and navigation equipment. Identify the basic purposes of navigational systems and equipment to include TACAN, Global Positioning System (GPS), and navigation computer systems.

This section presents information on airborne uses of radio communications and navigation. Radio equipment does not require interconnecting wires between the sending and receiving stations. It is the

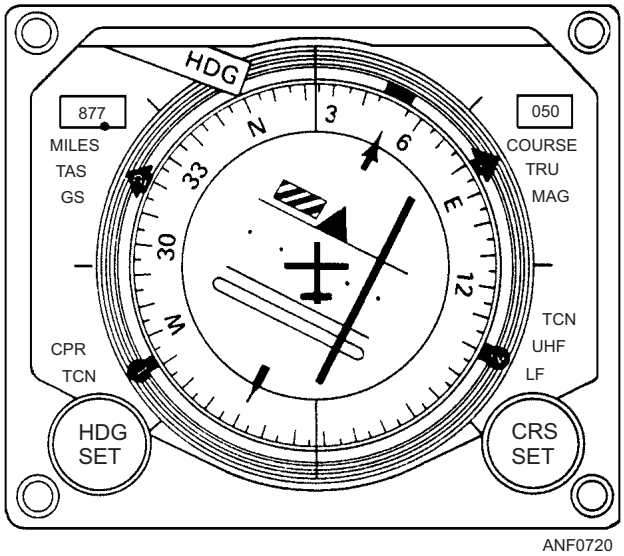

Figure 7-20.—Horizontal situation indicator.

only practical means of communicating with moving vehicles, such as ships or aircraft. Also, radio communication can span great distances in any or all directions. It is the most practical system to use for sending information to many points, as in broadcasting to large numbers of ships or aircraft.

Modern aircraft use radio equipment as navigational aids. Navigation aids consist of many types and are of varying complexity. They range from simple radio direction finders to complex navigational systems. Some systems use computers and other advanced electronic equipment to solve navigational problems automatically. The Aviation Electronics Technician (AT) rating normally maintains communications and navigational equipment.

AIRBORNE COMMUNICATIONS EQUIPMENT

Several means of radio communications are in use today. Some of these radio communications methods are:

- Radiotelegraphy—The transmission of intelligible coded radio-frequency waves as Morse code.
- Radiotelephony—The transmission of sound intelligence (voice, music, or tones) by continuous radio-frequency waves.
- Radiofacsimile—The transmission of still images (weather maps, photographs, sketches, and so forth) over a radio-frequency channel.
- Radioteletype—The transmission of typewritten messages over a radio-frequency channel.
- Radiotelevision—The transmission of a rapid succession of images (still or moving) over a radio-frequency channel.

Airborne communications equipment usually consists of equipment that can use either or both radiotelegraphy or radiotelephony. Radiotelegraphy and radiotelephony are called Morse code and continuous wave (CW) voice communications, respectively.

Long-range Communications

Airborne long-range communications sets normally operate in a band of frequencies from about 3 MHz to 30 MHz. Frequencies within this band are called the HF or high-frequency band. Radio frequencies within this band have characteristics that make them highly useful. The radiated waves transmitted along the surface of the earth bend around objects in its path. In addition, radio waves that are transmitted skyward bounce off the ionosphere and return to earth at extreme distances from the transmitting station. This allows the waves to travel extremely long distances.

Most long-range communications sets are designed for both voice and CW (Morse code) operation. It is often necessary to have a long antenna for long-range communications. A weighted antenna wire (trailing wire antenna) is installed in some large aircraft. The wire is reeled out to provide an antenna of the desired length.

Short-range Communications

Short-range airborne communications sets operate in the frequency range from about 30 MHz to 3 GHz. The lower portion of this band is the very-high-frequency (VHF) band; the higher portion is the ultra-high-frequency (UHF) band. The VHF/UHF frequency bands have transmission characteristics that differ from those frequencies in the HF band. Radio waves transmitted at these frequencies travel in a straight line. This limits the transmission to line-of-sight. VHF/UHF communications sets are called line-of-sight communications sets. Radio waves at these frequencies normally do not return to earth. Therefore, VHF/UHF transceivers are mainly used for air-to-air and air-to-ground contact in close range operations. Landings and takeoffs are typical situations using air-to-ground VHF/UHF transmissions.

Special situations exist where VHF/UHF equipment is involved in long-distance communications. An example of this is the network of remote-controlled transceivers installed along the airways system in the United States. Pilots of aircraft traveling the airways can talk directly to controllers in distant aviation activities. A system of telephone lines and relay stations connect the remote transceiver sites. The radio part of the transmission takes place over a relatively short distance.

NAVIGATIONAL EQUIPMENT

Modern naval aircraft use a lot of navigational equipment. Radio receivers and transmitters are used to handle signals that determine bearing and/or distance. The tactical air navigation (TACAN) system, Global Positioning system (GPS), and navigation computer systems are discussed briefly in the following paragraphs.

Tactical Air Navigation (TACAN) System

TACAN is a radio navigational set that provides slant range and relative bearing to a transmitting ground (surface) station. It has Distance Measuring Equipment (DME) that provides continuous slant range information. The Bearing Distance Heading Indicator (BDHI) provides a visual indication of the navigational situation for that aircraft.

Global Positioning System (GPS)

The Global Positioning System (GPS) is a space-based radio position and navigation system designed to provide highly accurate three-dimensional position, velocity, and time data to suitably equipped aircraft anywhere on or near the earth. The Satellite Vehicle (SV) consists of 24 operational satellites in six circular orbits (10,900 nmi) above the earth at an inclination angle of 55° with a 12-hour period. The satellites are spaced in orbit so that at any given time a minimum of four satellites will be in view to users anywhere in the world.

The GPS Navigation Set receives and processes SV signals, combines them with air data information, and then calculates and displays the aircraft position for navigation. The information includes present aircraft position, course information, distance and time to waypoint and desired track, along with other navigation information. GPS consists of three independent segments—the satellite segment, ground segment, and the user segment.

Navigation Computers

A new and complex group of electronic navigational equipment is now in use in naval aviation. This equipment does not use a radio receiver as the basic component. Included in this group are navigational computers, Doppler navigation equipment, and inertial navigation equipment.

NAVIGATIONAL COMPUTERS.—One of the navigational aids now in use is a latitude and longitude type of airborne computer system. This system can make the following computations during flight:

- The latitude and longitude of the present position of the aircraft. This information is continually displayed on the pilot's console.
- The aircraft ground track angle, relative to true heading.
- The distance from the present position of the aircraft to a preset target or base, as selected on the control panel.
- The bearing of the preset target or base, as selected, relative to true heading.

The computer is an analog-type computer. It includes a group of servomechanisms that receive navigational information and, by solving trigonometric equations, produces output information. Data input consists of the following:

- Compass heading
- True airspeed
- Magnetic variation
- Windspeed
- Base position latitude and longitude (usually the starting position)
- Target position latitude and longitude
- Aircraft's latitude and longitude (if not identical to base)

The magnetic compass and the true airspeed transmitter automatically furnish compass heading and true airspeed. The remaining inputs are set manually by control knobs on the counter-control panel. The computer sections continuously reposition the POSITION-LATITUDE and LONGITUDE counters to show the aircraft's present position and/or the intended target's position.

DOPPLER NAVIGATION EQUIPMENT.—Doppler navigation is based on a radar wave transmission beamed toward the earth behind the aircraft. This radar does not sense range and bearing (direction) as ordinary search radar does. Instead it uses a continuous wave (CW) transmission to measure the ground-speed and drift angle of the aircraft. The Doppler navigation system operates anywhere. It is relatively unaffected by weather conditions, and is independent of ground-based navigation aids. This permits an aircraft crew to compute an aircraft's track. The track is projected on the ground from any known position (usually the position of takeoff) to any position desired. Therefore, long-distance navigation is possible.

INERTIAL NAVIGATION EQUIPMENT.—An inertial navigation system (INS) is an automatic aid to navigation that is independent of outside references. An INS is a portion of the overall tactical system that provides accurate velocity, attitude, and heading data to a digital data processing system. This overall system permits accurate weapons delivery. To function properly, the system must be aligned with reference to initial conditions of altitude, latitude, and longitude.

The aircraft gyros, accelerometers, synchros, servos, and computers continually monitor aircraft heading, attitude, and horizontal and vertical velocities. Any change in the aircraft's latitude, longitude, or altitude involves a change in its speed or direction of motion. The inertia of extremely sensitive accelerometers resists these changes. This resistance is measured and recorded by the synchros, servos, and computers. The computers continually recalculate the movement of the aircraft based on the latest changes recorded by the accelerometers. The computers use these calculations to provide a constantly updated readout of the aircraft's geographical position. When used with Doppler radar, an INS greatly improves overall system accuracy.

Q7-16. Define the radio communication method known as "radiotelegraphy."

Q7-17. Define the radio communication method known as "radiotelephony."

Q7-18. Airborne long-range communications sets normally operate in a band of what frequency range?

Q7-19. Airborne short-range communications sets operate in what frequency range?

Q7-20. What is the primary navigational aid used by the Navy for carrier-based aircraft?

Q7-21. The Global Positioning System (GPS) is a space-based radio position and navigation system designed to provide what type of information?

Q7-22. The GPS Satellite Vehicle consists of how many operational satellites?

Q7-23. Doppler radar uses what type of transmission to measure the ground speed and drift angle of the aircraft?

RADAR

LEARNING OBJECTIVE: Recognize the operating principles, types, and uses of radar.

The acronym *radar* means RAdio Detection And Ranging. Radar is a radio device used to detect objects at distances much greater than is visually possible. Detectable objects include aircraft, ships, land areas, clouds, and storms. In addition to detecting these objects, the radar shows their range and relative position.

Radar was shrouded in secrecy all through World War II. It was one of our most important offensive and defensive weapons systems. Today, radar is used in most types of aircraft, and plays a major role in the mission of naval aviation. Modern developments have led to many specialized types of radar; however, the basic principle upon which it functions is simply echo waves.

ECHO PRINCIPLES

Radar works on the echo principle, as shown in figure 7-21. If a person shouts toward a cliff, in a few seconds the voice returns as an echo. If a radio wave is sent towards a cliff from a radio transmitter through an antenna, it would echo and return to be picked up through the antenna and sent to the radio receiver.

Sound waves travel about 1,100 feet per second, while radio waves travel at the speed of light (about

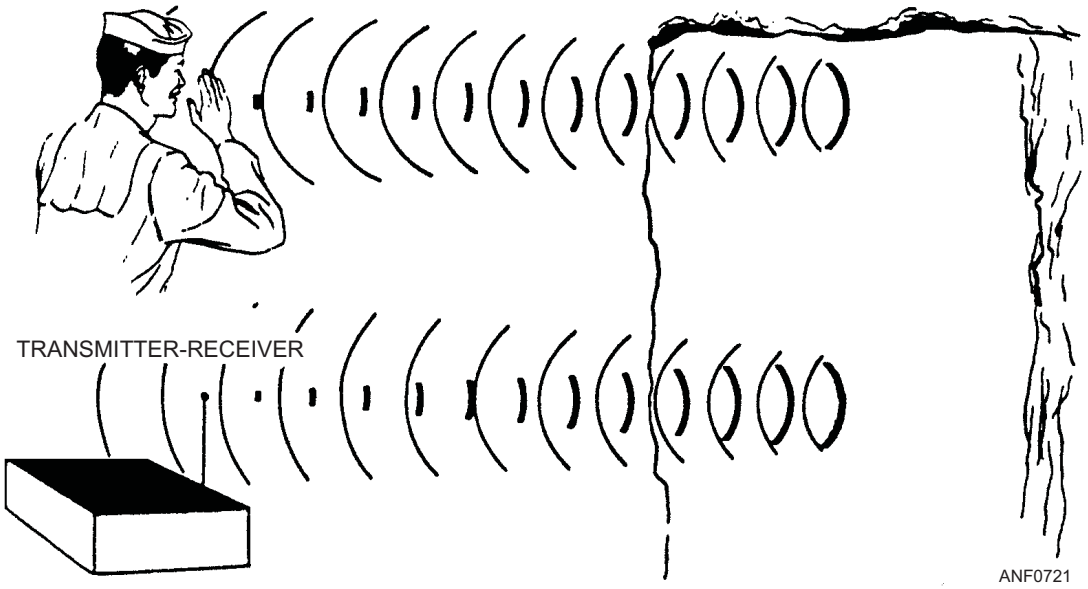

Figure 7-21.—Reflection of sound and radio waves.

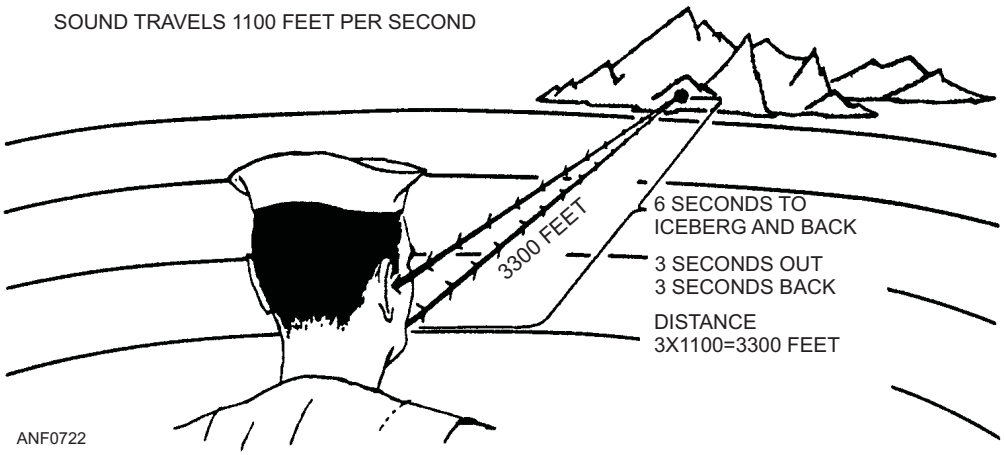

Figure 7-22.—Using voice echo to measure distance.

186,000 miles per second). By knowing the speeds of these waves and the time it takes them to return as an echo, you can measure distance.

Voice echo has been used to measure distance across canyons and the distance of icebergs from ships, as shown in figure 7-22. If it requires 6 seconds for a sound wave to reach an iceberg and return, the total distance traveled by the wave is 6,600 feet. The actual distance to the iceberg is only 3,300 feet. It requires only one-half the time, or 3 seconds, for the sound to reach the iceberg. Therefore, the iceberg is 1,100 × 3 or 3,300 feet away. Mathematically, the distance to the object is one-half the product of the velocity multiplied by the time in seconds. In this case, the velocity (1,100) is multiplied by the time in seconds (6). This divided by 2 equals 3,300 feet—the distance to the object.

Radar measures the distance to an object in much the same manner as the echo. (See fig. 7-23.) However,

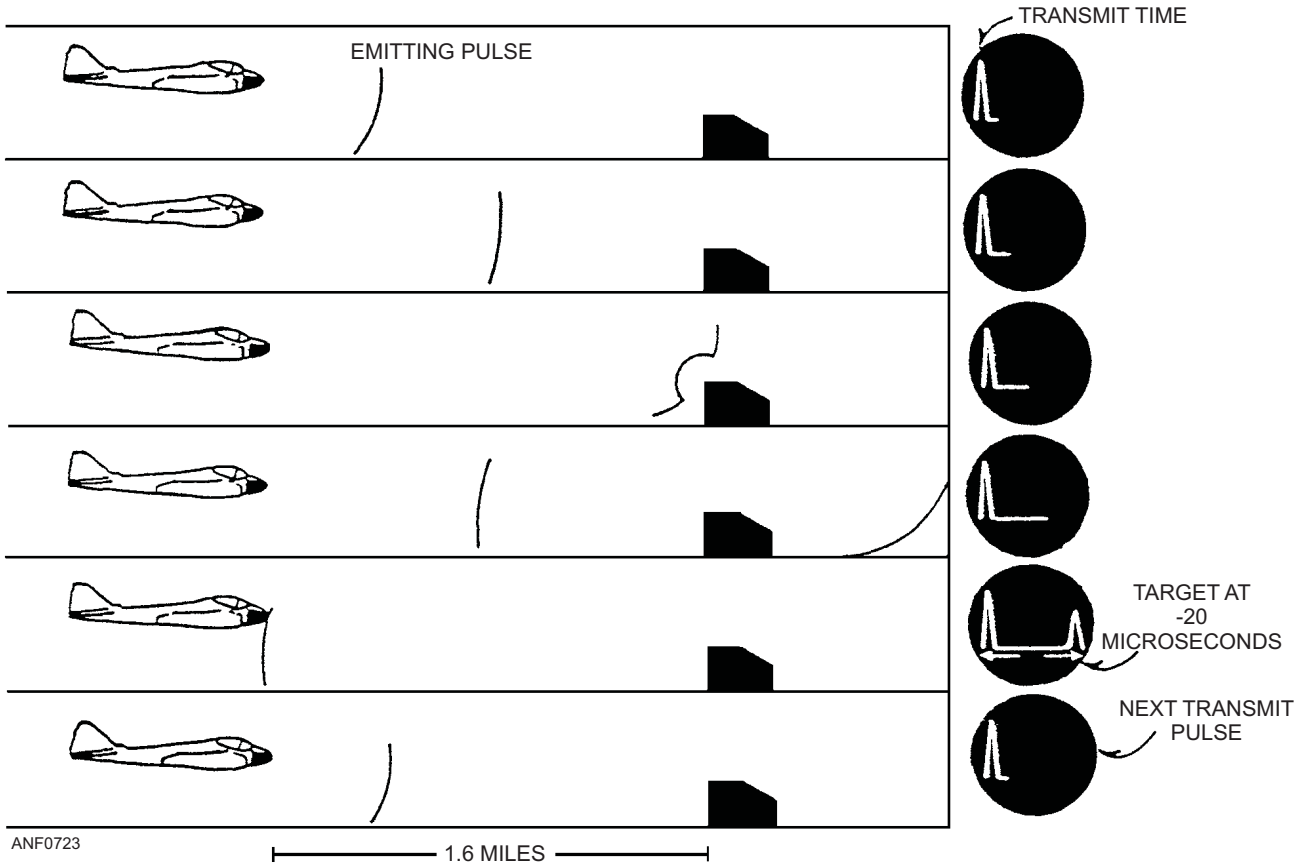

Figure 7-23.—Radar pulse detection.

radio waves travel much faster than sound waves. Radio waves travel about 330 yards in a millionth of a second. Therefore, the times involved in radar ranging are much shorter than for sound ranging.

APPLICATIONS OF RADAR

Radar was originally devised as an instrument to detect approaching ships or aircraft. Practice and experience in reading the scope soon showed that radar could do much more. By plotting successive positions of enemy ships and aircraft, you could determine their course and speed. Further experience made it possible to determine whether the target was a battleship, destroyer, aircraft, or a group of targets. Also, an aircraft's altitude could be determined.

Use in Tactical Air Control

Both airborne and shipboard radar is a major link in an operational system. It directs fighter aircraft to a favorable position for intercepting enemy aircraft. The air control officer can determine the number of fighters so they can successfully attack and destroy the enemy.

Airborne early warning (AEW) aircraft, equipped with high-powered radars, are used in tactical air control. These aircraft extend the range of air control radar by operating in areas outside the range of the shipboard or land-based radar. The Aviation Electronics Technician (AT) rating maintains AEW equipment.

Use in Fire Control

The highly directional characteristics of radar make it suited for directing fire control systems. Focusing the radar energy into a narrow beam enables it to display target position with a high degree of accuracy. At the same time, it also displays target range.

The primary purpose of fire control radar is to determine the correct position and attitude the aircraft should be in to hit the specified target. Radar, in its early stages of development, was useful as an aid to the human eye under poor visibility conditions. It also provided a more accurate and faster means of range measurement. Presently, it provides a faster and more accurate method of directing fire control than is humanly possible. This feature is extremely important considering the high speeds of today's aircraft and missiles. The time available to launch an intercept weapon effectively is measured in fractions of a second.

IDENTIFICATION FRIEND OR FOE (IFF)

The problem of distinguishing friend from foe in warfare has increased because of the increased speed of aircraft and ships. Radar can detect both sea and air targets at long range. However, it displays both friend and enemy similarly on the scope. It is not practical to wait until the target has been visually identified to begin preparing for battle.

A method other than visual recognition must be used for early identification of the target. IFF is an electronic system that allows a friendly craft to identify itself automatically before approaching near enough to threaten the security of other naval units.

A transponder in the friendly aircraft receives a radio-wave challenge (interrogation). The transponder transmits a response to a proper challenge, as shown in figure 7-24. Upon receiving the proper challenge, the transponder automatically transmits a coded reply, which tells the challenger that a friend has been challenged. The transponder stays in a standby condition and transmits only when the proper challenge is received. The challenger's receiver accepts the reply of the challenged target and presents the replies on an indicator.

All operational aircraft and ships of the armed forces carry transponders to give their identity when challenged. For operations involving only friendly

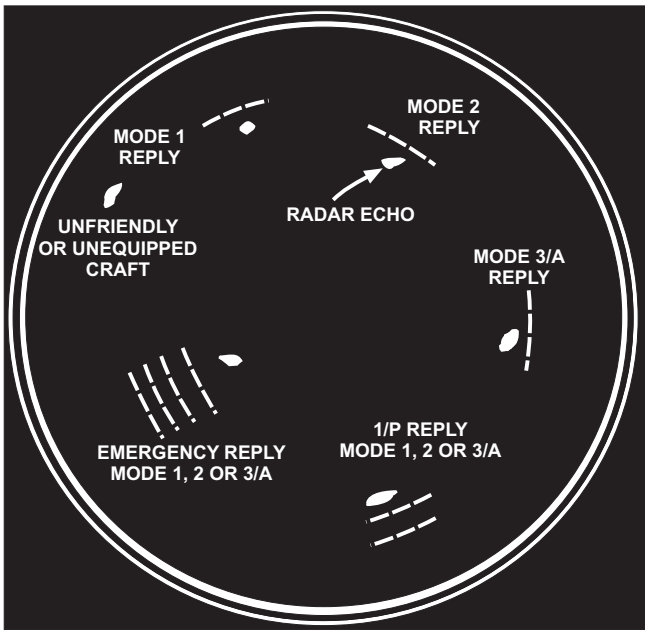

ANF0724

Figure 7-24.—Typical surface radar PPI composite display showing several IFF responses.

aircraft, it is important for air traffic control to know not only their location but their identity. The Selective Identification Feature (SIF) was developed to expand the IFF system. This increases its flexibility through a multiple-code transponder reply. By such means, selective and individual identification of aircraft is possible, with the following results:

- Ground control of friendly aircraft
- Operational flexibility in the identification process
- A measure of additional security in identification

ELECTRONIC COUNTERMEASURES

A basic rule of warfare is that for each weapon used by one side, a counter-weapon will be developed by the other side. This rule is clearly seen in the development and use of electronic countermeasures (ECM). The objective of ECM is to gather intelligence from the enemy's electronic devices and make the devices ineffective. Electronic countermeasures consist of two general types of actions—passive and active.

Passive

Passive ECM operations are those that cannot be directly detected by the enemy. These include search operations where enemy radar transmitters are detected, located, and as many of the signal characteristics as possible are determined. For example, ECM can detect a radar pulse transmission at 1 1/2 times the distance the radar return can detect a target. The signal characteristics determine if the radar is used for search, navigation, or fire control. Passive countermeasures also include evasive tactics taken to avoid detection and methods of controlling the radiations from friendly equipment. Such measures prevent the enemy from using the signals for homing, direction finding, or any other purpose.

Active

Active ECM operations are actions that the enemy can detect. Active operations prevent effective use of the enemy's equipment. Electronic jamming interferes with enemy radar and communications. Active radar nonelectronic jamming is done by releasing strips of metallic foil (chaff or window) from aircraft. The falling strips cause many false targets or cause the enemy scope to cover with clutter that can mask targets from search and fire control radars.

Q7-24. What is the meaning of the acronym radar?

Q7-25. A radar is a device used to detect objects at distances greater than the eye can see by the use of what basic principle?

Q7-26. Sound waves travel how many feet per second?

Q7-27. A system that allows a friendly aircraft to identify itself automatically before approaching near enough to threaten other naval units is known as what type of system?

Q7-28. What are the objectives of electronic countermeasures?

ANTISUBMARINE WARFARE EQUIPMENT (ASW)

LEARNING OBJECTIVE: Identify the purpose and uses of antisubmarine warfare equipment to include sonobuoys and magnetic anomaly detection equipment.

A major problem for the Navy is the detection of enemy submarines. Submarine detection devices include (SOund NAvigation Ranging (sonar), sonobuoys, and Magnetic Anomaly Detection (MAD) equipment. Surface ships, submarines, and harbor defense installations use sonar equipment. Aircraft use MAD equipment.

SONOBUOYS

The sonobuoy is an expendable electronic listening device dropped into water from carrier-based and land-based patrol aircraft. The sonobuoy detects underwater sounds and transmits these sounds to aircraft.

A surfaced or snorkeling submarine is not likely to be detected by an aircraft's radar. The reason is the submarine's ECM detects the aircraft's radar at a greater distance than the aircraft can detect the submarine. The sonobuoy helps solve the submarine detection problem. The sonobuoy, housed in a cylindrically shaped tube, is designed to float upright in the water. Upon being dropped from an aircraft, the sonobuoy, stabilized by small blades, enters the water in an upright position. Upon striking the water, the stabilizing blades eject and a small transmitting antenna erects itself. The impact also causes the release of a hydrophone (underwater microphone). This underwater listening device connects to the end of a cable that permits it to sink to a predetermined depth. The hydrophone receives

underwater sounds and transmits them to the monitoring receiver in the aircraft. By dropping sonobuoys in a pattern over a large ocean area, the airborne sonobuoy receiver operator can determine the approximate location of a submarine. Often its course and speed can also be determined. These methods of detection are passive, and therefore give the aircraft an advantage. Other passive and active tactics use sonobuoys to localize the submarine to a point where attack by airborne weapons is possible.

The sonobuoy continues to float and gather information until a seawater soluble plug dissolves and lets the sonobuoy flood and sink. This action removes an obstruction in the water and permits the frequency of that sonobuoy to be used by another.

MAGNETIC ANOMALY DETECTION (MAD)

Another method of localizing a submerged submarine is by using MAD equipment. This equipment uses the principle that a metallic submarine disturbs the magnetic lines of force of the earth.

Light, radar, or sound energy cannot pass from air into water and return to the air in any degree that is usable for airborne detection. However, lines of force in a magnetic field can make this change. Therefore, a submarine lying beneath the ocean's surface causes a distortion (anomaly) in the earth's magnetic field. The distortion can be detected from a position in the air above the submarine. Detection of this anomaly is the function of MAD equipment.

Figure 7-25, view A, shows the angular direction at which natural lines of magnetic force enter and leave the surface of the earth. View B represents an area of undisturbed natural magnetic strength. In views C and D, the submarine's magnetic field distorts the natural field. The density of the natural field is decreased in view C and increased in view D.

The MAD equipment in the aircraft allows the operator to search selected areas of ocean immediately and accurately. Upon detecting and evaluating a possible enemy, the operator relays the information to surface and airborne forces. Aviation Antisubmarine Warfare Operator (AW) ratings operate ASW equipment.

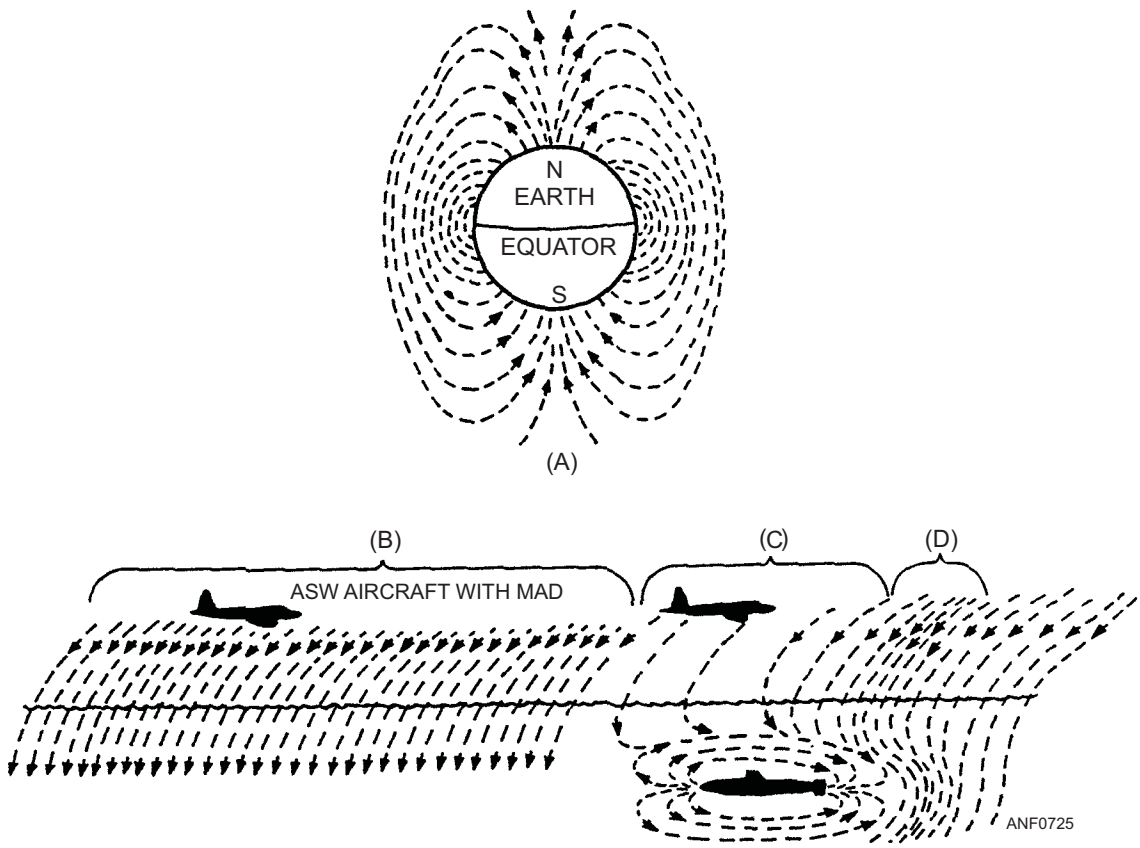

Figure 7-25.—Simplified comparison of natural field density and submarine anomaly.

Q7-29. What is the function of a sonobuoy?

Q7-30. Detection of changes in the earth's magnetic field describes what antisubmarine warfare equipment's basic operating principle?

SUMMARY

In this chapter, you have learned about some of the avionics equipment that is used in modern aircraft. You also learned about the purpose of batteries and their use aboard ships, ac electrical systems, and aircraft gauges.

(THIS PAGE IS INTENTIONALLY LEFT BLANK.)

ASSIGNMENT 7

Textbook Assignment: "Aircraft Avionics," chapter 7, pages 7-1 through 7-21.

7-1. What is an aircraft's first source of electrical energy?

1. Battery
2. Generator
3. Emergency generator

7-2. Which of the following statements is NOT true concerning aircraft batteries?

1. It is important to keep their weight to a minimum
2. They require a great deal of care
3. They usually have a large capacity
4. They are usually enclosed in a grounded, metal-covered housing

7-3. The positive plates of a lead-acid battery are made of what material?

1. Lead peroxide
2. Spongy lead
3. Sulfuric acid fiber
4. Water impregnated composite

7-4. Where does the nickel-cadmium battery get its name from?

1. The composition of its plates
2. The type of electrolyte in the case
3. The construction of the terminal post
4. The rectangular type cells

7-5. What is the principal hazard in connection with the use of lead-acid batteries?

1. Fire
2. Explosion
3. Suffocation
4. Acid burns

7-6. The manufacturer determines the correct charging rates for aircraft batteries.

1. True
2. False

7-7. What does the term "thermal runaway" indicate concerning aircraft batteries?

1. The battery has been overcharged
2. The battery has been rapidly cooled
3. The battery is internally shorted because of overheating
4. The battery has been totally discharged

7-8. CO_2 should NEVER be sprayed in the aircraft battery compartment to effect cooling or displace explosive gases.

1. True
2. False

7-9. What is the purpose of rectifiers?

1. Converts ac to dc
2. Converts dc to ac
3. Converts mechanical to electrical energy
4. Converts electrical to mechanical energy

7-10. Emergency power generators are used to provide power when the engine-driven generators fail.

1. True
2. False

7-11. Auxiliary power units are used to furnish electrical power when which of the following problems occur?

1. Engine-driven generators are not operating
2. External power is not available
3. The engine-driven generator fails
4. Each of the above

7-12. What rating maintains the pitot-static system?

1. AT
2. AE
3. AX
4. AQ

7-13. What three aircraft instruments operate off of the pitot-static system?

1. Airspeed indicator, engine rpm, and altimeter
2. Rate-of-climb indicator, airspeed indicator, and altimeter
3. Engine oil indicator, engine rpm, and compressor speed indicator
4. Oxygen, air-conditioning, and heating systems instruments

7-14. What does the air speed indicator interpret from the pitot tube?

1. Altitude
2. Air density
3. Air flow
4. Air pressure

7-15. What precaution(s) must be observed while working around a pitot tube system?

1. Avoid touching the tubes when the heaters are on
2. Do not obstruct the openings
3. Be sure the tube heaters are off before installing protective covers
4. Each of the above

IN ANSWERING QUESTION 7-16, REFER TO FIGURE 7-7 IN THE TEXT.

7-16. The altimeter indicates what altitude in feet?

1. 100
2. 401
3. 4,100
4. 40,100

7-17. An aircraft flying at 0.5 Mach is flying at what speed?

1. One and one-half the speed of sound
2. Twice the speed of sound
3. Twice the local speed of sound
4. One-half the local speed of sound

7-18. An aircraft flying level at 30,000 feet would indicate which of the following numbers on the rate-of-climb indicator?

1. 0
2. 20
3. 30
4. 40

IN ANSWERING QUESTION 7-19, REFER TO FIGURE 7-11 IN THE TEXT.

7-19. What does the hydraulic pressure gauge indicate?

1. 0 to 5,000 psi for one system
2. 0 to 5,000 psi for two systems
3. 0 to 3,000 psi for one system
4. 0 to 3,000 psi for two systems

7-20. At what location are the thermocouples for an exhaust gas temperature system?

1. The instrument panel
2. The circuit breaker panel
3. The inlet casing
4. The aircraft frame

7-21. What engine component is the exhaust gases temperature measured from?

1. Compressor
2. Tail pipe
3. Engine inlet
4. Turbine

7-22. The fuel quantity indicator displays the aircraft fuel load in what measurement?

1. Pounds
2. Gallons
3. Liters
4. Quarts

7-23. Which of the following factors makes the vertical scale indicator more advantageous than the radial dial indicator on Navy aircraft?

1. It is compact
2. It is light in weight
3. It is easy to read
4. Each of the above

7-24. Which of the following indicators works on the principle of a gyroscope?

1. Fuel quantity indicator
2. Attitude indicator
3. Hydraulic pressure indicator
4. Rpm indicator

7-25. What instrument shows the pilot the relative position of the aircraft compared to the earth's horizon?

1. Turn and Bank indicator
2. Altitude indicator
3. Horizontal situation indicator
4. Attitude indicator

7-26. A turn and bank indicator is really two instruments mounted as a single unit.

1. True
2. False

7-27. Using the turn and bank indicator, a pilot making a properly banked turn to the right would see the ball move to what position on the indicator?

1. Left only
2. Right only
3. Center
4. Left and then right

7-28. A gyro compass provides an accurate, stabilized indication of aircraft heading through what total number of degrees of azimuth?

1. 30°
2. 60°
3. 90°
4. 360°

7-29. The horizontal situation indicator gives what information to the pilot?

1. Direct heading
2. Rate of descent
3. Navigational situation of the aircraft
4. Aircraft attitude

7-30. What are the two major uses of airborne radios?

1. Communications and detection
2. Communications and navigation
3. Navigation and detection
4. Detection and ranging

7-31. What rating normally maintains communications and navigational equipment?

1. AC
2. AE
3. AT
4. AW

7-32. What means of radio communications transmits a rapid succession of images (still or moving) over a radio-frequency channel?

1. Radiofacsimile
2. Radioteletype
3. Radiotelephony
4. Radiotelevision

7-33. Long-range airborne communications sets operate in what band of frequencies?

1. From 3 to 30 kilohertz
2. From 3 to 30 megahertz
3. From 30 to 300 megahertz
4. From 30 to 300 kilohertz

7-34. What is the frequency band of short-range VHF/UHF communication sets?

1. 30 megahertz to 3 gigahertz
2. 300 kilohertz to 3 megahertz
3. 30 kilohertz to 300 kilohertz
4. 30 gigahertz to 300 gigahertz

7-35. VHF/UHF communication sets are called line-of-sight communication sets.

1. True
2. False

7-36. What is the primary navigational aid for carrier-based aircraft?

1. Loran
2. Omega
3. Dead reckoning
4. TACAN

7-37. The main advantage of GPS over LORAN navigation is that GPS navigation provides highly accurate three-dimensional position, velocity, and time data.

1. True
2. False

7-38. Which of the following computations is made by navigational computers?

1. Aircraft ground track angle
2. Bearing to target
3. Distance to target
4. Each of the above

7-39. What does Doppler radar measure?

1. Ground speed only
2. Drift angle only
3. Ground speed and drift angle
4. Latitude and longitude

7-40. The inertial navigation system is an automatic aid to navigation that is independent of outside references.

1. True
2. False

7-41. Which of the following data does the inertial navigational system (INS) provide to the overall tactical system?

1. Accurate velocity
2. Attitude
3. Heading data
4. Each of the above

7-42. Upon what principle does radar work?

1. Ranging
2. Detection
3. Echo
4. Radio

7-43. Radio waves travel at what speed?

1. 1,100 feet per second
2. 1,100 miles per hour
3. 186,000 miles per hour
4. 186,000 miles per second

7-44. If it takes 6 seconds for a sound wave to travel to an object and return, what is the distance of the object?

1. 1,100 feet
2. 2,200 feet
3. 3,300 feet
4. 6,600 feet

7-45. Radio waves travel much faster than sound waves?

1. True
2. False

7-46. What rating normally maintains AEW equipment?

1. AT
2. AE
3. AQ
4. AW

7-47. What characteristics make radar suitable for directing fire control radar systems?

1. Range measurement
2. Target display
3. Narrow focused radar beam
4. All of the above

7-48. What is the purpose of IFF?

1. Fire control
2. Navigation
3. Early warning
4. Distinguishing friend from foe

7-49. Selective Identification Feature (SIF) was developed to expand the IFF system.

1. True
2. False

7-50. What are the two types of electronic countermeasures?

1. Active and passive
2. Active and progressive
3. Passive and collective
4. Passive and interceptor

7-51. What type of ECM uses jamming?

1. Passive only
2. Active only
3. Passive and active
4. Passive and progressive

7-52. Which of the following detection devices is used to detect submarines?

1. Sonar
2. Sonobuoy
3. Magnetic Anomaly Detection (MAD) equipment
4. Each of the above

7-53. Which of the following statements is NOT true concerning sonobuoys?

1. They are dropped from carrier-based aircraft
2. They are dropped from land-based aircraft
3. They are expendable
4. They are nonexpendable

7-54. Upon what principle does MAD operate?

1. Light
2. Radar
3. Sound
4. Magnetic field

7-55. What rating operates ASW equipment?

1. AE
2. AT
3. AQ
4. AW

CHAPTER 8

AIRCRAFT ORDNANCE

INTRODUCTION

As an Airman, you might be assigned to the armament branch of an aircraft squadron, the weapons department of a naval air station, or an aircraft carrier. Regardless of where you are assigned, you will work around aircraft armament systems and various associated weapons.

Aviation Ordnancemen (AOs) handle aircraft ordnance. They work with aircraft guns and pyrotechnics. They also maintain bombs, rockets, missiles, mines and torpedoes. They maintain the aircraft weapons releasing and launching equipment necessary for disbursing such items. AOs are familiar with the safety precautions for working with such material. Personnel directly involved in ordnance handling must be qualified and/or certified according to the Navy's current qualification/certification program.

You may not be assigned in an area that requires direct contact with ordnance. You must still be familiar with the basic characteristics of ordnance and hazards peculiar to aircraft ordnance.

GENERAL TERMINOLOGY AND DEFINITIONS

LEARNING OBJECTIVE: Recognize common terms and definitions associated with aircraft ordnance.

AOs use special terminology on the job. To understand this chapter, you should know these terms. A few of the more common terms and definitions are as follows:

Ordnance. Military material (such as combat weapons of all kinds) with ammunition and equipment required for its use. Ordnance includes everything that makes up a ships or aircraft's armament. This includes guns, ammunition, and all equipment needed to control, operate, and support the weapons.

Propellant. The material that provides the energy for propelling a projectile. Specifically an explosive charge for propelling a bullet, shell, or the like. It may also be a fuel, either solid or liquid, for propelling a rocket or missile.

Pyrotechnics. Ammunition containing compositions that produce illumination. Examples are colored lights or smoke for marking or signaling, or incendiary effects of smoke screens.

Ammunition. A device charged with explosives, propellants, pyrotechnics, initiating composition, or chemical material.

Bomb-type ammunition. Bomb-type ammunition is characterized by a large high-explosive charge-to-weight ratio. Examples are aircraft bombs, mines, and warheads used in guided missiles and rockets. This ammunition has destructive blast effect at or near the target.

Cartridge-activated device (CAD). Explosive-loaded devices designed to provide the means of releasing or harnessing potential cartridge energy to initiate a function or a special-purpose action. Aircraft equipment, such as ejection seats, canopy ejection systems, aircraft bomb racks, and launchers, use CADs.

Chemical ammunition. Chemical ammunition consists of a variety of items that depend upon a chemical filling for its effect rather than upon explosives or shrapnel. An explosive or ignition element must activate this ammunition.

Inert ordnance. Actual size ammunition items with working mechanisms used for training exercises but having no explosive materials.

Guided missile. An unmanned vehicle designed as a weapon that travels above the surface of the earth. This vehicle follows a course or trajectory that is guided by an automatic or remotely controlled mechanism within the vehicle.

Incendiary. A chemical used to ignite combustible substances.

Practice/training ammunition. An ammunition item that looks and acts just like the service item. It may be a modification of a service (tactical) item or something designed specifically for practice. Used in training associated with all types of ordnance. Practice ammunition may either be expendable or recoverable, depending upon the device involved.

Service ammunition. Ammunition for combat use. This ammunition is approved for service use. It contains explosives, pyrotechnics, or chemical agent filler. The propellant, if required, is of service or reduced charge weight. Service ammunition is also called *tactical ammunition*.

Warhead. The part of ammunition containing the materials intended to inflict damage. The explosives in warheads are called the *payload*.

Airborne stores. Items that are NOT normally separated from the aircraft in flight. A partial list of these items includes tanks, pods, and non-expendable training weapons. Targets, racks, launchers, adapters, and detachable pylons are also included.

Q8-1. What aircraft equipment uses cartridge-active devices (CADs)?

Q8-2. Define the term incendiary.

Q8-3. What are airborne stores?

THE FUNDAMENTALS OF EXPLOSIVES

LEARNING OBJECTIVE: Recognize the fundamental concepts of explosives, the potential hazards associated with weapons, and the identification and marking of ammunition.

You should know the difference between an explosive and an explosion. An explosive is a material that is capable of producing an explosion by its own energy.

There are many definitions of an explosion. Dr. Tenney L. Davis gave us the only simple definition: an explosion is "a loud noise and the sudden going away of things from the place where they have been." Another definition states "an explosion is a rapid and violent release of energy, not necessarily involving an explosive substance." For example, in the explosion of a boiler, the water is not an explosive substance.

In this chapter, an explosion is defined as "a chemical decomposition or transformation, with the growth of heat and the formation of decomposition products, sometimes producing gas." All explosives in military use produce gas, so this definition is correct, though a chemist might not agree.

If ammunition is to function at the time and place desired, you must use the right type of explosives. Each has a role, either as a propellant or as a bursting charge. Explosives suitable for one purpose may be entirely unsatisfactory for another. For example, the explosive used to burst forged steel projectiles is unsuitable for ejecting and propelling the projectile. Normally, the more sensitive the explosive, the smaller the amount used. Similarly, the explosives used in initiators, such as primers and fuzes, are so sensitive to shock that only a small quantity can be used safely.

HIGH AND LOW EXPLOSIVES

There are two general classes of military explosives—high explosives and low explosives. Each is classified according to its rate of decomposition. High and low explosives may be further classified by their reaction, composition, or service use. However, only the two general classes, high and low, are covered in this chapter.

High Explosives

High explosives are usually nitration products of organic substances. They may contain nitrogen and inorganic substances or mixtures of both. A high explosive may be a pure compound or a mixture of several compounds. Additives, such as powdered metals, plasticizing oils, or waxes, provide desired stability and performance characteristics.

A high explosive is characterized by extremely fast decomposition called detonation. A high explosive detonates almost instantaneously. The detonation is similar to a very rapid combustion or a rupture and rearrangement of the molecules themselves. In either case, gaseous and solid products are produced. The disruptive effect of the reaction makes some explosives valuable as a bursting charge. This bursting effect prevents its use in ammunition and gun systems because the gas pressures formed could burst the barrel of a weapon.

Low explosives

Low explosives are mostly solid combustible materials that decompose rapidly but do not normally explode. This action is called *deflagration*. Upon ignition and decomposition, gas pressures develop to propel something in a definite direction. Ammunition, gun systems, and some missiles use this type of explosive. The rate of burning is an important characteristic, which depends on such factors as combustion gas pressure, grain size and form, and composition. Under certain conditions, low explosives may react in the same manner as high explosives and explode.

ORDNANCE IDENTIFICATION AND MARKING

Identification of ammunition is extremely important when handling ordnance. Identification provides working/safety information, such as service (live)/nonservice (training) ammunition, class of explosives, and color codes representing the explosive hazards. Identification also provides administrative information, such as mark, modification, and lot numbers.

Color codes contain the most important information of the identification system! Color codes identify the explosive hazards contained within the ordnance. Regardless of your rating, you will work around ordnance-handling crews. Therefore, you should be familiar with the color code identification of ordnance.

Table 8-1 gives the color codes used to identify the hazards contained in ordnance. It also gives the meaning for each color code. These colors are normally painted on the ordnance during manufacturing. The colors may be stripes painted around the body or down the side of the item.

You can use the color codes shown in table 8-1 to identify ordnance explosive hazards. For example, you are approaching an aircraft and there is a bomb loaded on a wing station. The bomb is painted an olive drab (overall) color and has a yellow band painted around the nose. The olive drab color has no identification color-coding significance; but, the yellow band means that the bomb contains high explosives. Another example is a missile. A missile is painted white with a yellow band around the warhead section and a brown band around the rocket motor section. The white color on a missile has no identification color-coding significance. The yellow band means that the warhead contains high explosives. The brown band means that the rocket motor contains low explosives.

Knowing the color codes and the type of ordnance loaded on the aircraft give you vital information in an emergency such as a fire. For example, an aircraft loaded with ordnance is engulfed in a fire. All the ordnance on the aircraft is a light blue color with no other identification color codes visible. From this visual information, you can determine that none of the ordnance contains explosives. Thus, the fire can be fought much closer to the aircraft than if the ordnance contained high explosives.

Q8-4. What is the difference between an explosive and an explosion?

Q8-5. What are the two general classes of military explosives?

Q8-6. High explosives are not used in ammunition and gun systems for what reason?

Q8-7. Define low explosives.

Q8-8. What type of information is provided by ordnance identification?

Q8-9. In the ordnance identification system, the color codes provide what information?

AIRCRAFT WEAPONS AND AMMUNITION

LEARNING OBJECTIVE: Identify the types, uses, and basic characteristics of aircraft weapons and ammunition.

Aircraft weapons and ammunition are designed to reduce and/or neutralize an enemy's war potential. Several different types are discussed in the following text.

AIRCRAFT BOMB-TYPE AMMUNITION

Bomb-type ammunition is carried either in the bomb bay of an aircraft or externally on the wing or fuselage stations. Because of safety requirements, some bomb-type ammunition is shipped and stowed without the fuzes or arming assemblies. Ordnancemen must assemble these types of ammunition before they are used. Other types, such as cluster bomb units (CBUs), are shipped and stowed as complete assemblies.

Only the general characteristics and basic principles of operation for bomb-type ammunition and associated components are discussed in this chapter.

Table 8-1.—Ammunition Color Codes

COLOR	INTERPRETATION
Yellow	(1) Identifies high explosives (2) Indicates the presence of explosive, either (a) sufficient to cause the ammunition to function as a high explosive, or (b) particularly hazardous to the user
Brown	(1) Identifies rocket motors (2) Indicates the presence of explosive, either (a) sufficient to cause the ammunition to function as a low explosive, or (b) particularly hazardous to the user
*Gray	(1) Identifies ammunition that contains irritant or toxic agents when used as an overall body color, except for underwater ordnance.
Gray with red band(s)	(1) Indicates the ammunition contains an irritant (harassing) agent.
Gray with dark green band(s)	(1) Indicates the ammunition contains a toxic agent.
*Black	(1) Identifies armor-defeating ammunition, except on underwater ordnance.
Silver/aluminum	(1) Identifies countermeasures ammunition.
Light green	(1) Identifies smoke or marker ammunition.
Light red	(1) Identifies incendiary ammunition or indicates the presence of highly flammable material.
White	(1) Identifies illuminating ammunition or ammunition producing a colored light, except for underwater ordnance, guided missiles, and rocket motors.
Light blue	(1) Identifies ammunition used for training or firing practice.
*Orange	(1) Identifies ammunition used for tracking or recovery.
Bronze	(1) Identifies dummy/drill/inert ammunition used for handling and loading training.
Nonsignificant Colors	
Olive drab	(1) All ammunition items.
Black	(1) For lettering
White	(1) For lettering (2) For guided missiles and rocket motors.

*__NOTES__: The following colors, when applied as stated, have **no** identification color coding significance:

1. The colors **gray**, **orange**, **black**, **white**, **brick red**, or **green** on underwater ordnance, such as mines and torpedoes, and the color white on guided missiles or rockets.
2. The colors **black** and **white**, when used for lettering.
3. The color **white** when used in diamond-shaped figures on ammunition.

MK 80 (SERIES) GENERAL-PURPOSE BOMBS

The Mk 80 (series) low-drag, general-purpose (LDGP) bomb (fig. 8-1) is used in aircraft bombing operations. The case (bomb body) is aerodynamically designed and relatively light. Only 45 percent of the bomb's total weight consists of explosives.

The basic difference between the bombs shown in figure 8-1 is their size and weight. Unless otherwise indicated, the following details of the Mk 80 (series) LDGP bomb will be applicable to all the bombs listed in figure 8-1.

A complete bomb consists of all the components and accessories necessary for the bomb to function in the manner intended. Sensitive or fragile components, such as fuzes and adapter boosters, are packed separately and assembled to the bomb before it is used. The components of a typical LDGP bomb are as follows:

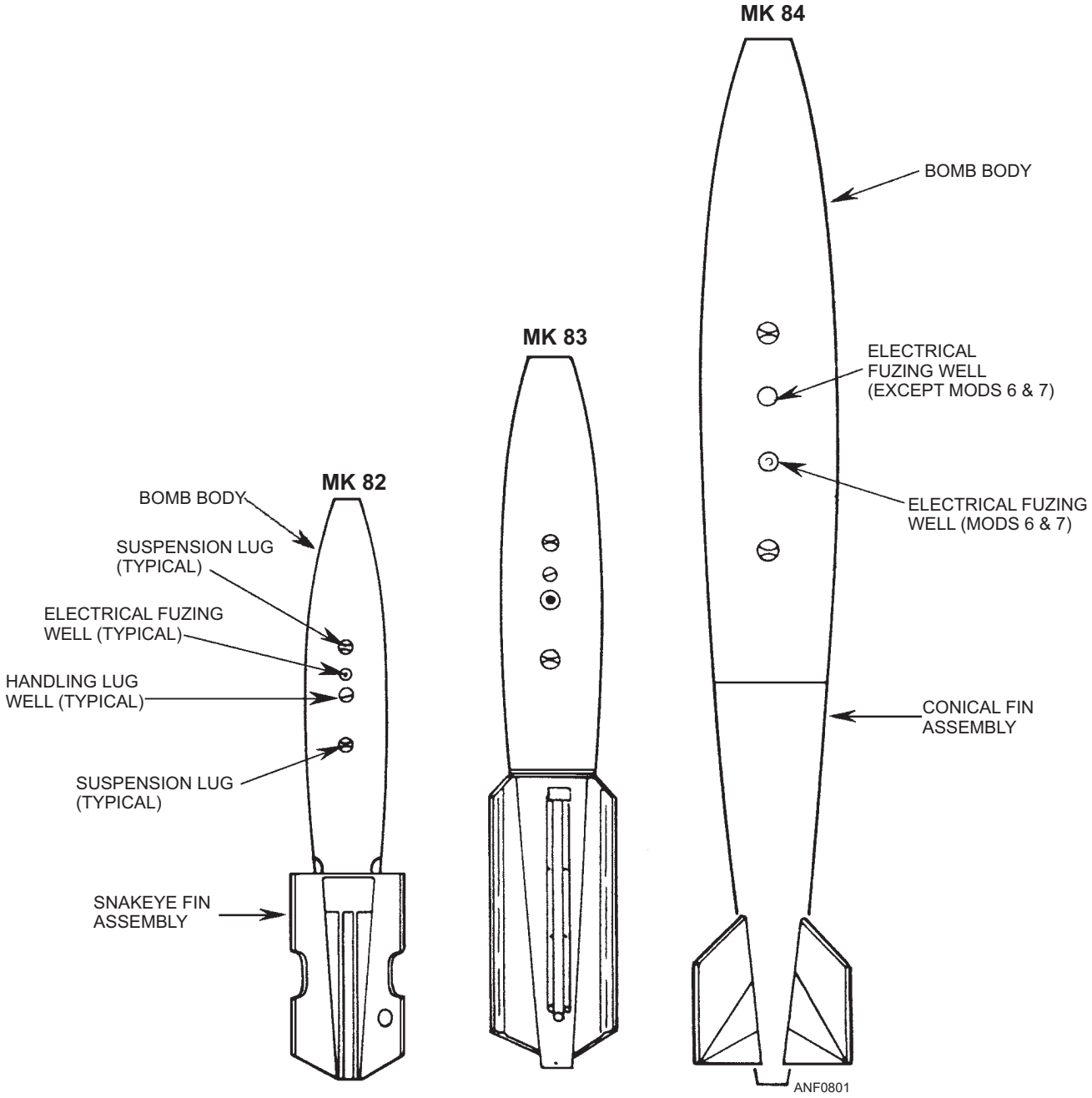

Figure 8-1.—Mk 80/BLU series bombs.

- Bomb body
- Suspending lugs
- Fuzing
- Fin assemblies

Bomb Body

The bomb body (fig. 8-1) is a metal container that contains the high explosive charge. There is a threaded cavity in both the nose and tail of the bomb body that allows the various fuzing applications. The bomb body also has threaded cavities for the installation of suspension and/or hoisting lugs. The rear charging tube, forward charging tube, charging receptacle, and charging receptacle plug are installed in the bomb body during the manufacturing process. These are used with various fuzing operations.

Suspending Lugs

Suspension lugs (fig. 8-1) are used for attaching the assembled bomb to the aircraft's suspension and releasing equipment. The lugs screw into the bomb body in pairs. They are spaced either 14 or 30 inches apart, depending on the size of bomb. During loading, the lugs engage the bomb rack suspension hooks, securing the bomb to the aircraft.

Fuzing

There are various fuzing combinations for the bomb body, depending on tactical requirements. Fuzes are divided into two broad categories—mechanical and electrical. Mechanical and electrical fuzes can be installed in either the nose and/or tail of the bomb body. These fuzes are maintained in a safe condition by the insertion of a safety cotter pin or arming wire through the arming vane and the fuze body. Mechanical fuzes are activated by means of an arming wire or lanyard, or by electrical energy transferred from the aircraft-carried equipment to the fuze as the weapon is released from the aircraft. When the mechanically fuzed weapon is released and falls away from the aircraft, the arming wire is pulled from the arming vane. This allows the arming vane to rotate in the airstream, arming the fuze. For emergency or other tactical reasons, the pilot has the option of permitting the arming wire to fall with the weapon. When the pilot uses this option, the arming vane can't rotate. Therefore, the weapon remains in an unarmed condition. When an electrically fuzed weapon is released from the aircraft, it receives the necessary electrical voltage signal from the aircraft firing circuits to arm the fuze.

Fin Assemblies

Fin assemblies provide bomb stability and cause it to fall in a smooth, definite curve to the target.

The conical fin (fig. 8-1) is used for the unretarded mode of delivery. The Snakeye fin assembly is used for either the low drag, unretarded (fig. 8-2, view A) or high drag retarded (fig. 8-2, view B) mode of delivery. Low-level bombing requires the retarded mode of delivery. The aircraft and the weapon are traveling at the same speed at the time of weapon release. This means the weapon and the aircraft will arrive at the target together, which could result in explosion damage to the aircraft. Therefore, use of the retarded mode of delivery retards (slows down) the weapon so the weapon gets to the target after the aircraft has passes. The explosion occurs after the aircraft passes the target.

Mk 80 series LDGP bombs are painted an olive drab color overall. A single or double yellow band painted around the nose of the bomb body identifies a high-explosive hazard. The double yellow bands indicate that the bomb body is thermally protected. This protection increases the weapon's *cook off* time if the weapon is engulfed by fire.

PRACTICE BOMBS

Practice bombs display the same ballistic properties as service-type bombs; however, they contain no explosive filler. Therefore, practice bombs are safer to use when training new or inexperienced pilots and ground handling crews. Practice bombs are inexpensive and can be used in more target locations.

There are two types of practice bombs—full-scale and subcaliber. **Full-scale** practice bombs are about the same size and weight as service bombs. **Subcaliber** practice bombs are much smaller than the service bombs they simulate.

Full-Scale Practice Bombs

The full-scale practice bombs are the Mk 82, 83, and 84 series LDGP inert bombs. Each bomb can be configured with the same components, such as fuzes, fins, and suspension lugs that are used with service bombs. The Mk 80 series practice bombs have an overall blue exterior or an olive drab exterior. Mk 80 series bombs also have a blue band around their nose and the word INERT in 1-inch letters on the exterior bomb body.

Subcaliber Practice Bombs

There are two types of subcaliber practice bombs—the Mk 76 Mod 5 and the BDU-48/B.

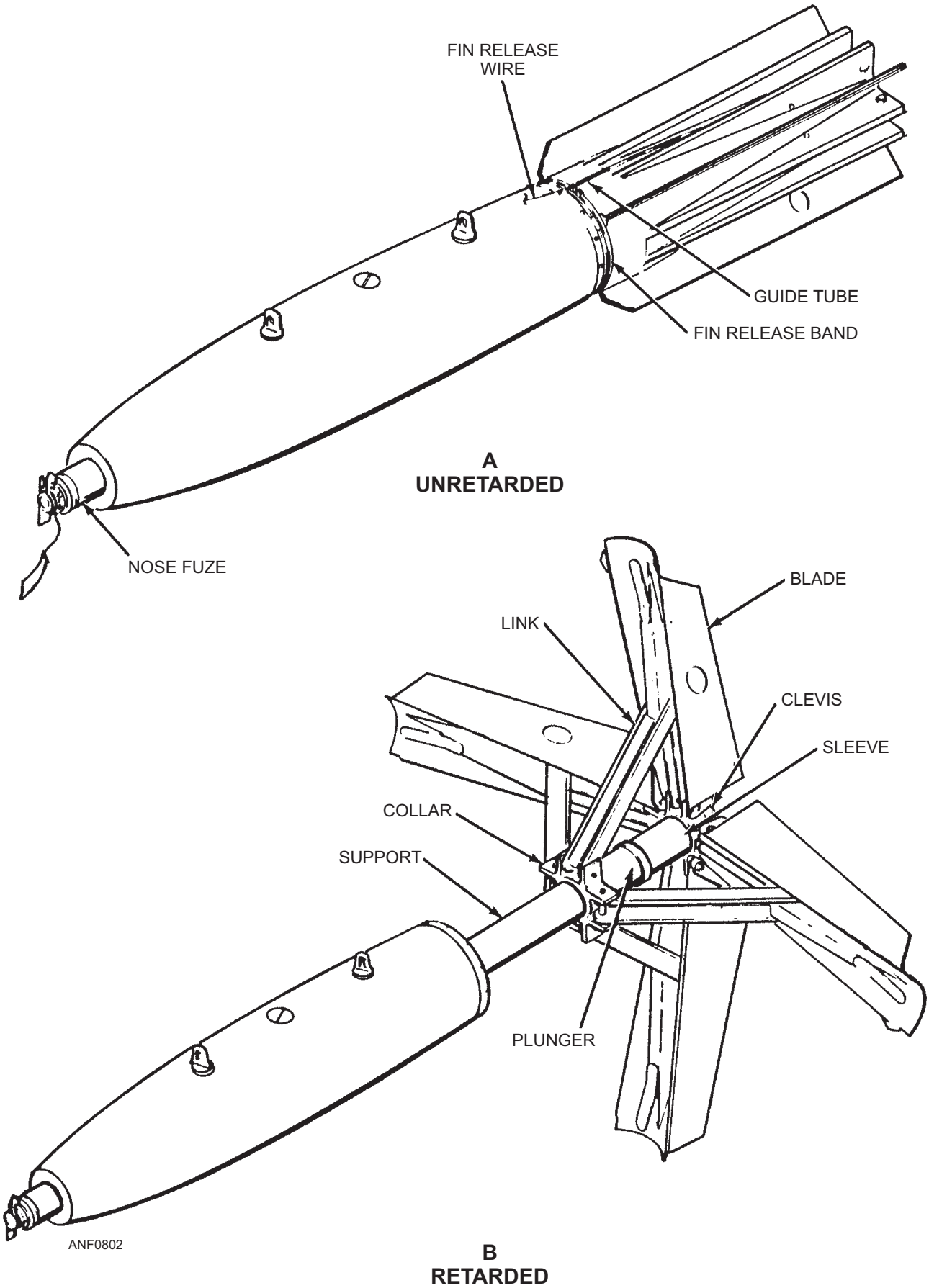

Figure 8-2.—Mk 82 LDGP bomb configured with a Snakeye fin assembly.

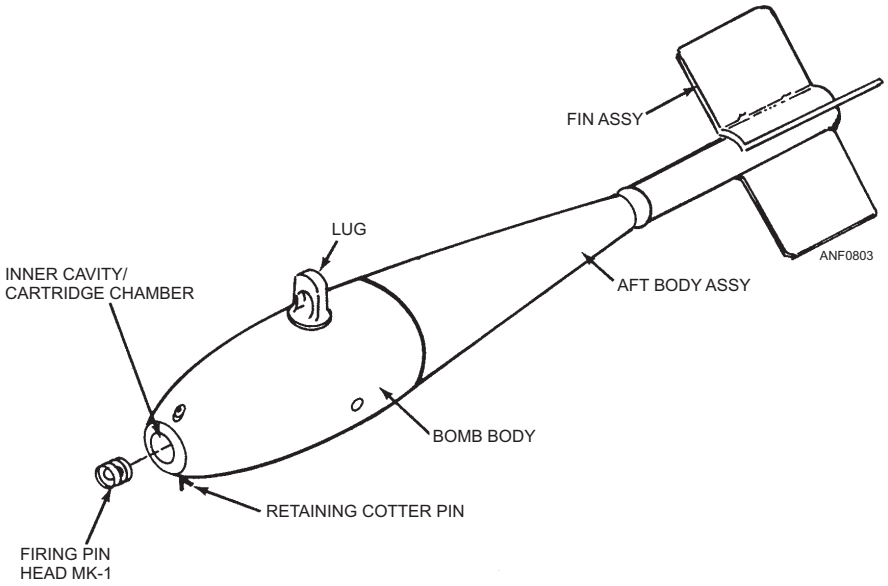

Figure 8-3.—Mk 76 Mod 5 practice bomb.

Although both are used for practice, each is quite different in design and appearance.

MK 76 MOD 5.—The 25-pound, solid metal-cast, Mk 76 Mod 5 practice bomb (fig. 8-3) has a teardrop-shaped body. It is centrally bored to permit the insertion of a practice bomb signal cartridge. The after body, covering the tail tube, is crimped to the bomb body and has welded-on conical tail fins. The bomb has single-lug suspension and is painted blue with identification nomenclature s stenciled in white letters on the body. The Mk 76 Mod 5 subcaliber practice bomb is specifically designed to simulate unretarded weapon delivery.

BDU-48/B.—The 10-pound BDU-48/B practice bomb (fig. 8-4) is a thin-cased cylindrical bomb used to simulate retarded weapon delivery. The bomb is composed of the bomb body with a bore tube for the installation of a single cartridge, a spring-loaded retractable suspension lug, firing device, and box-type fin assembly. The bomb is painted blue with identification nomenclature stenciled in white letters on the body.

CLUSTER BOMB UNITS (CBUs)

Cluster bomb units (CBUs) are weapons that carry and dispense small bomblets over a large target area. These weapons are designed to destroy material and

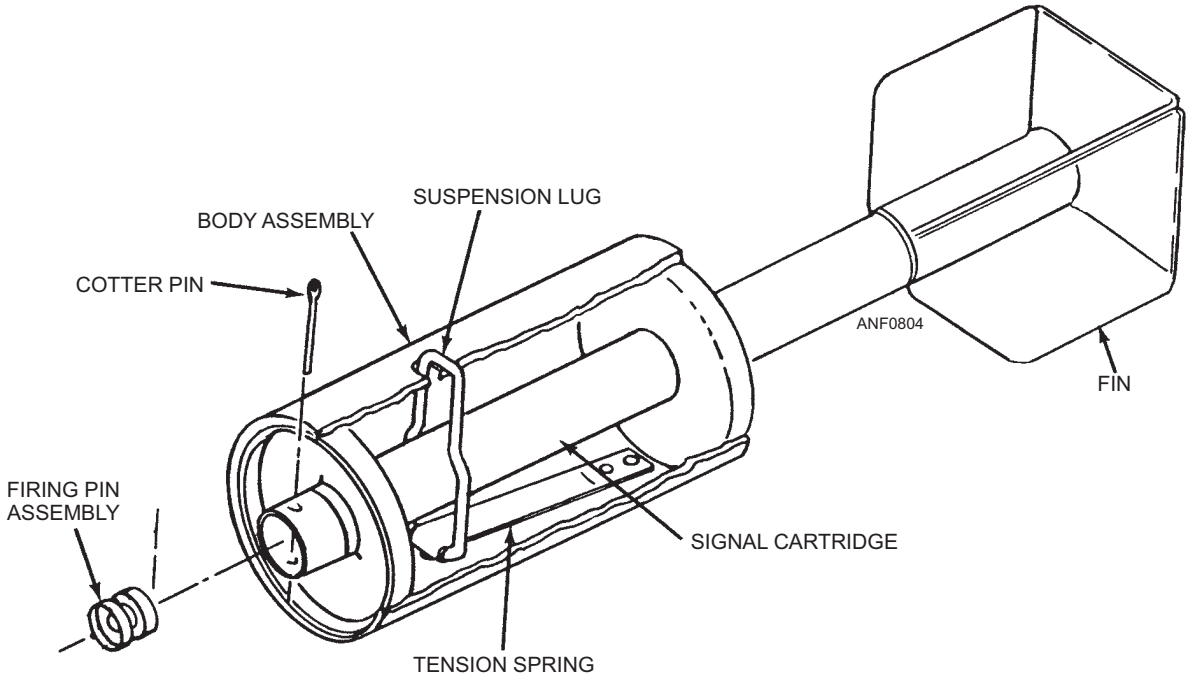

Figure 8-4.—BDU-48/B practice bomb.

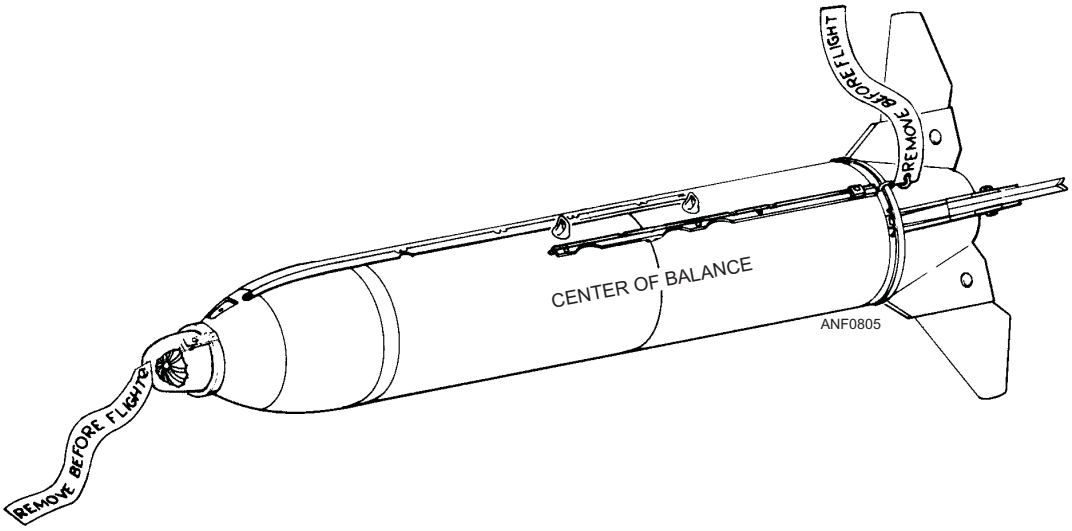

Figure 8-5.—Mk 20 Mods antitank bomb cluster and CBU-59/B antipersonnel/antimaterial bomb cluster.

personnel targets. The most commonly used types are discussed in this section.

Antitank Bomb Cluster and Antipersonnel/ Antimaterial Bomb Cluster

The antitank bomb cluster Mk 20 Mods and the antipersonnel/antimaterial bomb cluster CBU-59/B (fig. 8-5) are air-launched, conventional free-fall weapons. The Mk 20 Mods are used against armored vehicles. The CBU-59/B is used against light material and personnel targets.

The Mk 20 Mods and CBU-59/B CBUs are delivered to the fleet completely assembled. Fuzes, suspension lugs, arming wires, wire extractors, and all other necessary components have been installed.

The only difference between the Mk 20 Mods and the CBU-59/B CBUs is the type of bomb/bomblets contained inside the dispenser. The Mk 20 CBU weighs 490 pounds and contains 247 Mk 118 antitank bombs. The CBU-59/B weighs 750 pounds and contains 717 BLU-77/B target discriminating shape-charge airburst bomblets.

When either the Mk 20 Mods or the CBU-59/B CBU is released from the aircraft, the fuze arming wire and the fin release wire is withdrawn from the fuze, allowing the fuze to function after the preset delay. Functioning of the fuze initiates a linear-shaped charge in the dispenser. This, in turn, cuts the dispenser case in half, dispersing the bombs/bomblets in the air.

Both CBUs are painted white with a yellow band on the dispenser body, indicating a high-explosive hazard.

Guided Bombs Unit (GBU)

GBU-12, GBU-16, and GBU-10 are Mk 82, Mk 83, and Mk 84 bombs that are actually low-drag, general-purpose (LDGP) bombs modified to detect a target illuminated by a laser beam (fig. 8-6). LDGP

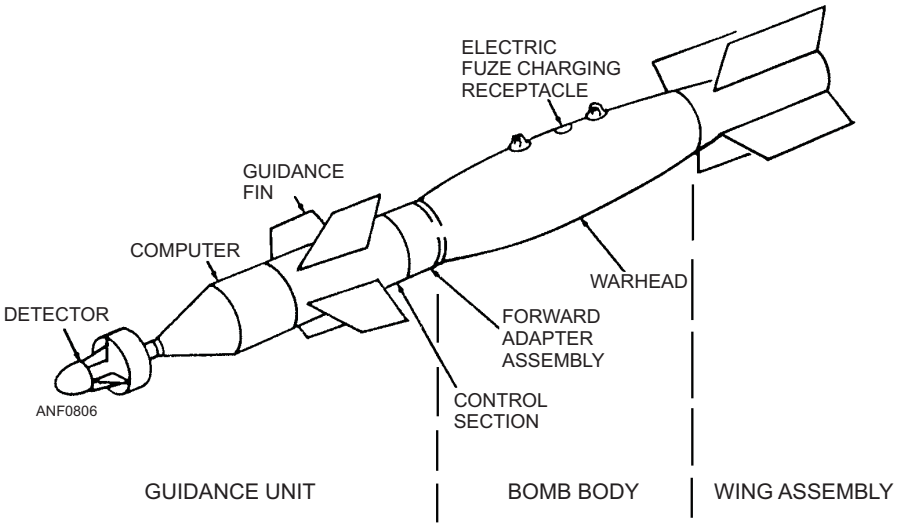

Figure 8-6.—Typical guided bomb unit.

bombs are converted into GBUs by the attachment of a guided bomb unit kit. Each guided bomb unit kit contains a computer-control group (CCG) and an airfoil group (wing assembly and guidance fins).

The CCG mounts on the nose of the bomb body. This precludes the use of nose fuzing. The CCG detects and guides on a laser-illuminated target. It provides weapon guidance signals to the movable guidance fins to guide the weapon to the target. An electrical fuze installed in the tail of the bomb detonates the bomb at the proper time.

Except for the glass nose of the CCG, all components are painted olive drab. The bomb body has standard LDGP markings. A single or double yellow band around the nose of the bomb body indicates a high-explosive hazard.

Mines

The Mk 62, Mk 63, and Mk 64 mines are all modular, influence-actuated bottom mines. They are used against submarines and surface targets. The mines are upgraded by installation of the Mk 130 conversion kit and Mk 130 battery and flight gear.

The Mk 65 Quickstrike mine (fig. 8-7) is a 2,000-pound, air-laid, all modular, influence-actuated, bottom mine. The Mk 65 is used against submarines and surface targets. The Mk 65 consists of a mine case, a Mk 45 safety device arming group with a Mk 2 arming device, a Mk 57 target detecting device, and a Mk 7 tail assembly.

Q8-10. What are the four components of the Mk 80 series bombs?

Q8-11. What are the two types of practice bombs used to train new or inexperienced pilots and ground crew?

Q8-12. What are two types of cluster bombs used by the Navy?

AIR-LAUNCHED WEAPONS

LEARNING OBJECTIVE: Identify the types, uses, and basic characteristics of air-launched weapons.

Air-launched weapons are designed to be either rail or ejection launched. In the case of airborne rockets, they are fired from launchers suspended on the parent rack of Navy aircraft. Underwater weapons, such as air-laid mines and torpedoes, are suspended from the parent rack and bomb bays of aircraft, and are designed to destroy enemy submarines and surface ships.

Air-launched weapons provide a defensive or offensive capability against enemy aircraft, combatant ships, ground radar installations, armored vehicles, and cruise missiles. Some of the various types of airborne

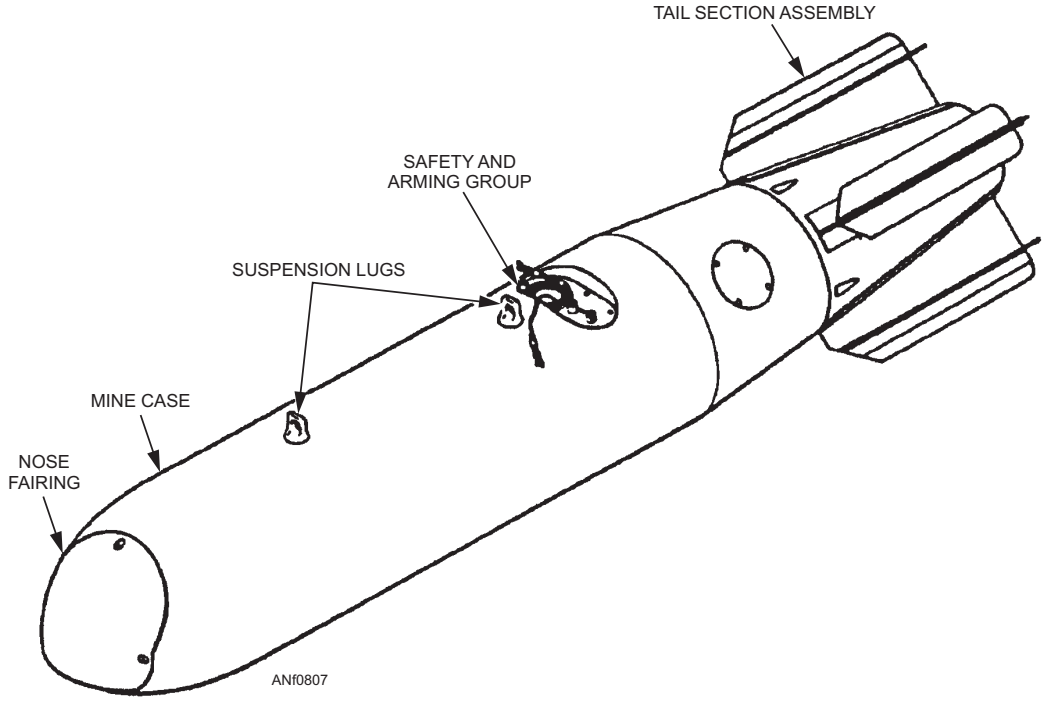

Figure 8-7.—Mk 65 Quickstrike mine.

rockets, guided missiles, and underwater weapons used by the Navy are discussed in the following text.

AIRBORNE ROCKETS

The Navy uses two types of rockets—the 2.75-inch Mighty Mouse and the 5.0-inch Zuni. The 2.75 standard folding-fin aircraft rocket (FFAR) motor (fig. 8-8, view A) uses a standard nozzle insert. The low-speed FFAR rocket motor (fig. 8-8, view B) uses a scarfed nozzle insert. When the low-speed rocket is fired, the scarfed nozzle insert causes the rocket to spin during flight. This spin enables the rocket to be fired from a slow-flying aircraft, such as a helicopter, and still maintain trajectory to the target.

In early development, both the Mighty Mouse and the Zuni were used against both air and ground targets. However, with the introduction of modern missile technology, rockets are now used primarily against ground targets. The Mighty Mouse is fired in large numbers. It is carried in rocket launchers with a capacity of 7 or 19 rockets. The Zuni, which carries a much larger explosive payload than the Mighty Mouse, is carried in rocket launchers with a capacity of four rockets. Both the Mighty Mouse and the Zuni are fired either singularly, in pairs, or in ripple salvo.

AIR-LAUNCHED GUIDED MISSILES

A guided missile is defined as "a self-propelled object that automatically alters its direction of flight in response to signals received from outside sources." Guided missiles are equipped for, and usually carry, high-explosive charges. They have the means to explode on contact or in near proximity of a target. The majority of guided missiles used in the Navy are essentially rockets that can maneuver while in flight and make course corrections to intercept the target.

Guided missiles are classified according to their range, speed, and launch environment, mission, and vehicle type. Long-range guided missiles can usually travel at least 100 miles. Short-range guided missiles usually do not exceed the range capabilities of long-range guns. Between these extremes the Navy has an arsenal of medium or extended-range guided missiles.

Guided missile speed is expressed in Mach numbers. The Mach number *"is the ratio of the speed of an object to the speed of sound in the medium through which the object is moving."* Therefore, an object moving at sonic speed is traveling at Mach 1. In air under standard atmospheric conditions, sonic speed is 766 miles per hour. Guided missiles are classified according to speed as follows:

1. Subsonic—up to Mach 0.8,
2. Transonic—Mach 0.8 to Mach 1.2,
3. Supersonic—Mach 1.2 to Mach 5.0, and
4. Hypersonic—above Mach 5.0.

The speed of the launching aircraft is added to the speed of the missile. Therefore, if a missile's speed is Mach 2.5 and the aircraft's speed, at the time of missile launch, is Mach 2.0, the missile would be traveling at Mach 4.5.

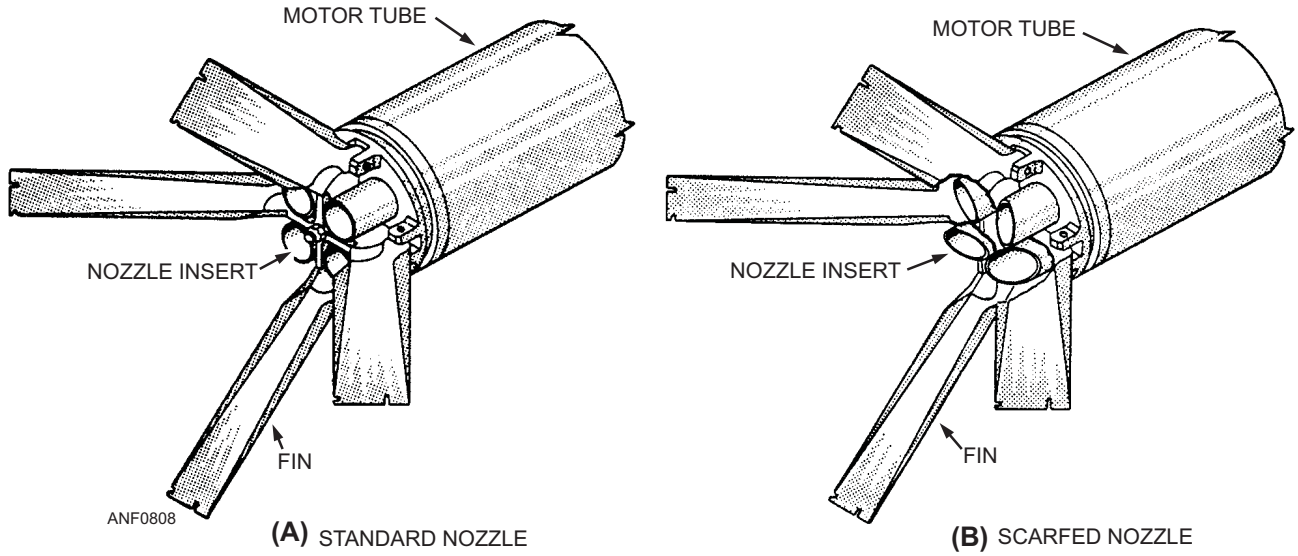

Figure 8-8.—Nozzle and fin assemblies. (A) standard nozzle; (B) scarfed nozzle.

The Department of Defense has established a missile and rocket designation system. The designation of every guided missile includes letters that show the following information:

1. The environment from which the missile is launched
2. The primary mission of the missile
3. The type of missile

The letters of the basic designator and their meaning are listed in table 8-2.

Examples of common guided missile designators are as follows:

Table 8-2.—Guided Missile and Rocket Designations

FIRST LETTER DESIGNATING LAUNCH ENVIRONMENT	**DESCRIPTION**
A Air	Air launched
B Multiple	Capable of being launched from more than one environment
C Coffin	Stored horizontally or at least less than 45° angle in a protective enclosure and launched from the ground
F Individual	Carried and launched by one man
M Mobile	Launched from a ground vehicle or movable platforms
P Soft pad	Partially or non-protected in storage and launched from the ground
U Underwater	Launched from a submarine or other underwater device
R Ship	Launched from surface vessel, such as a ship or barge
SECOND LETTER DESIGNATING MISSION SYMBOL	**DESCRIPTION**
D Decoy	Vehicles designed or modified to confuse, deceive, or divert enemy defenses by simulating an attack vehicle
E Special electronic	Vehicles designed or modified with electronics equipment or communications, countermeasures, electronic relay missions
G Surface attack	Vehicles designed to destroy enemy land or sea targets
I Intercept aerial	Vehicles designed to intercept aerial targets in defensive roles
Q Drone	Vehicles designed for reconnaissance or surveillance
T Training	Vehicles designed or permanently modified for training purposes
U Underwater attack	Vehicles designed to destroy enemy submarines or other underwater targets or to detonate underwater
W Weather	Vehicles designed to observe, record, or relay data pertaining to meteorological phenomena
THIRD LETTER DESIGNATING VEHICLE TYPE SYMBOL	**DESCRIPTION**
M Guided missile	An unmanned, self-propelled vehicle with remote or internal trajectory guidance
R Rocket	A self-propelled vehicle whose flight trajectory cannot be altered after launch
N Probe	A non-orbital instrumented vehicle to monitor and transmit environmental information
NOTE: The designation listed in the table covers all the guided missiles and rockets used within the Department of Defense. Therefore, all designations listed might not be used by the Navy.	

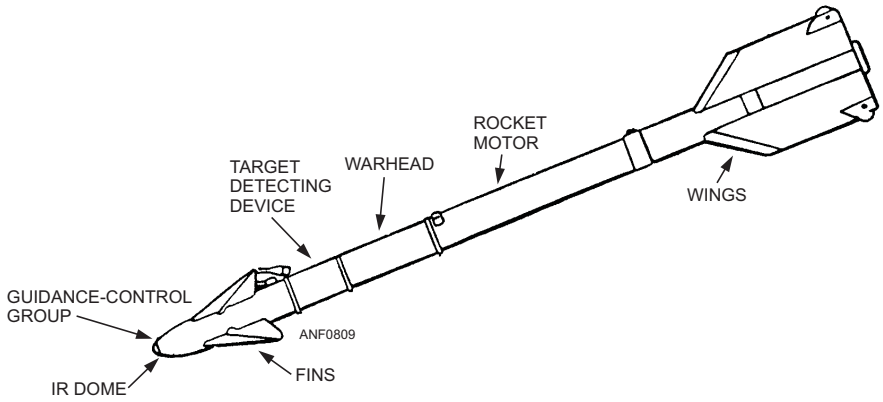

Figure 8-9.—Typical air-to-air guided missile.

BASIC DESIGNATION	MEANING
AGM	Air-launched, surface-attack guided missile
AIM	Air-launched, intercept-aerial guided missile
ATM	Air-launched, training guided missile
RIM	Ship-launched, intercept-aerial guided missile

The basic designators are followed by a design number; this may be followed by a modification symbol of consecutive letters. A designation of AGM-45C is identified as follows:

A—Air-launched

G—Surface-attack

M—Guided missile

45—Forty-fifth missile design

C—Third revision of the forty-fifth design

Most guided missiles are given popular names, such as Sparrow, Sidewinder, Harpoon, and HARM. These names are kept regardless of later modifications to the original missile.

The external surfaces of all Navy guided missiles (except radomes and antenna items) are painted white. The color white has no identification color-coding significance when used on guided missiles. There are three significant color codes used on guided missiles—yellow, brown, and blue. These color codes indicate the explosive hazard contained within the missile component.

Guided missiles are made up of a series of subassemblies (fig. 8-9 and fig. 8-10). The subassemblies, related by function, form a major section of the overall missile. These sections operate a system such as guidance, control, armament (warhead and fuzing), or propulsion. The major sections are carefully connected to form the complete missile assembly. The arrangement of major sections in the missile assembly varies in missiles, depending on missile type.

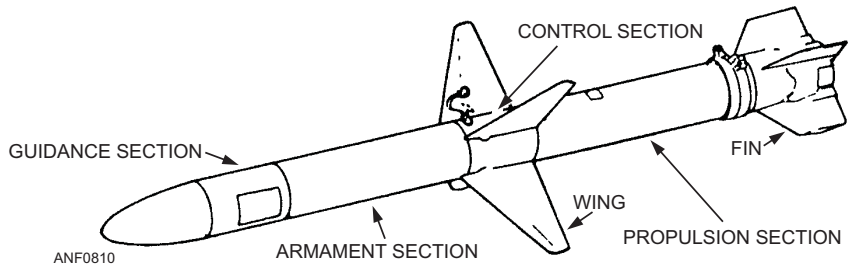

Figure 8-10.—Typical air-to-surface guided missile.

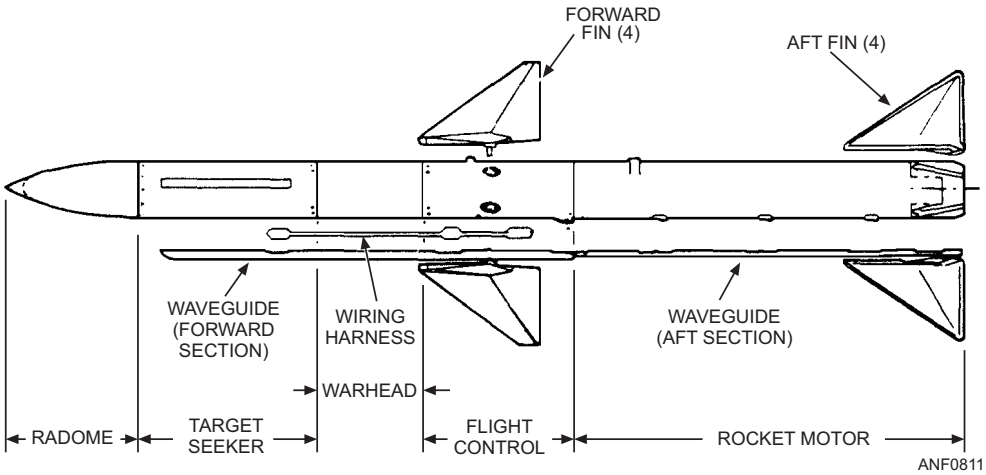

Figure 8-11.—AIM-7F Sparrow III guided missile.

Several of the guided missiles now in use by the Navy are discussed briefly in the following paragraphs.

Sparrow III

The AIM-7F Sparrow III guided missile (fig. 8-11) is a medium-range, all weather, supersonic, air-to-air missile. It is designed to be rail or ejection launched from an interceptor aircraft. The tactical mission of the missile is to intercept and destroy enemy aircraft in all weather environments. It is launched from the F-14 *Tomcat* and F/A-18 *Hornet* aircraft. Excluding the radome, the missile body is made of four sectional tubular shells that house the four major functional components. The four major functional components are the target seeker, flight control, warhead, and rocket motor. The missile is 12 feet (142 inches) long, 8 inches in diameter, and weighs 510 pounds.

Harpoon

The AGM-84A-1 Harpoon surface-attack guided missile (fig. 8-12) is an all-weather, air-launch, antiship attack weapon. It is launched from the P-3 *Orion* and S-3 *Viking* aircraft. The missile consists of the guidance section, warhead section, sustainer section, and boat-tail section. It also contains wings and control fins.

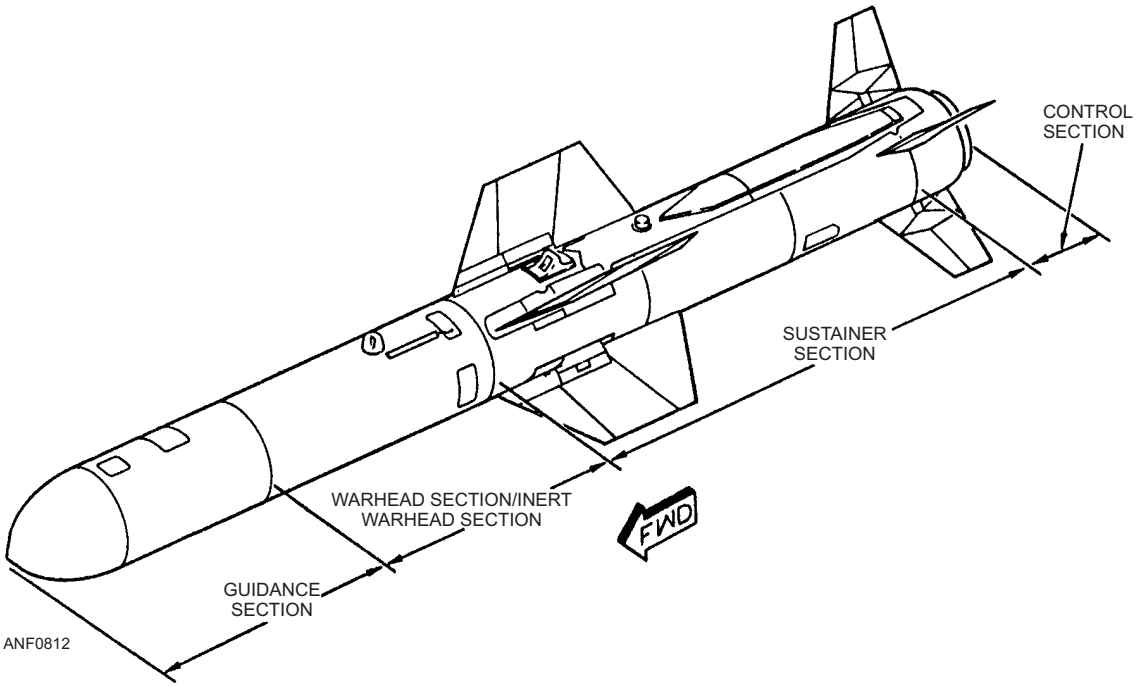

Figure 8-12.—AGM-84A-1 Harpoon guided missile.

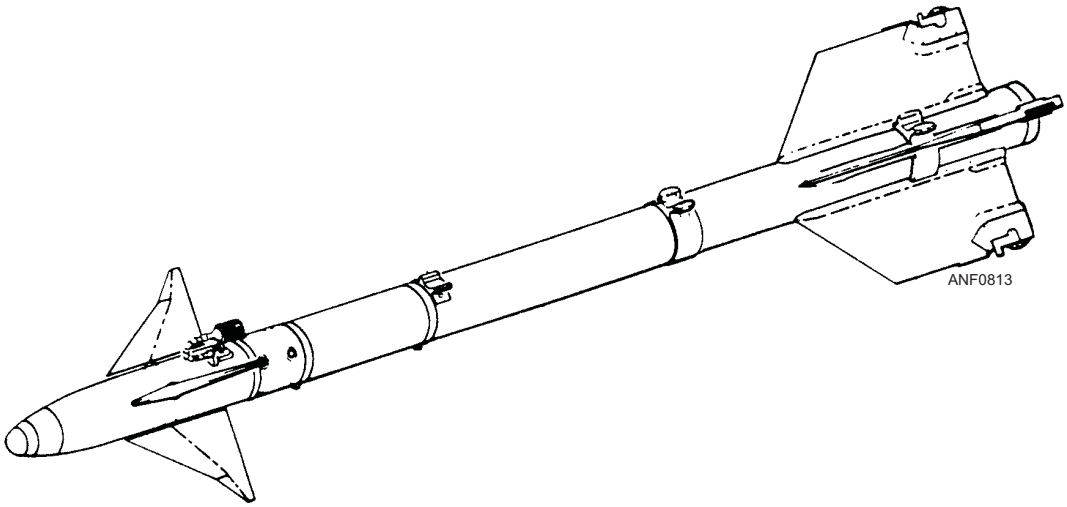

Figure 8-13.—AIM-9M Sidewinder guided missile.

The missile has a low-level cruise trajectory with over-the-horizon range, making it less susceptible to radar detection. It uses active guidance and has counter-countermeasure capability. The missile is 12 1/2 feet (151 inches) long and weighs 1,144 pounds.

Sidewinder

The AIM-9M Sidewinder guided missile (fig. 8-13) is a short-range, supersonic, air-to-air weapon. It has passive infrared target detection, proportional navigation guidance, and a torque-balance control system. The Sidewinder is comprised of five major components. These are the guidance and control section, the target detector section, the safety-arming device, the warhead section, and the rocket motor section. The missile is capable of being launched from the F-14 *Tomcat* and F/A-18 *Hornet* aircraft. The only assembly required at fleet level is the installation of the wings and control fins. The Sidewinder is 9 1/2 feet (113 inches) long, 5 inches in diameter, and weighs 190 pounds.

Phoenix

The AIM-54C/D Phoenix (fig. 8-14) is an air-to-air guided missile. It employs active, semi-active, and passive homing capabilities. The Phoenix is a long-range air intercept missile launched from the F-14 *Tomcat* aircraft. The missile may be launched in multiple missile attacks against groups of aircraft or a single aircraft. A maximum of six AIM-54C/D missiles can be launched from a single aircraft with simultaneous guidance against widely separated targets. In addition, the missile has dogfight, electronic counter-countermeasures, and anti-cruise missile capabilities.

The Phoenix consists of the guidance section, the armament section, the propulsion section, and the control section. The only assembly required at fleet level is the installation of wing and fin assemblies. The missile is 13 feet (156 inches) long, 15 inches in diameter, and weighs 1,020 pounds.

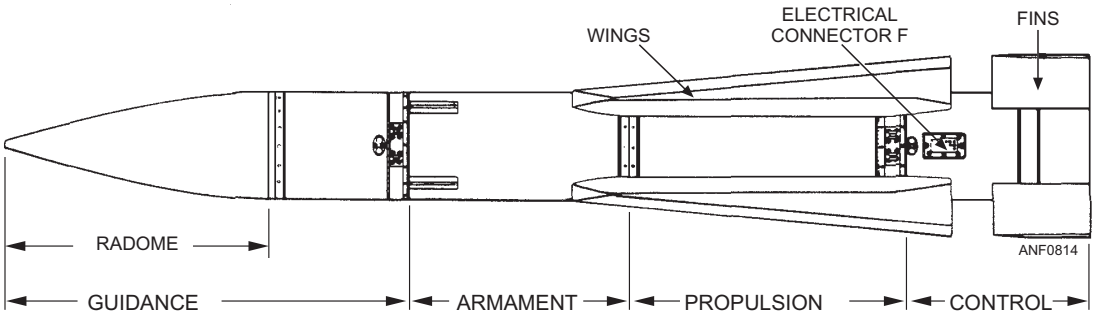

Figure 8-14.—AIM-54C/D Phoenix guided missile.

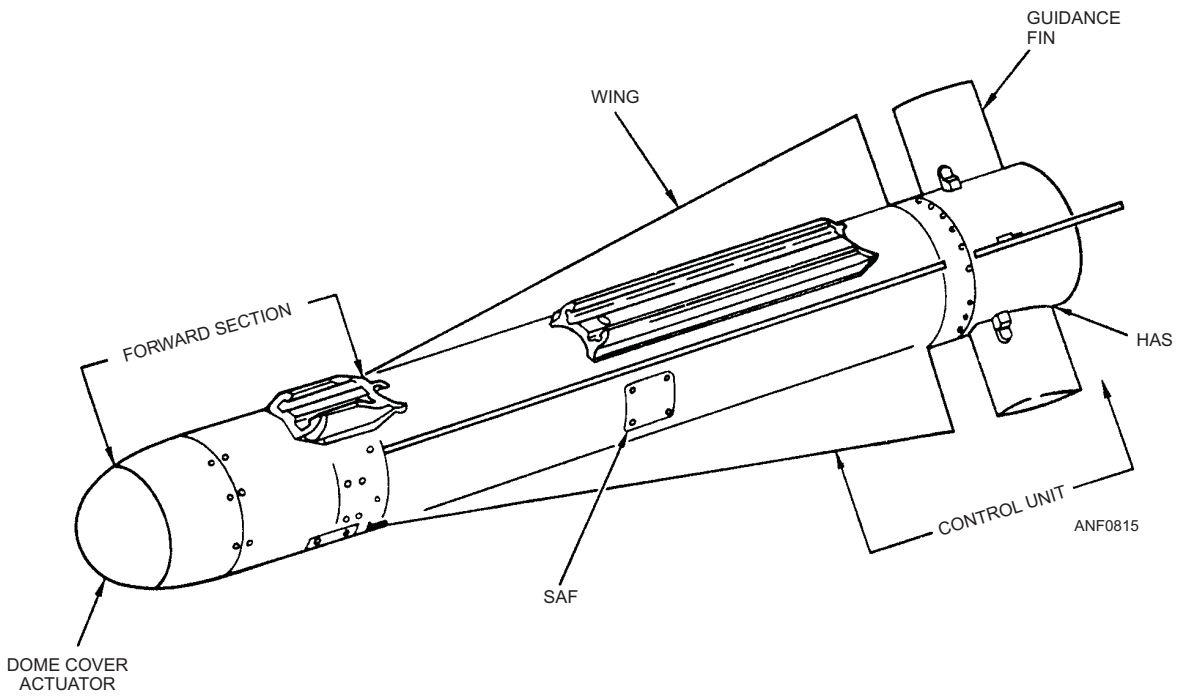

Figure 8-15.—AGM-65E/F Maverick guided missile.

Maverick

The AGM-65E (laser) and AGM-65F (infrared) (fig. 8-15) are guided, rocket-propelled, air-to-ground missiles that are designed for use against fortified ground installations, armored vehicles, and surface combatants. The Maverick consists of two major sections—the guidance and control section and the center/aft section. The Maverick is compatible with the AV-8 *Harrier* and F/A-18 *Hornet* aircraft. The only assembly required at fleet level is the installation of the fins.

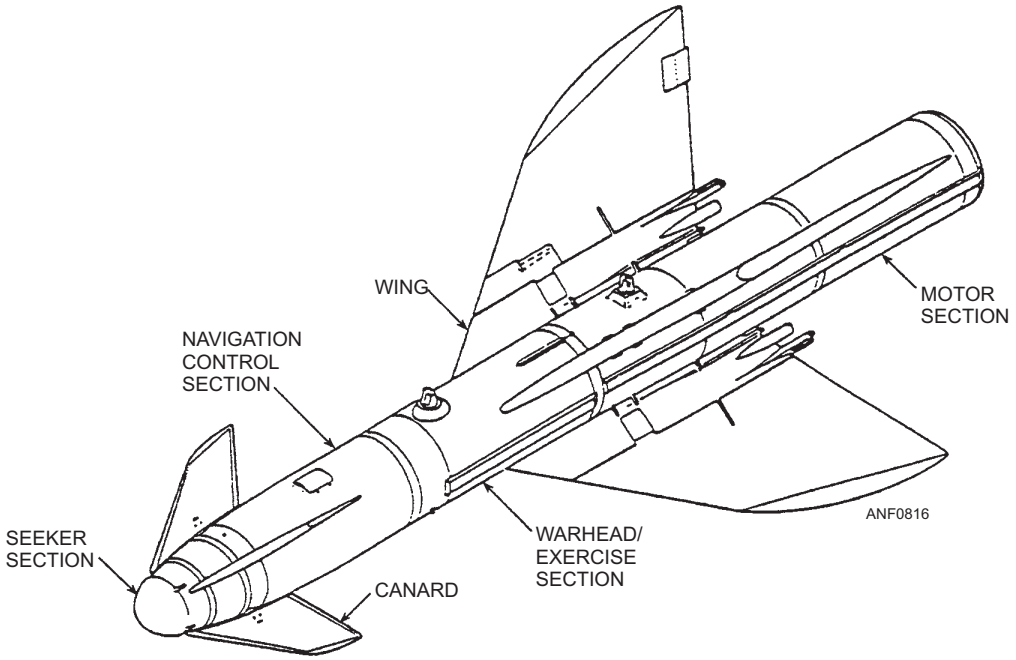

Figure 8-16.—AGM-119B Penguin guided missile.

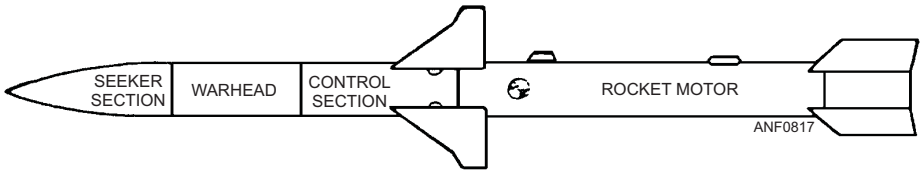

Figure 8-17.—AGM-88A HARM guided missile.

Penguin

The AGM-119B Penguin (fig. 8-16) is a short-to-medium range, inertialy guided, infrared terminal homing, air-to-surface missile. It is used against ships and surfaced submarines. The Penguin consists of the following components—a seeker, navigation and control section, warhead, rocket motor, four folding wings, and four canards. The missile is designed to be launched from helicopters at low speeds and low altitudes.

High-Speed Antiradiation Missile (HARM)

The AGM-88A HARM (fig. 8-17) is a supersonic, terminal homing, air-to-ground missile. It is used primarily against ground radar installations, and it has the capability of selecting a single target from a number of targets in the environment. The missile has four major sections—guidance, control, warhead, and rocket motor. It is capable of being launched from the F/A-18 *Hornet* aircraft.

Advanced Medium Range Air-to-Air Missile (AMRAAM)

The AIM-120 (AMRAAM) missile is an advanced missile system (fig. 8-18) that provides significant performance and reliability improvements over the existing Sparrow missile. The AMRAAM is an all-weather, radar-guided missile. It provides fighter aircraft with precision medium-range attack against airborne targets. The missile is divided into four major sections: guidance, warhead, propulsion, and control. The missile can be launched from the F-14 and F/A-18 aircraft.

Walleye Guided Weapon

The Walleye guided weapon does not contain a propulsion system as do other guided missiles. It is classified as a missile because it has a guidance system, a control system, and externally mounted control surfaces.

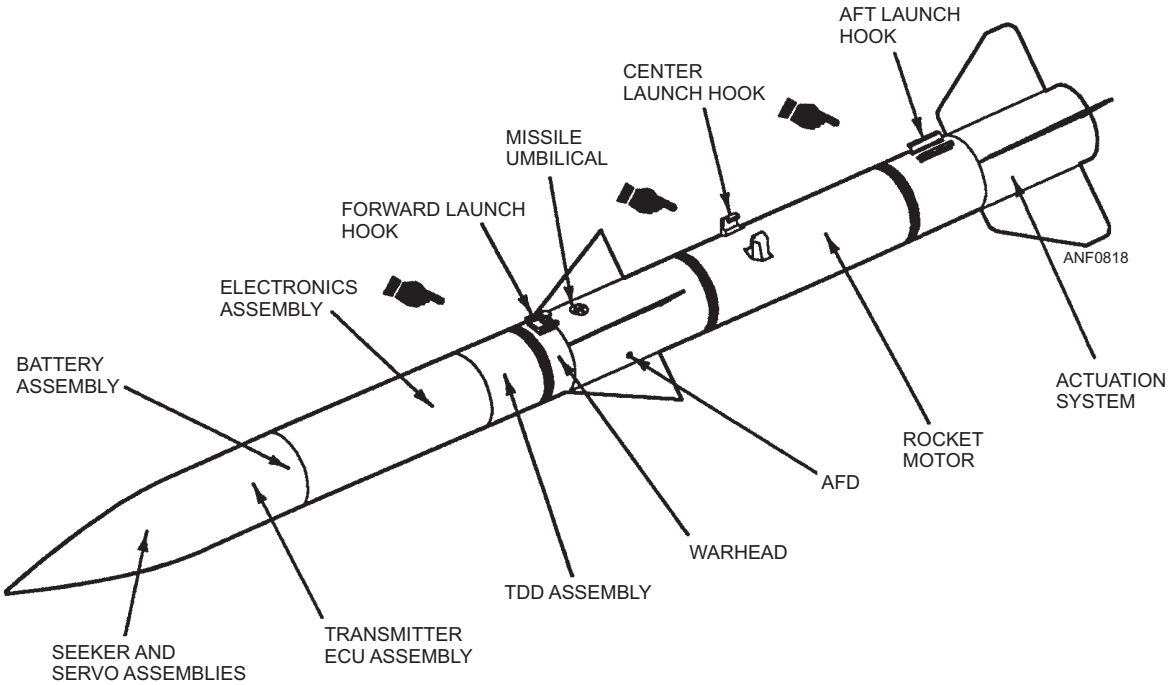

Figure 8-18.—AIM-120 (AMRAAM) guided missile.

The Walleye (fig. 8-19) is a self-contained, self-guided, high explosive weapon. It is grouped into three basic series of weapons—Walleye I (small-scale, 1,000 pounds), Walleye II (large-scale, 2,000 pounds), and Walleye II Extended Range Data Link (ERDL).

UNDERWATER WEAPONS

Since World War II, the Navy has placed major emphasis on the development of air-launched torpedoes and air-laid mines. These weapons incorporate components so sensitive that their operation is protected as classified information. Therefore, the unclassified information we can provide on these weapons is limited.

Torpedoes

The Mk 46 torpedo is the primary weapon used in antisubmarine warfare (ASW). It is designed to search for, detect, attack, and destroy submarines. The torpedo can be assembled into exercise configurations, and it can be used for training.

The tactical torpedo consists of a nose section, warhead, control group, long fuel tank, and after-body. The physical characteristics (such as weight, length, and other features) vary with the configuration and the launch accessories attached. The Mk 46 torpedo can be configured with aircraft launch accessories for either helicopter or fixed-wing aircraft launching.

Aircraft-Laid Mines

Naval mines may be used in either offensive or defensive mining operations. In either case, the primary objective is to defend or control straits, port approaches, convoy anchorage, and seaward coastal barriers.

Aircraft mine delivery has been the principal method for large-scale mining attacks into enemy coastal and port areas. Mines that are delivered by aircraft are usually carried and dropped in much the same manner as bombs. Mines have different ballistic flight paths than bombs. Air-laid mines usually require parachutes.

Q8-13. What are the two types of rockets used by the Navy?

Q8-14. Long-range guided missiles can usually travel at least what distance?

Q8-15. Define the term Mach number.

Q8-16. Guided missiles are classified according to speed. What are the four classifications?

Q8-17. What are the three significant color codes used on guided missiles?

Q8-18. Walleye guided weapons differ from other guided missiles in what way?

Q8-19. What are the basic underwater weapons used by the Navy?

20-MM AUTOMATIC AIRCRAFT GUNS

LEARNING OBJECTIVE: Identify the basic operation, characteristics, and components of the 20-mm automatic aircraft gun.

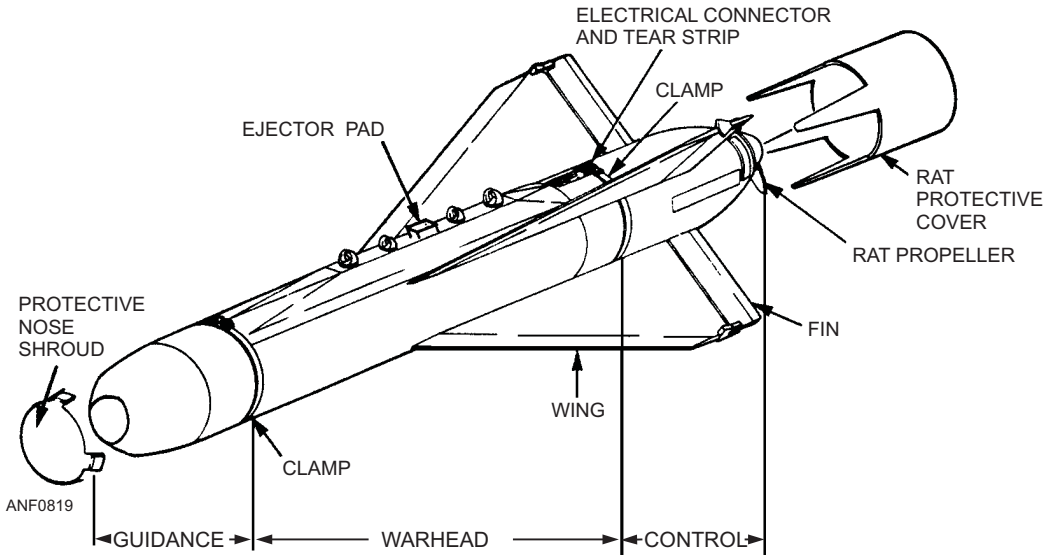

Figure 8-19.—Typical Walleye guided weapon.

Aircraft gun systems have changed significantly over the years. The Navy's high-speed, computer-controlled gun systems are almost futuristic when compared to the mounted machine guns used on the biplanes of the early 1900's. The old Mk 12, 20-mm aircraft gun installed in the A-4 aircraft and operated by a gas-blowback system is primitive by today's standards. Today's gun systems must meet demanding performance requirements and provide the firepower needed to penetrate and destroy advanced enemy targets. The M61A1, 20-mm automatic gun system is the most widely used gun system in Navy aircraft.

The M61A1 20-mm automatic aircraft gun (fig. 8-20) is a six-barrel rotary-action mechanism based on the early Gattling gun. It is a revolving cluster of barrels fired once per each revolution. The gun is hydraulically driven and electrically controlled by the aircraft's weapons control systems. The gun is capable of firing 4,000 to 7,200 rounds of M50 (series) ammunition per minute. As installed in Navy aircraft, the gun has two pilot-selectable firing rates of 4,000 (gun low) or 6,000 (gun high) rounds per minute.

Ammunition is supplied to the gun by the ammunition handling and storage system. The system is an endless conveyor belt (closed loop). Ammunition is transported from the ammunition drum to the gun, and expended casings and unfired rounds are returned to the drum. Although the component's physical location may vary between gun installations, the function and operation of the system are basically the same.

Q8-20. What is the most widely used gun system in Navy aircraft?

SIGNALING, MARKING, AND ILLUMINATION DEVICES

LEARNING OBJECTIVE: Identify the types, uses, and basic characteristics of signaling, marking, and illumination devices.

Signaling, marking, and illumination devices are used by the Navy for various purposes. Some are used as signals by downed aircraft, while others are launched by aircraft.

PYROTECHNICS

Pyrotechnics are "fireworks adapted to military use." The word *pyrotechny* means "the art of fire." Pyrotechnics are items that produce their effect by burning and are consumed in the process. As used in the military, pyrotechnics are burning items that produce a bright light for illumination. They also produce colored lights or signaling smoke. All of the pyrotechnic devices described here contain combustible chemicals, which when ignited produce a flame, flash, smoke, or a combination of these effects. Because of the many pyrotechnics available, only those items that an Airman may see on a routine basis are covered.

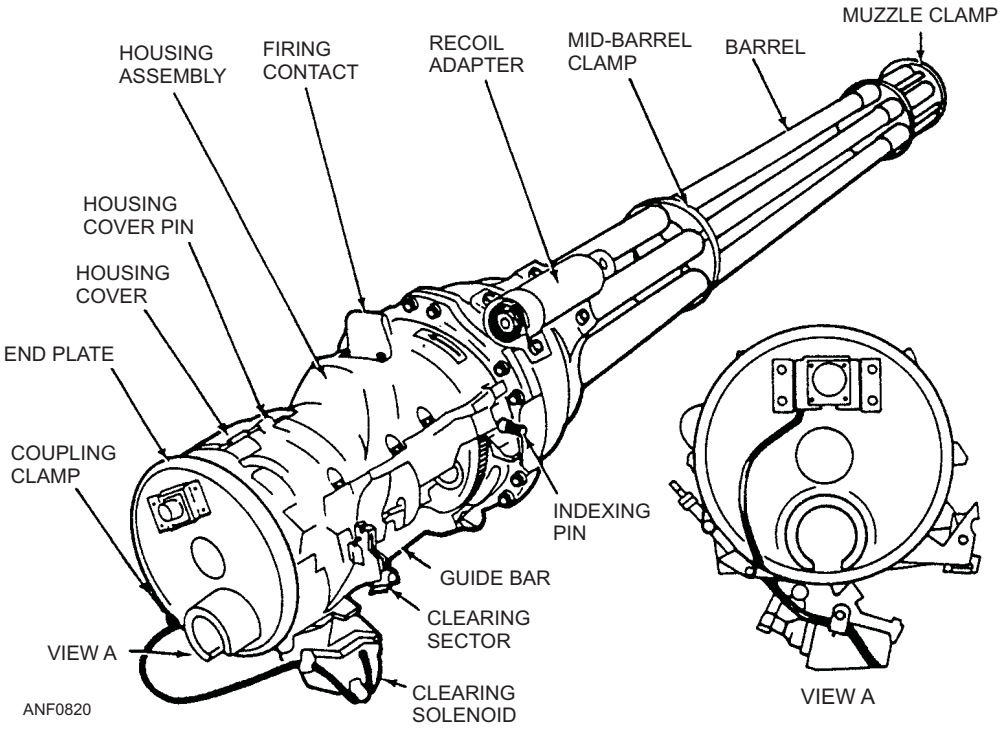

Figure 8-20.—M61A1 20-mm automatic aircraft gun.

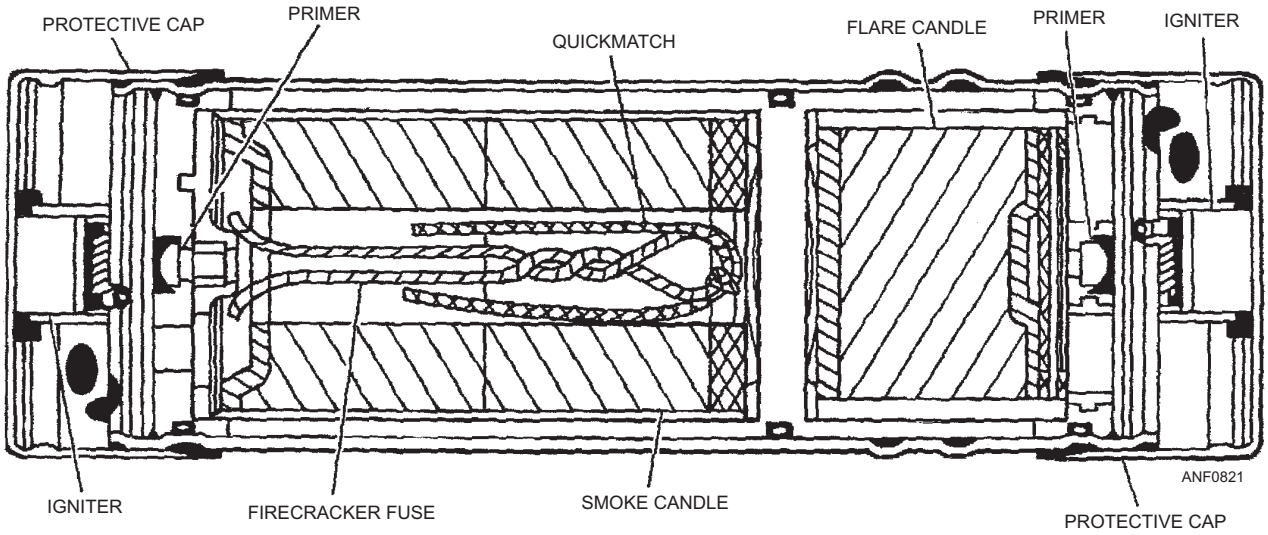

Figure 8-21.—Mk 124 Mod 0 marine smoke and illumination signal.

HAND-HELD SIGNALING DEVICES

Hand-held signaling devices are used for signaling or for reference point marking for downed aircrew and personnel in distress over land or at sea.

Mk 124 Mod 0 Marine Smoke and Illumination Signal

The Mk 124 Mod 0 marine smoke and illumination signal (fig. 8-21) is used for either day or night

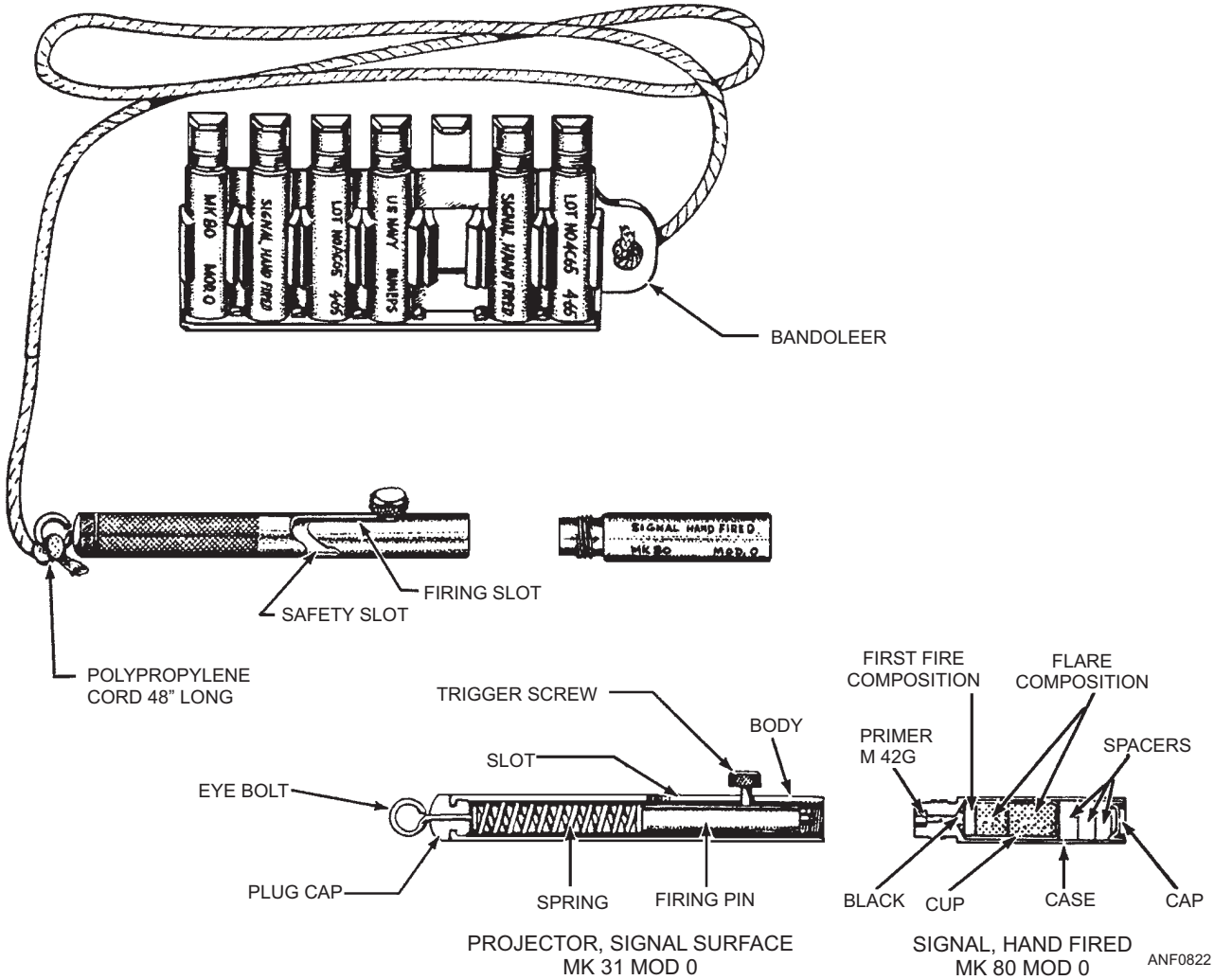

Figure 8-22.—Mk 79 Mod 0 illumination signal kit.

signaling by personnel on land or sea. It is a one hand operable device that emits orange smoke for daytime use and red flare for nighttime use. Burning time for each end is about 20 seconds. Each end has protective plastic caps. The night end has two prominent raised bead circles on the casing that positively identify this end, by the sense of touch, for nighttime use. A label on the outer surface around the whole body of the signal further identifies the smoke (day) and flare (night) ends. The label also gives detailed instructions on how to use the signal.

Mk 79 Mod 0 Illumination Signal Kit

The Mk 79 Mod 0 illumination signal kit (fig. 8-22) contains a Mk 31 Mod 0 signal projector, a plastic bandoleer that holds seven Mk 80 Mod 0 signals, and an instruction sheet. The kit is designed for use as a distress signaling device. It is small and lightweight for carrying in flight suit pockets or life rafts. The projector aims and fires the signals. Each signal contains a single red star. On activation, this star is propelled upward to a height of 250 to 650 feet. The star burns for at least 4 1/2 seconds.

AIRCRAFT-LAUNCHED ILLUMINATION DEVICES

The devices discussed in this section are designed to be launched or dropped from aircraft.

LUU-2 Aircraft Parachute Flare

The LUU-2 aircraft parachute flare (fig. 8-23) is used for nighttime illumination of surface areas in search and attack operations. The flare consists of a candle, parachute assembly, and fuze, which are all encased in a cylindrical aluminum container.

The LUU-2 flare is launched from an external launching system, such as a bomb rack or by hand, from an aircraft. The method most often used is the dispenser-launch method. Regardless of the method of launching, exerting pull on the fuze lanyard starts flare operation. After a predetermined delay, a small explosive charge detonates, expelling the candle and parachute from the container. On opening, the main parachute exerts pull on the cables of the suspension/ignition system, igniting the candle. The candle produces about 2 million candlepower.

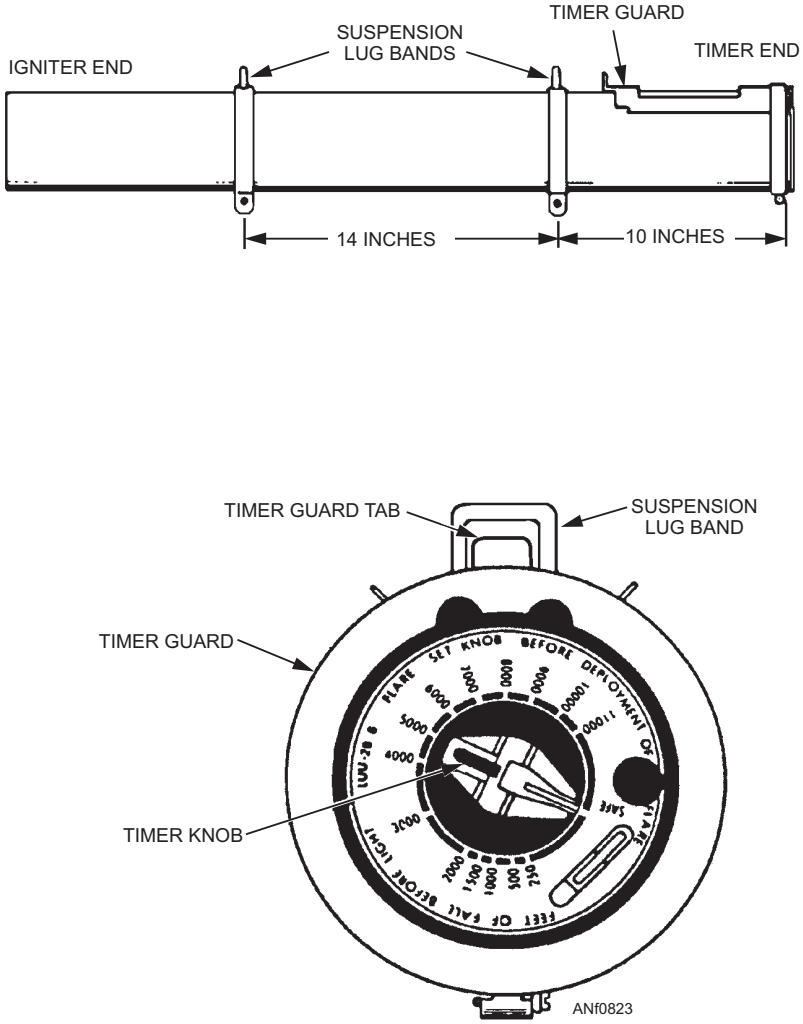

Figure 8-23.—LUU-2 aircraft parachute flare with drogue tray.

Mk 25 Marine Location Marker

The Mk 25 marine location marker (fig. 8-24) is launched from aircraft or surface craft. It is primarily launched from aircraft to provide day or night reference points in marking the course of enemy submarines. It is suitable for any type of sea-surface reference-point marking that calls for both smoke and flame for 10 to 20 minutes.

Mk 58 Mod 1 Marine Location Marker

The Mk 58 Mod 1 marine location marker (fig. 8-25) is used for long burning, smoke and flame reference-point marking on the ocean's surface. In addition to being used for antisubmarine warfare, it is also used for search and rescue operations. It is also used for man-overboard markings and to provide a target for practice bombing at sea. This marker produces a yellow flame and white smoke for 40 to 60 minutes. The marker is visible from an aircraft for at least 3 miles under normal operating conditions.

Q8-21. Define pyrotechnics as used in the military.

Q8-22. What are the two hand-held signaling devices used by downed aircrew and personnel in distress over land or at sea?

Q8-23. The Mk 25 Mod 0 aircraft parachute flare is used for what purpose?

Q8-24. The Mk 58 Mod 1 Marine location marker is used for what purpose?

CARTRIDGES AND CARTRIDGE-ACTUATED DEVICES (CADs)

LEARNING OBJECTIVE: Identify the types, uses, and basic characteristics of cartridges and cartridge-activated devices.

With the advent of the high-performance jet aircraft, aviation relies more and more on CADs. CADs are small explosive-filled cartridges used to fire other explosives or release mechanisms. CADs provide high reliability and easy maintenance. The cartridges undergo rigid quality control throughout design and manufacture. **Their actual performance is dependable only when they have been properly handled and installed**. In a personnel escape system, the CAD must work perfectly the first time. Malfunction of a device or failure to fire when needed usually results in injury or death to the pilot and/or crew members. Escape operations performed by cartridges and CADs are canopy removal, seat ejection, streaming of ejection seat drogue chutes, and parachute opening.

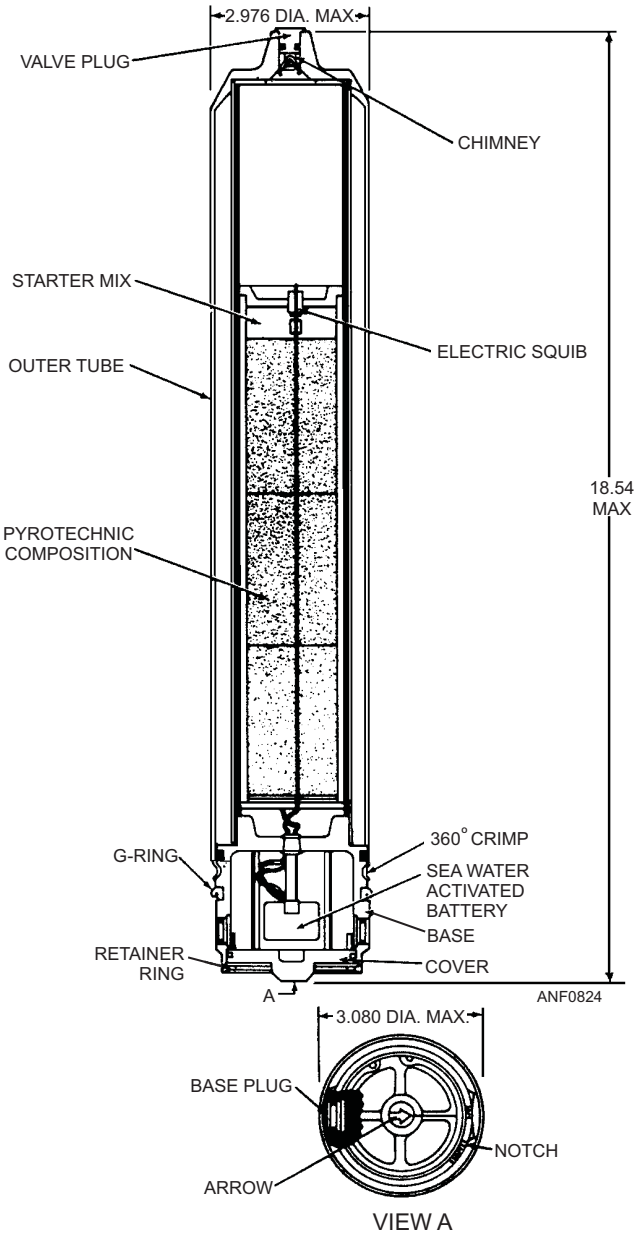

Figure 8-24.—Mk 25 marine location marker.

It is not possible to discuss all the cartridges and CADs in this TRAMAN. Therefore, a few representative cartridge systems are briefly discussed.

PERSONNEL ESCAPE DEVICE CARTRIDGES

High-speed aircraft have many designs, special control features, and space limitations. As a result, a sequence of emergency operations must be carried out before it is possible for pilot and/or crew members to escape. CADs allow several operations to be performed concurrently (at the same time), or in rapid sequence, to

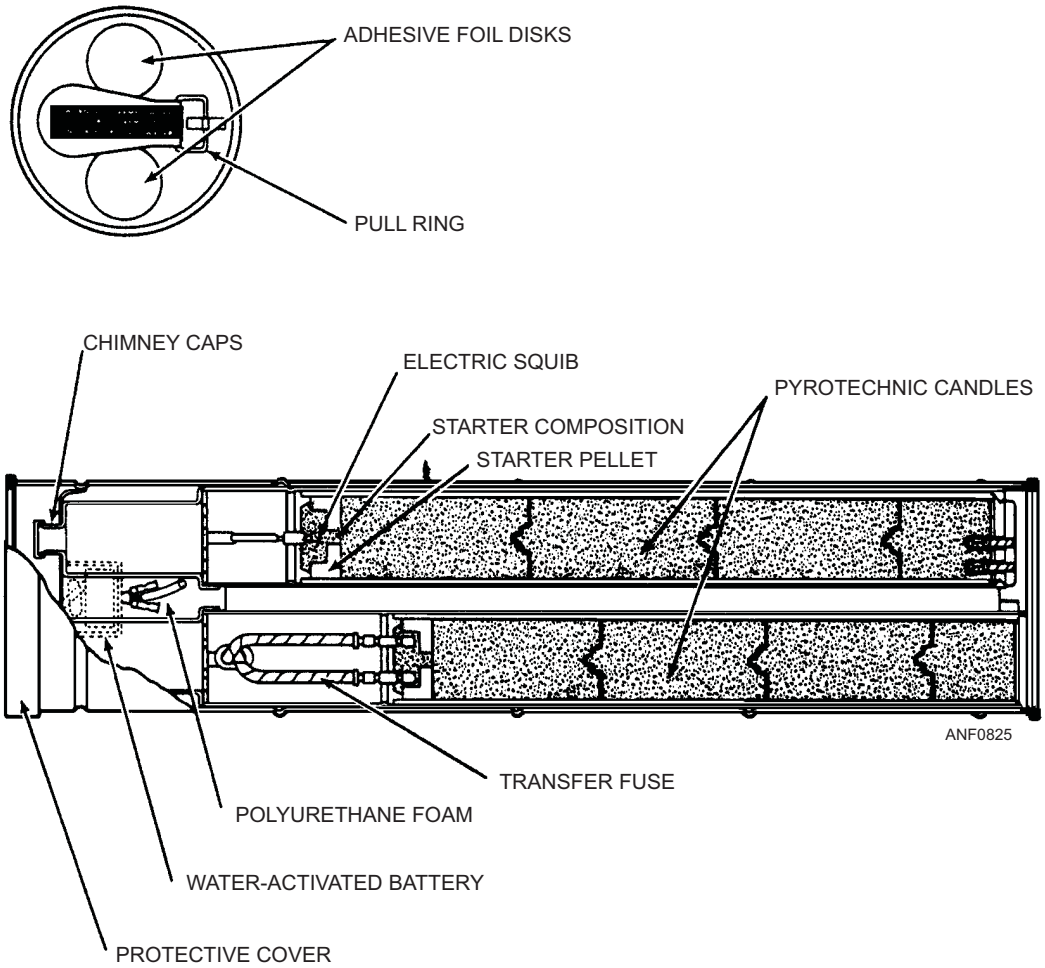

Figure 8-25.—Mk 58 Mod 1 marine location marker.

ensure personnel escape. Personnel in the AME rating usually install cartridges and CADs used in personnel escape systems.

IMPULSE AND DELAY CARTRIDGES

Impulse cartridges are used as power sources in aircraft stores release and ejection systems. The cartridges provide a force to free or eject a store away from the aircraft or to operate other devices.

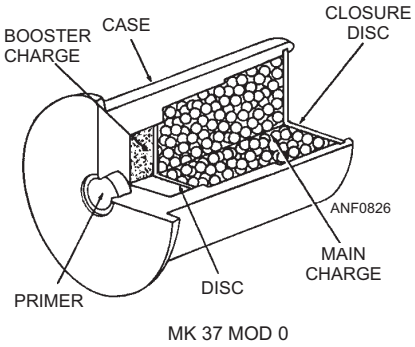

Figure 8-26.—Typical impulse cartridge used in personnel escape systems.

The impulse cartridge (fig. 8-26) contains an electric primer, a booster, and a main charge. When the cartridge is fired, gas pressure moves a piston and unlocking linkage, freeing and/or ejecting the store from the rack.

CCU-45/B Impulse Cartridge

The CCU-45/B impulse cartridge (fig. 8-27) is used primarily for release and ejection of stores from an aircraft in flight.

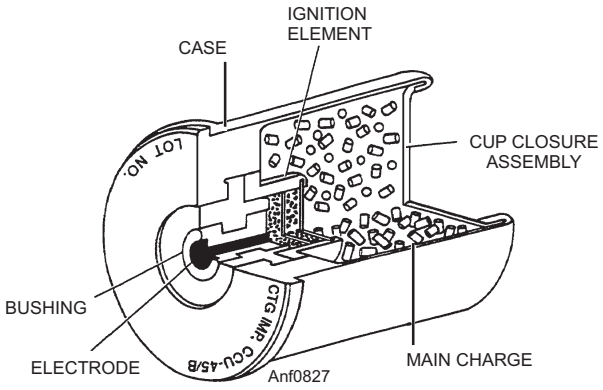

Figure 8-27.—Impulse cartridge CCU-45/B (sectioned).

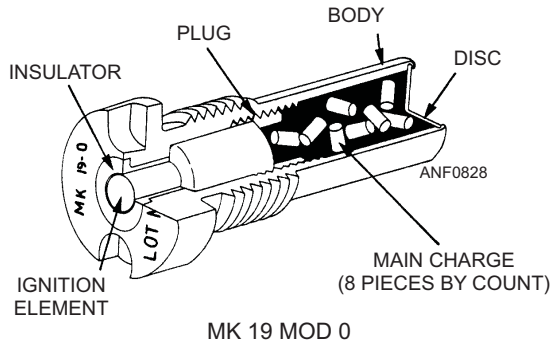

Figure 8-28.—Typical impulse cartridge used in bomb racks, launchers, and dispensers.

Mk 19 Mod 0 Impulse Cartridge

The Mk 19 Mod 0 impulse cartridge (fig. 8-28) is a backup cartridge. It is normally used for the emergency jettison/release of stores loaded on an aircraft during flight. This cartridge is fired after an attempt has been made to fire the primary cartridges.

MISCELLANEOUS CARTRIDGES

Miscellaneous cartridges include cable cutters, explosive bolts, and fire extinguishers.

Mk 97 Mod 0 Impulse Cartridge

The Mk 97 Mod 0 impulse cartridge (fig. 8-29) is used as a power source to actuate a helicopter cable cutter to cut a chain/cable in an emergency.

Mk 1 Mod 3 Impulse Cartridge

The Mk 1 Mod 3 impulse cartridge (fig. 8-30) is used primarily to actuate a refueling hose guillotine in an emergency.

Aircraft Fire-Extinguisher Cartridge

In the event of fire, the aircraft fire extinguisher cartridges start the release of fire-extinguishing agents into the area surrounding an aircraft engine.

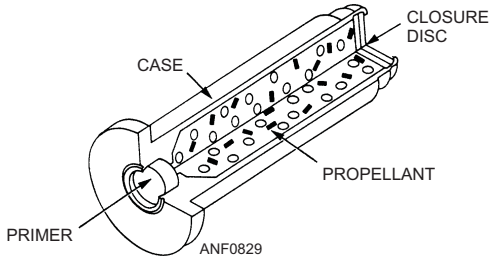

Figure 8-29.—Mk 97 Mod 0 impulse cartridge.

Q8-25. What are some of the escape operations performed by cartridges and CADs?

Q8-26. Personnel in what rating usually install cartridges and CADs used in personnel escape systems?

Q8-27. Cartridges that are used for cable cutters, explosive bolts, and fire extinguishers are known as what type of cartridges?

AIRCRAFT WEAPONS SUSPENSION AND RELEASING EQUIPMENT

LEARNING OBJECTIVE: Identify the types, uses, and basic characteristics of aircraft weapons suspension and releasing equipment.

Naval combat aircraft and weapons use highly complex suspension, arming, and releasing devices. The majority of these devices are electronically operated and are part of the aircraft's electrical circuits. The devices are activated by a hand switch or automatically through a circuit-closing device in the system. Manual operation is possible, if needed.

Current suspension, arming, and releasing devices for aircraft require the use of associated electrical gear. This gear times the release of stores and rack selectors

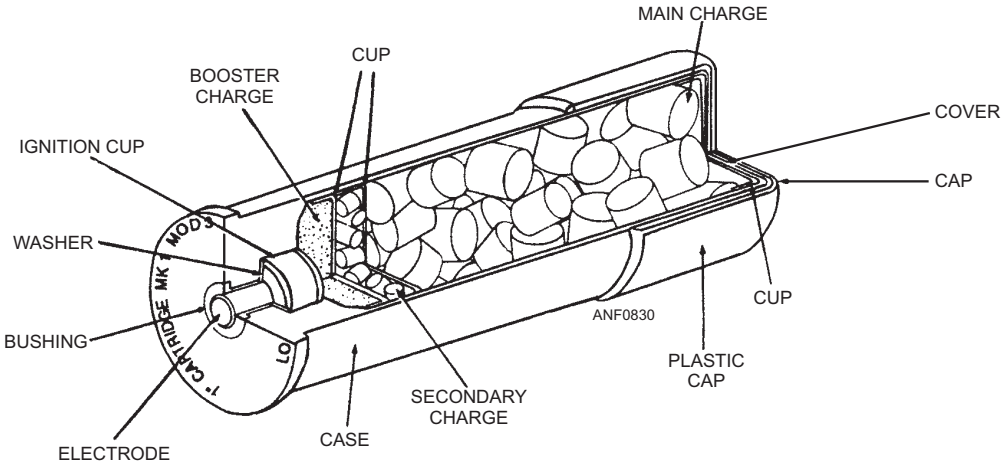

Figure 8-30.—Mk 1 Mod 3 impulse cartridge (sectioned).

to control the pattern of store releases. Other units preselect the desired arming of bomb fuzes. Each serves a definite purpose in accurately delivering weapons against the enemy.

The Navy uses a wide variety of suspension equipment. Suspension equipment is designed to accommodate a certain maximum weight. The structural strength of the aircraft determines the maximum weight that may be suspended. The aircraft weight capacity per rack is usually less than rack design capability.

Several representative types of suspension and releasing equipment are discussed briefly in the following text.

BOMB RACKS

Aircraft bombs, torpedoes, mines, and other stores are suspended either internally or externally by bomb racks. Bomb racks carry, arm, and release these stores.

The BRU-14 (series) bomb rack (fig. 8-31) suspends and releases conventional and nuclear weapons/stores weighing up to 2,200 pounds with a 14-inch suspension. In certain applications, adapter assemblies are added to increase the suspension capacity to 30 inches.

When a weapon/store is loaded onto the bomb rack, the suspension lugs on the weapon/store engage the heel of the bomb rack suspension hooks. This causes the hooks to pivot up and engage the suspension lugs. The hooks are held in the closed position by sears. When the pilot initiates bomb release, an electrical signal is routed through the weapon system circuits to the bomb rack. This signal activates a solenoid that activates the release linkage in the bomb rack. This causes the suspension hooks to open, letting the weapon/store fall away from the aircraft. The BRU-14 has a CAD backup release method if the primary method fails. When the CAD is fired, the release linkage frees the weapon/store.

BOMB EJECTOR RACKS

Bomb ejector racks differ from standard bomb racks. Ejection racks use electrically fired impulse cartridges to open the suspension hook linkage and eject the weapon/store. When in flight, a vacuum can be created under the fuselage and wings of the aircraft. In some cases, this vacuum will prevent the released weapon/store from entering the airstream and falling to the target. Physical contact between the weapon/store and the aircraft structure may result. This could cause damage to or loss of the aircraft. Bomb ejector racks eject the weapon/store from the bomb rack with sufficient force to overcome this vacuum and ensure a safe release.

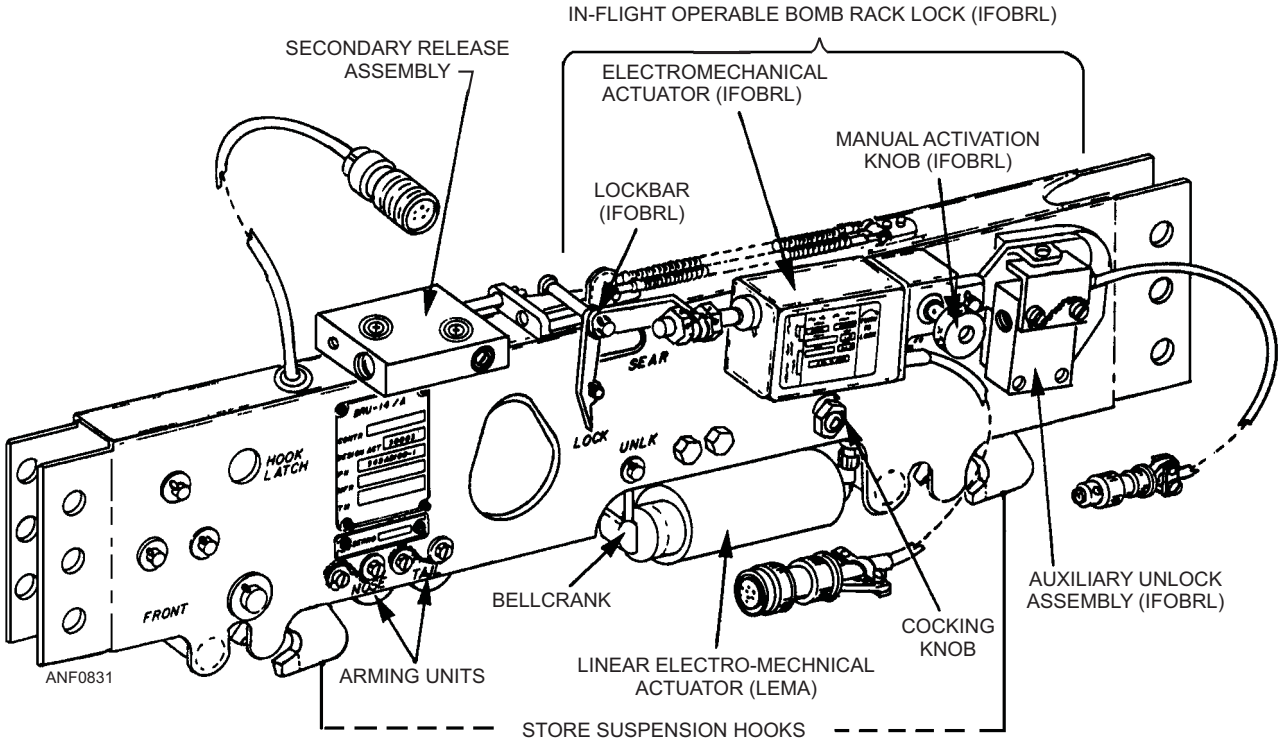

Figure 8-31.—BRU-14 (series) aircraft bomb rack.

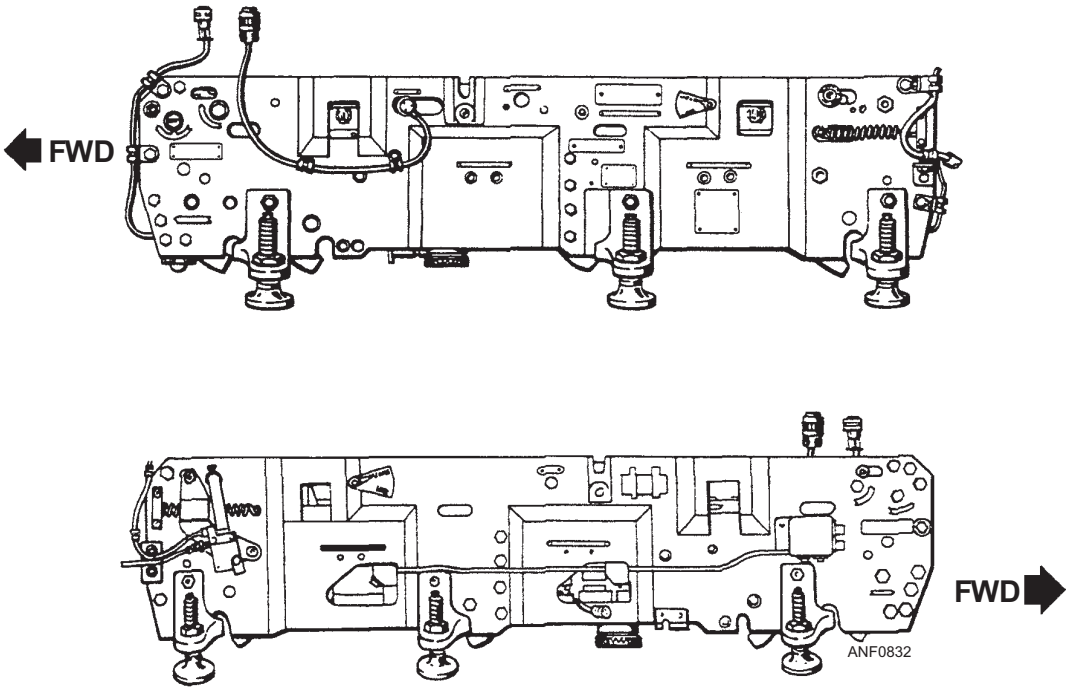

Figure 8-32.—BRU-11A/B bomb ejector rack.

The BRU-11A/B bomb ejector rack (fig. 8-32) has four suspension hooks. Two of these hooks are spaced 14 inches apart and two are spaced 30 inches apart. These hooks carry weapons/stores weighing up to 4,000 pounds. The rack has electrical connections, mechanical and electrical arming units, ejection components, and mechanical linkage for safely suspending and ejecting weapons/stores.

When the pilot fires the impulse cartridges, the resulting gas pressure unlocks the suspension hooks. The gas pressure simultaneously causes the ejection piston and ejector foot to **kick** the weapon/store away from the aircraft. The BRU-11A/B has a secondary weapons/stores jettison release if the primary system fails. The secondary release also uses an impulse cartridge to unlock the suspension hooks, but it does not eject the weapon/store.

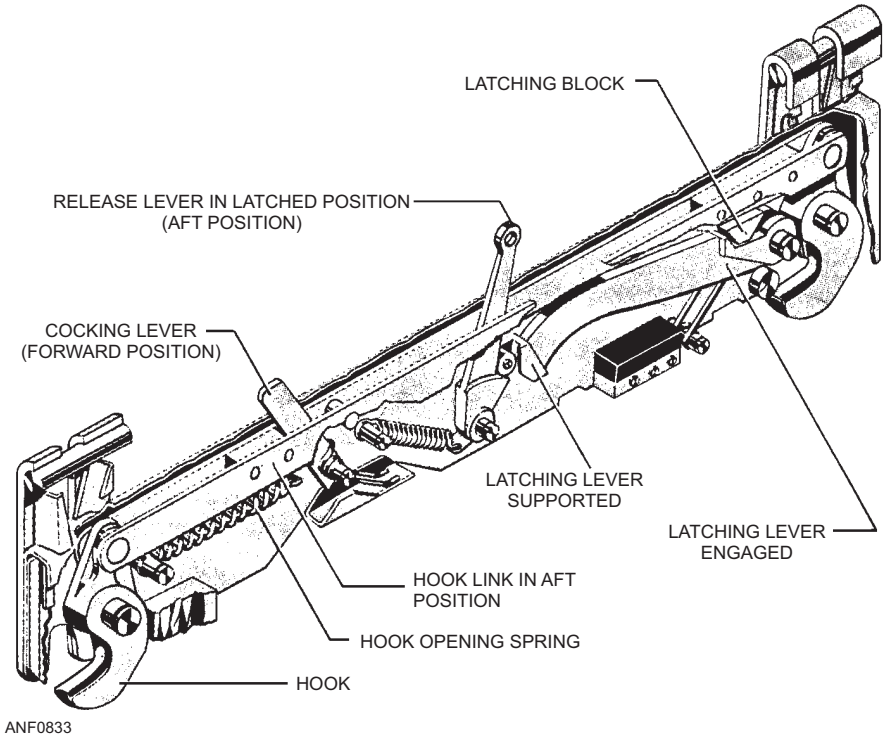

Figure 8-33.—Mk 8 Mod 5 bomb shackle.

BOMB SHACKLES

The Mk 8 Mod 5 bomb shackle (fig. 8-33) is the only bomb shackle now in use. It is used on helicopters. The shackle is used to suspend and release mines or torpedoes that weigh from 100 to a maximum of 1,500 pounds. The shackle has suspension hooks spaced 14 inches apart, center to center. It has no integral provision for electrical release, electrical arming, or mechanical arming. Electrical release of the shackle is possible by attaching an electrical release unit to the shackle structure. Weapons may be mechanically armed by attaching arming solenoids to the shackle or to the aircraft structure.

DISPENSERS AND EJECTORS

Dispensers and ejectors are used during tactical situations to give an aircraft added offensive and defensive capabilities. These units are usually detachable and suspended from other installed suspension equipment, or they are mounted directly to the aircraft. They are used to suspend and release ordnance, such as aircraft parachute flares, chaff, and decoy flares.

SUU-25F/A Flare Dispenser

The SUU-25F/A flare dispenser (fig. 8-34) is capable of suspending and launching eight LUU-2B/B

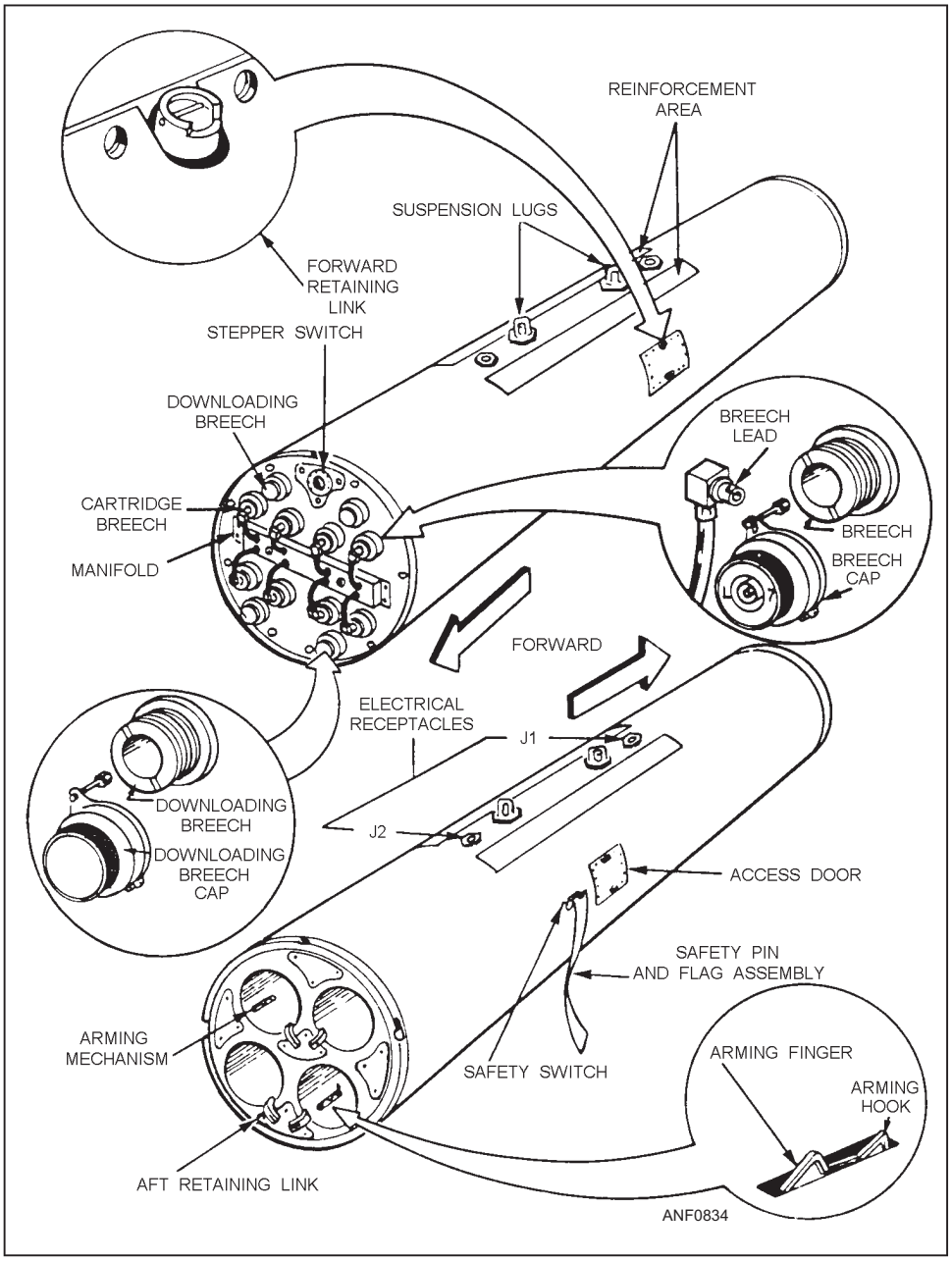

Figure 8-34.—SUU-25F/A flare dispenser.

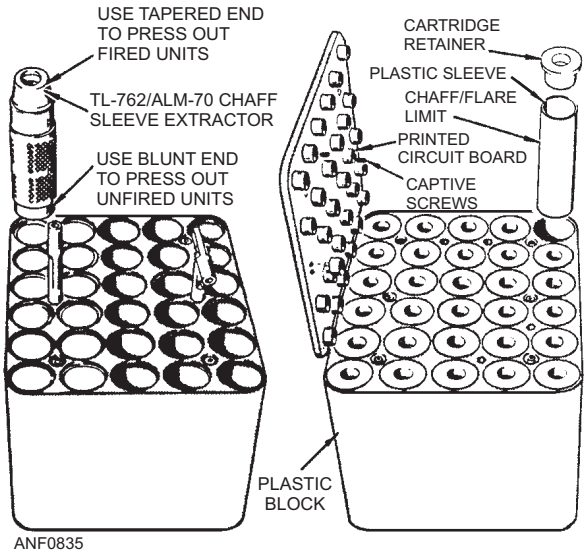

Figure 8-35.—AN/ALE-29A countermeasures chaff dispensing set.

aircraft parachute flares. The SUU-25F/A dispenser is made up of four aluminum tubes housed in a supporting frame and covered with aluminum skin. Each tube is loaded with a pair of flares configured with a flare adapter kit. The dispenser allows the flares to be ejected one at a time, thereby doubling the mission capability over previous models. Each tube has two flares. The forward bulkhead (A) of the dispenser has breech assemblies for eight impulse cartridges (one for each flare). Four aft retaining links (B) attached to the rear bulkhead keeps the aft flares in the dispenser tubes until they are ejected.

When initiated by the pilot, the impulse cartridge in the number 1 breech will be fired. The resulting gas pressure is routed into the launcher tube. Gas pressure buildup will be sufficient enough to force the flare aft and shear the aft retaining lock shear pin, allowing a single flare to be ejected from the launcher tube. A stepper switch automatically steps the firing circuit in the dispenser to the next tube. Each subsequent activation of the firing circuit steps the stepper switch and repeats the process for the remaining tubes.

AN/ALE-29A Countermeasures Chaff Dispensing Set

The AN/ALE-29A countermeasures chaff dispensing set (chaff dispenser) (fig. 8-35) is an electronic device installed in most Navy combat aircraft. The chaff dispenser ejects cartridge-loaded configurations of Mk 46 or MJU-8/B decoy flares and RR-129 or RR-144 chaff.

Decoy flares are used during evasive maneuvers against heat-seeking missiles. Chaff rounds consist of extremely fine shredded metal strips in a cylindrical metal container. When ejected, the metal strips cause a jamming effect against ground-controlled radar installations or radar-controlled missiles.

GUIDED MISSILE LAUNCHERS

A guided missile launcher provides mechanical and electrical means of suspending and air launching a guided missile from an aircraft. The launcher either ejects the missile or the missile leaves the launcher rails under its own power. Each of these type launchers is discussed briefly in the following text.

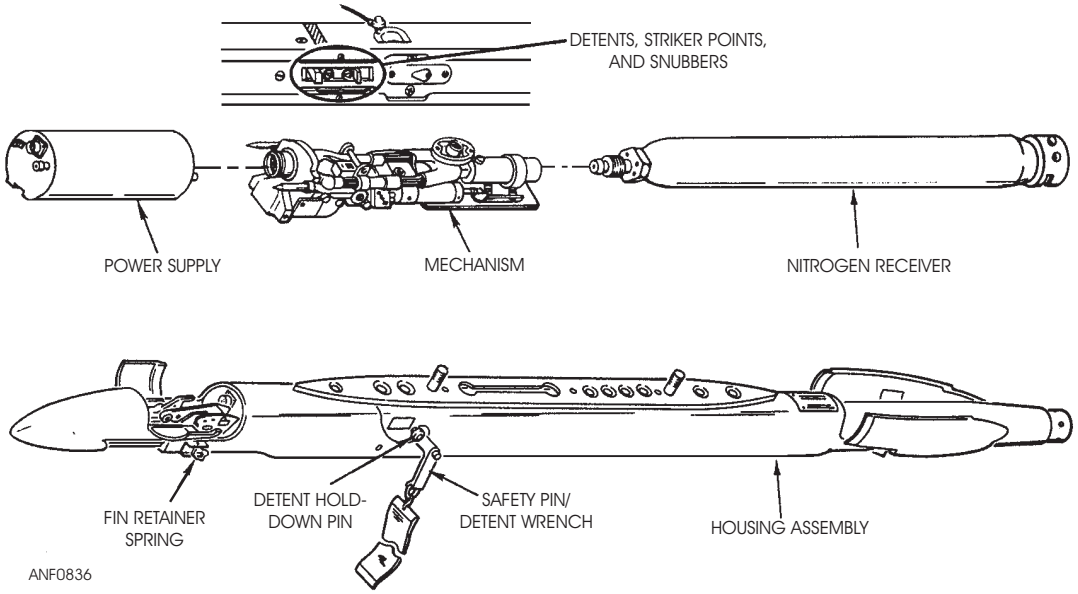

Figure 8-36.—LAU-7/A (series) guided missile launcher.

LAU-7/A Guided Missile Launcher

The LAU-7/A (series) guided missile launcher (fig. 8-36) is a reusable launcher system for use with AIM-9 Sidewinder missiles. The launcher has four major assemblies—the housing assembly, the nitrogen receiver assembly, the mechanism assembly, and the power supply.

LAU-92/A Guided Missile Launcher

The LAU-92/A guided missile launcher (fig. 8-37) is a self-contained, gas operating mechanism. It carries, retains, and ejection-launches the Sparrow III missile.

Launcher unlocking and ejection force is supplied by two Mk 124 Mod 0 impulse cartridges installed in the breeches. The cartridges are ignited by an electrical impulse from the aircraft firing circuits.

AIRCRAFT ROCKET LAUNCHERS

Aircraft rocket launchers (rocket pods) are a platform from which airborne rockets can be fired. Rocket pods contain rocket motors and, in some cases, completely assembled rounds. Each may use the same container from manufacture, through stowage, to final firing.

Aircraft rocket launchers are classified as either 2.75-inch (fig. 8-38, view A) or 5.0-inch (fig. 8-38, view B) and either reusable or non-reusable. Metal launcher tubes are reusable. Paper launcher tubes are designed for onetime use only, and are jettisoned by the pilot after use.

The 2.75-inch rocket launchers now in use are the LAU-61/A (19 shot), LAU-68/A (7 shot), and the LAU-69/A (19 shot). The 5.0-inch rocket launchers are the LAU-10 series (4 shot).

Q8-28. What is the purpose of ordnance suspension and releasing equipment?

Q8-29. What is the purpose of bomb racks?

Q8-30. The Mk 8 Mod 5 bomb shackle is used on what type of aircraft?

Q8-31. What is the purpose of dispenser and ejector equipment?

Q8-32. What guided missile launcher is used with the AIM-9 Sidewinder missile?

SUMMARY

In this chapter, you have identified the different types of ammunition, materials, operation, and hazards associated with aircraft ordnance. You have also become familiar with some of the responsibilities of the Aviation Ordnanceman.

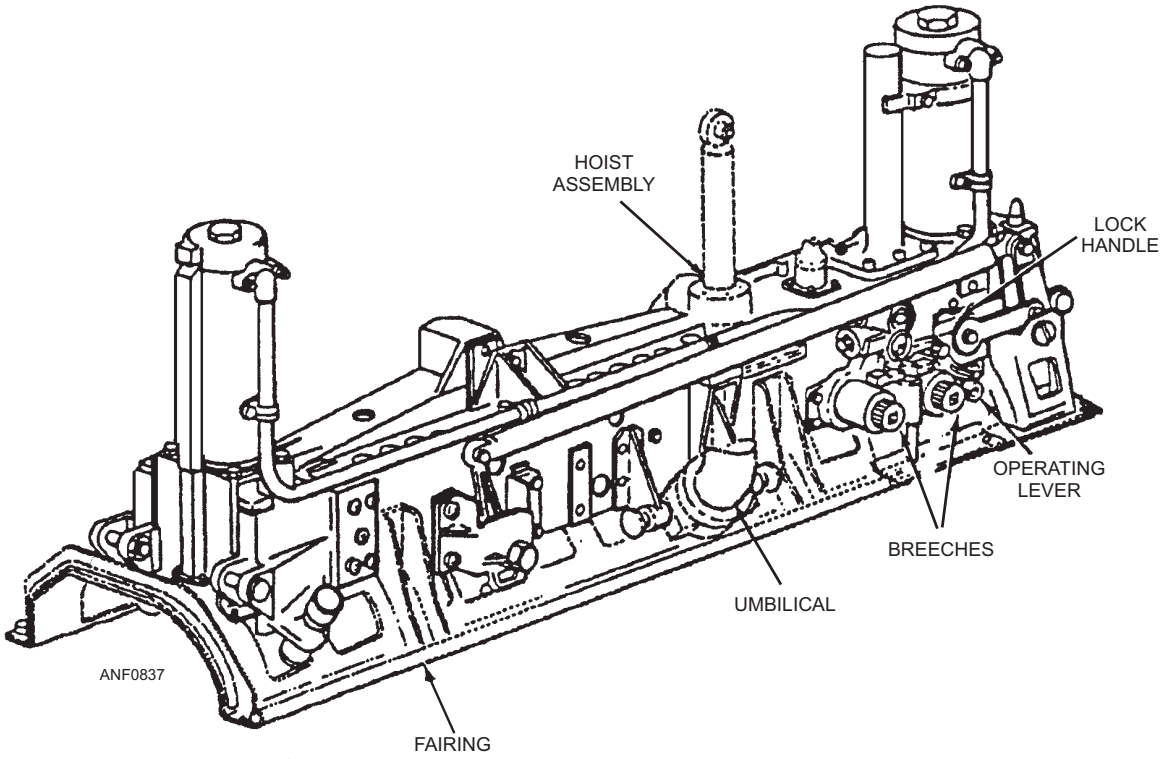

Figure 8-37.—LAU-92/A guided missile launcher.

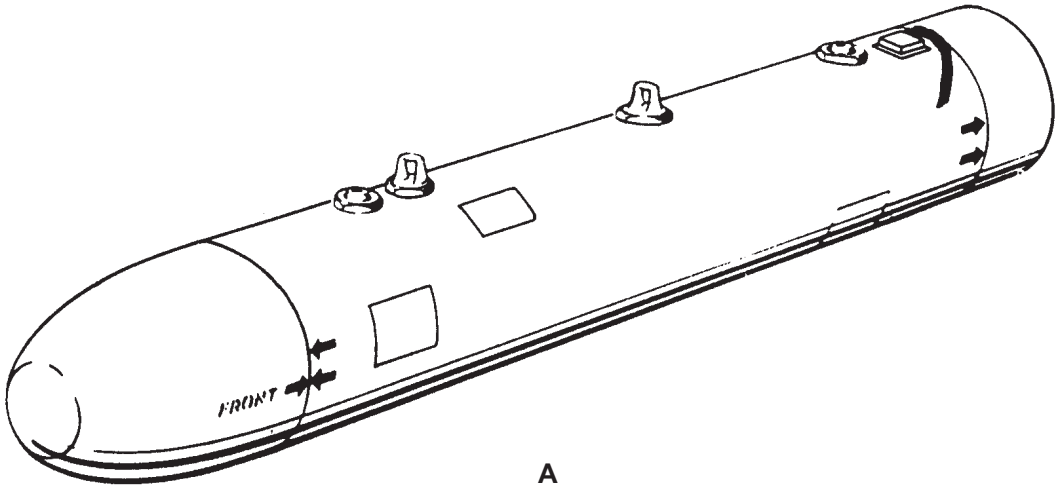

A

2.75-INCH

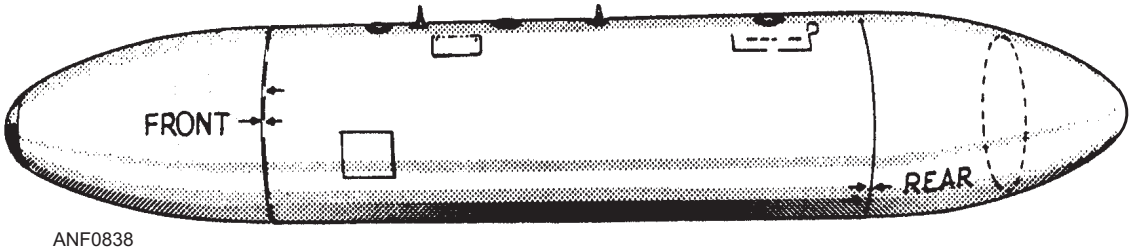

B

5.0-INCH

Figure 8-38.—Typical airborne rocket launcher configurations.

ASSIGNMENT 8

Textbook Assignment: "Aircraft Ordnance," chapter 8, pages 8-1 through 8-30.

8-1. Which of the following types of ammunition is used to produce illumination?

1. Propellant
2. Incendiary
3. Pyrotechnics
4. Illumination

8-2. What type of ammunition is characterized by a large high-explosive charge-to-weight ratio?

1. Cartridge-actuated device
2. Incendiary
3. Bomb-type ammunition
4. Inert ordnance

8-3. Which of the following devices is an explosive-loaded device designed to provide the means of releasing potential energy to initiate a function or a special-purpose action?

1. Cartridge-actuated device
2. Incendiary
3. Bomb-type ammunition
4. Inert ordnance

8-4. What actual size ammunition items with working mechanisms are used for training exercises but have no explosive materials?

1. Cartridge-actuated device
2. Incendiary
3. Bomb-type ammunition
4. Inert ordnance

8-5. What type of ammunition uses a chemical primarily for igniting combustible substances?

1. Cartridge-actuated device
2. Incendiary
3. Bomb-type ammunition
4. Inert ordnance

8-6. Ammunition intended for combat rather than for training has what classification?

1. Airborne stores
2. Propellants
3. Incendiaries
4. Service ammunition

8-7. The *Warhead* is the part of the ammunition containing the materials intended to inflict damage. What are the explosives in the warhead called?

1. Stores
2. Payload
3. Expendables
4. Components

8-8. An explosive is a material that is capable of producing an explosion by its own energy.

1. True
2. False

8-9. What are the two general classes of military explosives?

1. Explosive and nonexplosive
2. High and low explosives
3. Incendiary and burster explosives
4. Chemical and detonating explosives

8-10. Which of the following additives may be added to high explosives to provide desired stability and performance characteristics?

1. Powdered metals
2. Oils
3. Waxes
4. All the above

8-11. Which of the following explosives is characterized by the extremely fast decomposition called "detonation"?

1. High explosive
2. Low explosive
3. Initiating explosive
4. Auxiliary explosive

8-12. The decomposition of low explosives is known as what type of decomposition?

1. Detonation
2. Explosion
3. Deflagration
4. Combustion

8-13. Proper identification of ammunition provides which of the following types of information?

1. Service (live) ammunition
2. Nonservice (training) ammunition
3. Class of explosives
4. Each of the above

8-14. What is the most important means of identifying explosive hazards contained within ordnance?

1. Safety information sheets
2. Color codes
3. Manufacturer’s assembly card
4. Ordnance manual

IN ANSWERING QUESTIONS 8-15 THROUGH 8-18, REFER TO TABLE 8-1 IN YOUR TRAINING MANUAL.

8-15. Which of the following color codes identifies high explosives and indicates the presence of explosives either sufficient to cause the ammunition to function as a high explosive or particularly hazardous to the user?

1. Yellow
2. Brown
3. Red
4. Silver

8-16. Which of the following color codes identifies armor-defeating ammunition except on underwater ordnance?

1. Yellow
2. Brown
3. Red
4. Black

8-17. Which of the following color codes identifies incendiary ammunition or indicates the presence of highly flammable material?

1. Light blue
2. Light red
3. Light green
4. Light orange

8-18. Which of the following color codes identifies ammunition used for training or firing practice?

1. Light green
2. White
3. Light blue
4. Gray

8-19. Some bomb-type ammunition is shipped and stowed without the fuzes or arming assemblies and associated components installed for which of the following reasons?

1. Physical size of the weapon
2. To meet safety requirements
3. To simplify handling requirements
4. To provide required training

8-20. Approximately what percent of a Mk 80 general-purpose bomb's total weight is made of explosives?

1. 25%
2. 35%
3. 45%
4. 55%

8-21. By what means is the spacing of the suspension lugs used with general-purpose bombs determined?

1. The configuration of the aircraft's bomb rack
2. The size of the bomb
3. The assembly supervisor
4. The weapons handling officer

8-22. Bomb fuzes are divided into what two categories?

1. Explosion and detonation
2. Deflagration and combustion
3. Mechanical and electrical
4. Initiating and auxiliary

8-23. What part of the bomb causes a general-purpose bomb to fall in a smooth, stable, and definite curve to the target?

1. Stabilizer
2. Target detector
3. Fin assembly
4. Bomb casing

8-24. What is the preferred mode of delivery for low-level bombing to prevent damage to the aircraft?

1. Retarded
2. Unretarded
3. Mechanical
4. Restricted

8-25. What is the primary purpose of practice bombs?

1. To simulate different ballistic properties as those of service-type bombs
2. To provide optimum safety during the training of new or inexperienced pilots and ground handling crews
3. To provide low cost training and to provide an increase in available target locations
4. To provide for the training of experienced pilots and ground handling crews

8-26. A Mk 80 series bomb with a blue band around the nose is classified as what type of bomb?

1. Full-scale practice
2. Subcaliber practice
3. Service
4. Nonrestricted use

8-27. Which of the following types of bombs is/are classified as subcaliber practice bombs?

1. Mk 82 Mod 3
2. BDU-48/B
3. Mk 76 Mod 5
4. Both 2 and 3 above

8-28. What type of weapons carry and dispense small bomblets over a target area?

1. Laser guided bombs
2. General purpose bombs
3. Cluster bomb units
4. Full-scale bombs

8-29. The CBU-59/B contains bomblets of (a) what quantity and (b) what type?

1. (a) 717 (b) BLU-77/B
2. (a) 717 (b) Mk 118
3. (a) 247 (b) BLU-77/B
4. (a) 247 (b) Mk 110

8-30. Laser-guided bombs are modified from what types of general-purpose bombs?

1. Mk 82
2. Mk 83
3. Mk 84
4. All of the above

8-31. Where is the computer-control group mounted on a converted low-drag general-purpose bomb?

1. Conical fin assembly
2. Nose of the bomb body
3. Inside the bomb casing
4. Exterior mounting stanchion

8-32. How many assemblies make up the Mk 65 Quickstrike mine?

1. One
2. Two
3. Three
4. Four

8-33. Which of the following components enables a rocket to spin when fired from a slow-flying aircraft?

1. Nozzle
2. Folding fins
3. Scarfed nozzle insert
4. Stabilizer rod

8-34. What is the rocket launcher capacity for the Mighty Mouse weapons system?

1. 7 or 19 rockets
2. 4 or 12 rockets
3. 6 or 18 rockets
4. 5 or 16 rockets

8-35. Guided missiles are classified according to what characteristics?

1. Speed, launch environment, mission, vehicle type, and weight
2. Speed, launch environment, mission, range, and vehicle type
3. Speed, launch environment, mission, range, and weight
4. Speed, mission, range, vehicle type, and weight

8-36. At what speed is an object traveling in air at 766 miles per hour (Mach 1) under standard atmospheric conditions?

1. Subsonic
2. Transonic
3. Supersonic
4. Hypersonic

8-37. When a guided missile with a speed of Mach 2.5 is launched from an aircraft traveling at a speed of Mach 2.0, the missile will reach what speed?

1. Mach 0.5
2. Mach 2.5
3. Mach 4.5
4. Mach 5.5

IN ANSWERING QUESTIONS 8-38 AND 8-39, REFER TO TABLE 8-2 IN YOUR TEXT.

8-38. In the first letter designation for launching guided missiles and rockets, what letter signifies multiple launch environments?

1. A
2. B
3. C
4. D

8-39. In the second letter designation for the mission of guided missiles and rockets, what does the letter E signify?

1. Surface attack
2. Intercept aerial
3. Decoy
4. Special electronic

8-40. In the basic missile designation of the AGM-65E, what does the number signify?

1. Missile design
2. Mach speed
3. Modification
4. Model

8-41. What are the three significant color codes used on guided missiles?

1. White, brown, and blue
2. White, brown, and yellow
3. Red, brown, and blue
4. Yellow, brown, and blue

8-42. What is the tactical mission of the AIM-7F Sparrow III guided missile?

1. To destroy enemy ships
2. To destroy enemy ground radar installations
3. To intercept and destroy enemy aircraft
4. To destroy enemy fortified installations

8-43. The AGM-84A-1 Harpoon guided missile is an all-weather, air-launch, antiship attack weapon and is launched from which of the following aircraft?

1. F-15 and F-16
2. F-14 and AV-8
3. F/A-18 and EA-6
4. S-3 and P-3

8-44. The AIM-9L Sidewinder guided missile is comprised of what total number of major sections?

1. Five
2. Two
3. Three
4. Four

8-45. What maximum number of Phoenix missiles may be launched from a single aircraft with simultaneous guidance against widely separated targets?

1. Eight
2. Two
3. Six
4. Four

8-46. The AGM-65E Maverick guided missile uses what type of guidance?

1. Infrared
2. Laser
3. Homing
4. Heat-seeking

8-47. The AGM-65E/F guided missile is employed against what type of targets?

1. Microwave electromagnetic energy
2. Armored vehicles and fortified bunkers
3. Fortified ground installations, armored vehicles, and surface combatants
4. Ground personnel, bunkers, tanks, and artillery positions

8-48. What short-to-medium range guided missile is designed to be launched from helicopters at low air speeds and altitudes?

1. AGM-119B Penguin
2. AGM-88A HARM
3. AGM-65E/F Maverick
4. AGM-78E Standard

8-49. The AIM-120 AMRAAM is an advanced missile system and offers performance improvements over which of the following missiles?

1. Shrike
2. Sidewinder
3. Maverick
4. Sparrow

8-50. The Walleye guided weapon employs which, if any, of the following propulsion systems?

1. Double-base solid propellant
2. Liquid rocket motor
3. Single-base gas propellant
4. None of the above

8-51. What are the primary weapons used in antisubmarine warfare (ASW)?

1. Aircraft laid mines
2. Mk 54 depth bombs
3. Mk 46 torpedoes
4. Subsurface guided missiles

8-52. Where are naval mines used?

1. In enemy harbors and ports
2. In offensive mining operations only
3. In defensive mining operations only
4. In offensive and defensive mining operations

8-53. How is the M61A1 20-mm automatic aircraft gun (a) driven and (b) controlled?

1. (a) Gas blowback (b) Fire
2. (a) Hydraulically (b) Electrically
3. (a) Pneumatically (b) Manually
4. (a) Gas blowback (b) Hydraulically

8-54. What is the firing rate of the M61A1 20-mm gun as installed in Navy aircraft?

1. 4,000 (gun low) and 6,000 (gun high) rounds per minute
2. 2,000 (gun low) and 4,000 (gun high) rounds per minute
3. 5,000 rounds per minute
4. 7,200 rounds per minute

8-55. By what means is the night end of the Mk 124 Mod 0 marine smoke and illumination signal identified?

1. By color
2. By the raised beads on the casing
3. By the D-ring located on the ignition lanyard
4. By the larger sized end ring

8-56. What number of signal flares is contained in the Mk 79 Mod 0 illumination signal kit?

1. 4
2. 5
3. 6
4. 7

8-57. By which of the following methods can the LUU-2 aircraft parachute flare be launched?

1. By hand
2. From a bomb rack
3. Dispenser-launched
4. Each of the above

8-58. What is the primary purpose of the Mk 25 marine location marker?

1. As a distress signal for downed aircrew personnel
2. Antisubmarine warfare operations
3. To illuminate target areas
4. As a channel marker

8-59. The Mk 58 Mod 1 marine location marker produces yellow flame and white smoke for (a) a minimum of and (b) a maximum of how many minutes?

1. (a) 15 (b) 30
2. (a) 30 (b) 45
3. (a) 40 (b) 60
4. (a) 45 (b) 80

8-60. Which of the following functions is performed by cartridges and CADs in personnel escape devices?

1. Removal of cockpit canopies
2. Ejection of seats
3. Streaming of ejection seat drogue chutes
4. Each of the above

8-61. Which of the following ratings is normally responsible for the installation of cartridges and CADs as used in personnel escape systems?

1. AO
2. AME
3. AT
4. AD

8-62. What is the primary use of the CCU-45/B impulse cartridge?

1. To remove cockpit canopies
2. To eject seats
3. To release and eject stores from an aircraft in flight
4. To eject and deploy seat drogue chutes

8-63. Which of the following impulse cartridges is/are classified as miscellaneous cartridges?

1. Mk 19 Mod 0
2. Mk 97 Mod 0
3. Mk 1 Mod 3
4. Both 2 and 3 above

8-64. Aircraft weapons suspension and releasing equipment is generally operated by what means?

1. Hydraulic and pneumatic
2. Electronic and manual
3. Hydraulic and electrical
4. Hydraulic and mechanical

8-65. What is the function of bomb racks?

1. To carry stores
2. To arm stores
3. To release stores
4. Each of the above

8-66. How do bomb ejector racks differ from bomb racks?

1. Bomb ejector racks are designed to carry more weight
2. Bomb ejector racks are designed to carry less weight
3. Bomb ejector racks use electrically fired impulse cartridges
4. Bomb racks use electrically fired impulse cartridges

8-67. The BRU-11A/B bomb ejector rack provides (a) how many suspension hooks and (b) are spaced how far apart?

1. (a) Four
   (b) two 14 inches apart and two 30 inches apart
2. (a) Two
   (b) 30 inches
3. (a) Two
   (b) 14 inches
4. (a) Four
   (b) two 14 inches apart and two 28 inches apart

8-68. The Mk 8 Mod 5 bomb shackle is used on which of the following types of aircraft?

1. Fighter
2. Attack
3. Helicopter
4. Patrol

8-69. The SUU-25F/A flare dispenser provides the capability for suspending and launching what total number of LUU-2B/B aircraft parachute flares?

1. Eight
2. Two
3. Six
4. Four

8-70. The AN/ALE-29A countermeasures chaff dispensing set is capable of cartridge ejecting which of the following load configurations?

1. Mk 46 or MJU-8/B decoy flares
2. RR-129 or RR-144 chaff
3. Both 1 and 2 above
4. Mk 50 decoy flares or RR-142 chaff

8-71. What is the primary purpose of decoy flares?

1. Used during evasive maneuvers against heat-seeking missiles
2. Causes a jamming effect against ground-controlled radar installations
3. Interrupts enemy aircraft radar tracking systems
4. Used for training purposes only

8-72. The LAU-7/A guided missile launcher provides a complete launching system for which of the following guided missiles?

1. Sidewinder
2. Harpoon
3. Sparrow III
4. Phoenix

8-73. The LAU-92/A guided missile launcher is capable of carrying, retaining, and ejection-launching which of the following missiles?

1. Harpoon
2. Sparrow III
3. Maverick
4. Shrike

8-74. Which of the following designations is a classification of rocket launchers?

1. 2.75-inch or 5.0-inch
2. Reusable
3. Nonreusable
4. Each of the above

8-75. How many shots does the LAU-10 series rocket launcher provide?

1. 4
2. 7
3. 19
4. 21

CHAPTER 9

SUPPORT EQUIPMENT

INTRODUCTION

This chapter identifies support equipment (SE) used to handle, service, load, test, and maintain aircraft. As an Airman Apprentice, you will be required to operate SE. Some SE is used both ashore and afloat, while other SE is used only ashore or only afloat. The SE division of the AIMD is tasked with maintaining SE. Principal users of SE are the squadron line division, the base operations line division, and the air department aboard aircraft carriers.

TYPES OF EQUIPMENT

LEARNING OBJECTIVE: Identify the purpose and function of the types of support equipment, to include operation, maintenance, hazards, and carrier air and shore-based operations.

There are two types of support equipment—aircraft handling equipment and aircraft servicing equipment. The following text discusses these various types of support equipment.

HANDLING EQUIPMENT

Aircraft handling equipment consists of tow tractors; crash and salvage equipment, to include fire-fighting vehicles and maintenance cranes; forklift trucks; and flight deck scrubbers.

Tow Tractors

Various tow tractors in the Navy inventory are discussed in the following text.

A/S32A-30 AIRCRAFT GROUND SUPPORT EQUIPMENT TOWING TRACTOR.—The A/S32A-30 tow tractor (fig. 9-1) is a 6-cylinder, gasoline-powered, four-wheel, heavy-duty vehicle with a three-speed transmission. The tractor frame is a welded steel one-piece unit. It is equipped with hydraulically actuated front disc brakes and drum-type brakes on the rear wheels. A hydraulically assisted steering unit provides steering to the front wheels. The tractor employs a 12-volt electrical system to supply power for lighting, starting, horn, and instrument operation. It comes equipped with two seats—one driver and one passenger—mirrors, front and rear towing couplers (pintles), tie-down fittings and lifting attachments. It can be fitted with a fully enclosed cab. It is designed to tow aircraft servicing equipment, work stands, and armament handling equipment.

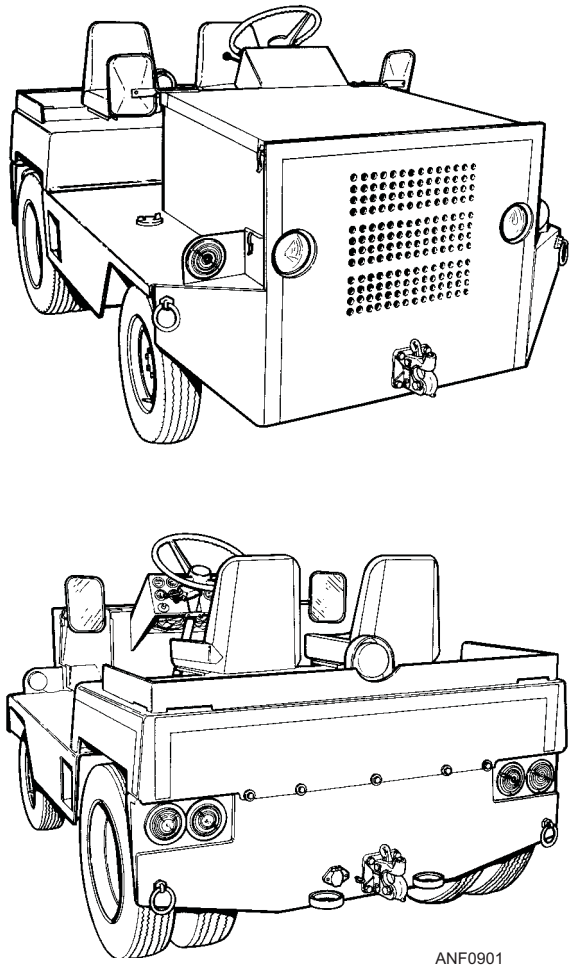

Figure 9-1.—A/S32A-30 aircraft ground support equipment towing tractor.

A/S32A-30A AIRCRAFT GROUND SUPPORT EQUIPMENT TOWING TRACTOR.—The A/S32A-30A tow tractor (fig. 9-2) is a 4-cylinder, diesel engine, (dual wheel) rear-wheel-drive tractor with a 40,000-pound towing capacity. It comes with a three-speed automatic transmission, hydraulic brakes on front and rear wheels, conventional power steering with power assist to the front wheels, and employs a conventional 12-volt electrical system with battery and alternator to supply power for the lights, horn, starter motor, ignition, and instruments.

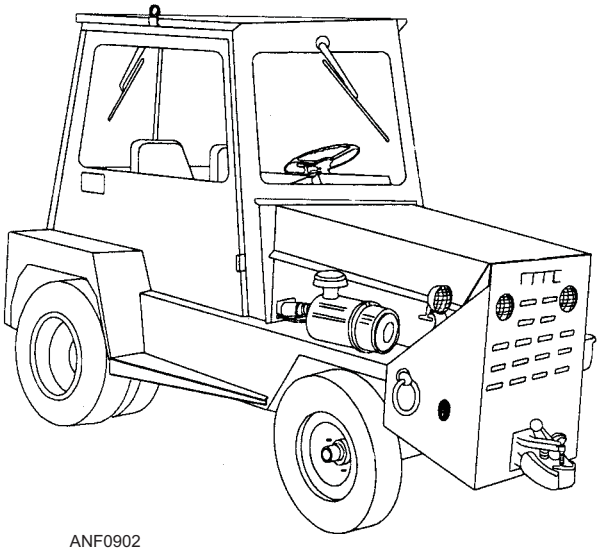

Figure 9-2.—A/S32A-30A aircraft ground support equipment towing tractor.

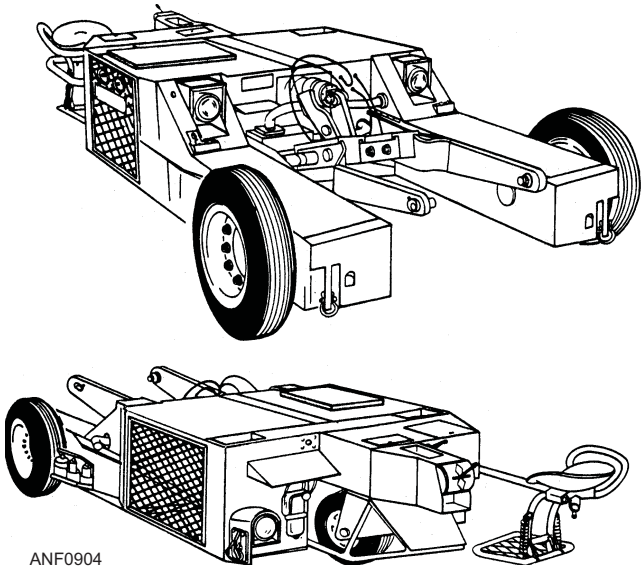

Figure 9-4.—A/S32A-32 aircraft towing tractor.

The tractor frame is a welded steel one-piece unit that is cross-braced to prevent misalignment. It also has front and rear towing couplers (pintles), tie-down and lifting attachments, and exterior lighting. The welded steel cab encloses the driver and one passenger seat, supports two flush-mounted doors with sliding glass windows, mirrors, front and rear windshield wipers, and dome light.

A/S32A-31A AIRCRAFT TOWING TRACTOR.—The A/S32A-31A aircraft towing tractor (fig. 9-3) is designed for towing aircraft aboard ship. The drive system consists of a three-cylinder diesel engine, automatic transmission, and rear wheel drive with dual wheels. Front wheel steering is power assisted and has seating for the driver only. Service brakes are hydraulic, power operated, wet disc type with a mechanical hand brake for the rear wheels. A 24-volt

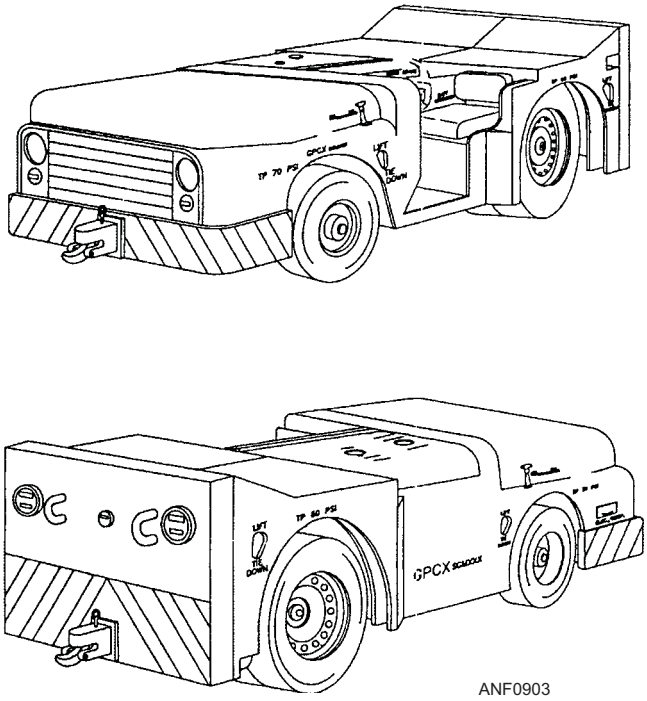

Figure 9-3.—A/S32A-31A aircraft towing tractor.

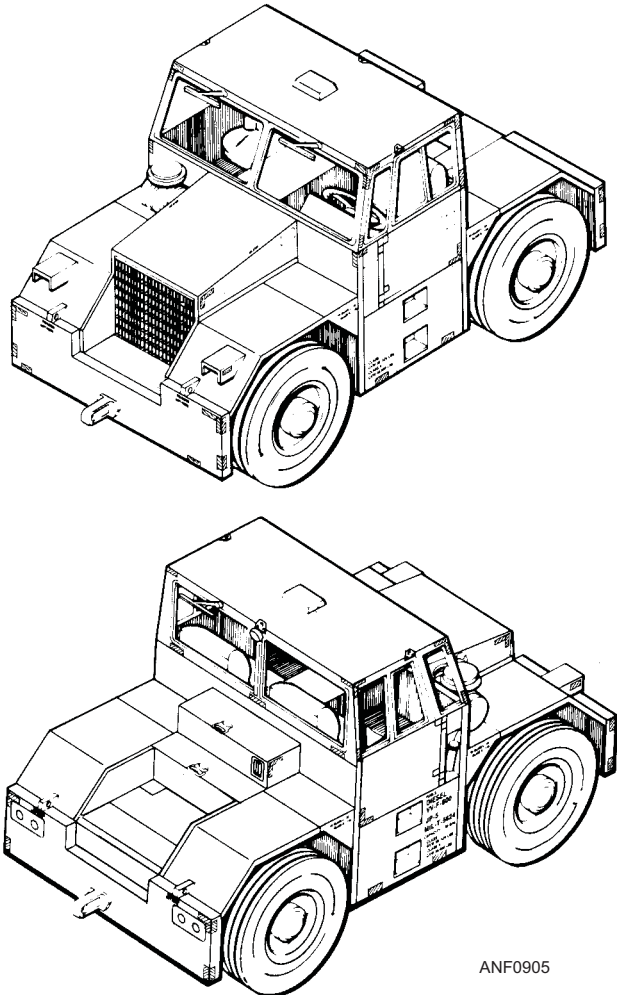

Figure 9-5.—A/S32A-37 aircraft towing tractor.

electrical system provides starting, lighting, and instrumentation. Front and rear mounted pintles are used for aircraft towing. A universal jet-engine start unit mounts to the rear of the tractor.

A/S32A-32 AIRCRAFT TOWING TRACTOR.—The A/S32A-32 Aircraft Towing Tractor (fig. 9-4), also called "The Spotting Dolly," is designed to tow, turn, and position aircraft within the confines of an aircraft carrier hangar deck. It is powered by a three-cylinder diesel engine, which drives two main hydraulic pumps. The hydraulic pumps supply fluid to drive motors that turn two open-chain reduction drives via two gearboxes at each main wheel, which operates independently. A mechanical wheel clutch handle is used to engage or disengage the drive wheels, enabling the tractor to pivot on a caster wheel around its center within a zero turning radius. A Joystick Control, next to the operator's seat, is an electromechanical device used to control the speed and direction of the spotting dolly's movement. The lift cylinder, which raises and lowers the lifting arms, and two spread cylinders, which keep the arms pinned against the aircraft nose gear, are powered by an auxiliary hydraulic pump. Several pairs of axle pins that engage both sides of the nosewheel are carried on the tractor and fit a variety of aircraft.

A/S32A-37 AIRCRAFT TOWING TRACTOR.—The A/S32A-37 aircraft towing tractor (fig. 9-5) is an inline, 6-cylinder, diesel-powered, liquid-cooled, 4-wheel drive vehicle used to move heavy, shore-based aircraft. The full power shift transmission has six forward and three reverse speeds. The tractor's front wheels are steered by two hydraulic cylinders, and all wheels are equipped with hydraulically powered disc brakes. A two-seat, heated, enclosed cab with removable doors is provided for operator comfort in all weather. Two 12-volt batteries, 24-volt alternator, electrical system provides power for lighting, instrumentation, control panels, starter motor, transmission control, switches, wiper/washer motor, and heater/defroster. The tractor is capable of 35,000 pounds of drawbar pull with the traction ballast kit installed.

A/S32A-42 AIRCRAFT MID-RANGE TOW VEHICLE.—The A/S32A-42 aircraft mid-range tow vehicle (fig. 9-6) is a 4-cylinder, diesel-powered,

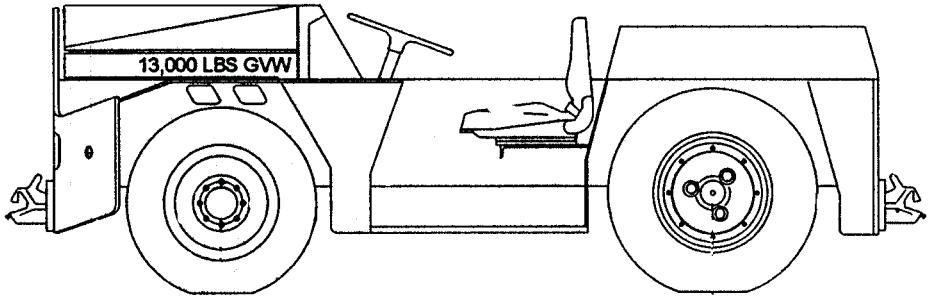

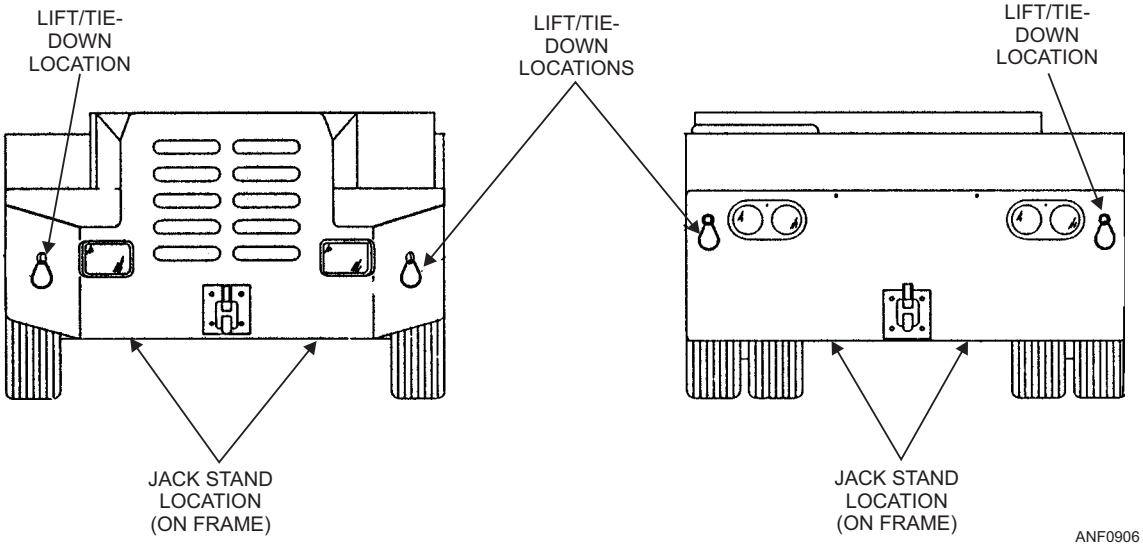

Figure 9-6.—A/S32A-42 aircraft mid-range tow vehicle.

3-speed automatic transmission, liquid cooled, rear-wheel-drive tractor designed for towing aircraft weighing up to 100,000 pounds. The frame is a welded-steel one-piece unit, with cross brace, power assisted front wheel steering, hydraulic boost power disc brakes, and a conventional 12-volt electrical system, with alternator, to supply power for the lights and accessories, horn, starter motor, ignition, and instruments. Front and rear tow couplers (pintles) and tie-down attachments are provided.

Crash and Salvage Equipment

Various salvage and maintenance cranes, fire-fighting vehicles, and Twinned Agent Unit (TAU-2H) extinguishers are discussed in the following text.

A/S32A-35A (CVCC) AIRCRAFT CRASH HANDLING AND SALVAGE CRANE.—The A/S32A-35A aircraft crash handling and salvage crane (fig. 9-7) is a self-propelled, four-wheel drive, six-cylinder, liquid-cooled, turbocharged, diesel electric-powered vehicle mounted on six pneumatic rubber tires. The ac generator is directly coupled to the engine and provides power to the drive motors, luff/hoist winch motor, auxiliary hoist/counterweight wench motor and motor control systems. A hydraulic pump is directly coupled to the engine and provides fluid flow for steering, self-adjusting service brakes, and winch brake control. Vehicle steering is accomplished by hydraulic cylinders, which connect to the rear axle and main frame. The front and rear axles pivot in opposite directions, allowing significant turning capability. The crane main hoist has a static lift capacity of 75,000 pounds and the crane auxiliary hoist has a lift capacity of 10,000 pounds.

The crane is capable of operating aboard ship in inclement weather. It is designed to be stowed on the flight deck of an aircraft carrier, where it will be exposed to extreme weather and corrosive conditions. In service, the crane will lift crashed/damaged aircraft from various locations and attitudes and move loads on a rolling and pitching ship to a safe parking zone on the flight deck.

A/S32A–36A (AACC) AIRCRAFT CRASH HANDLING AND SALVAGE CRANE.—The A/S32A-36A aircraft crash handling and salvage crane (fig. 9-8) is a six-wheel, four-wheel drive, liquid-cooled, turbocharged, diesel, electric-powered, self-propelled vehicle. Steering is hydraulically controlled via the front and rear wheels. Mid and rear axle drive motors provide traction power and has a

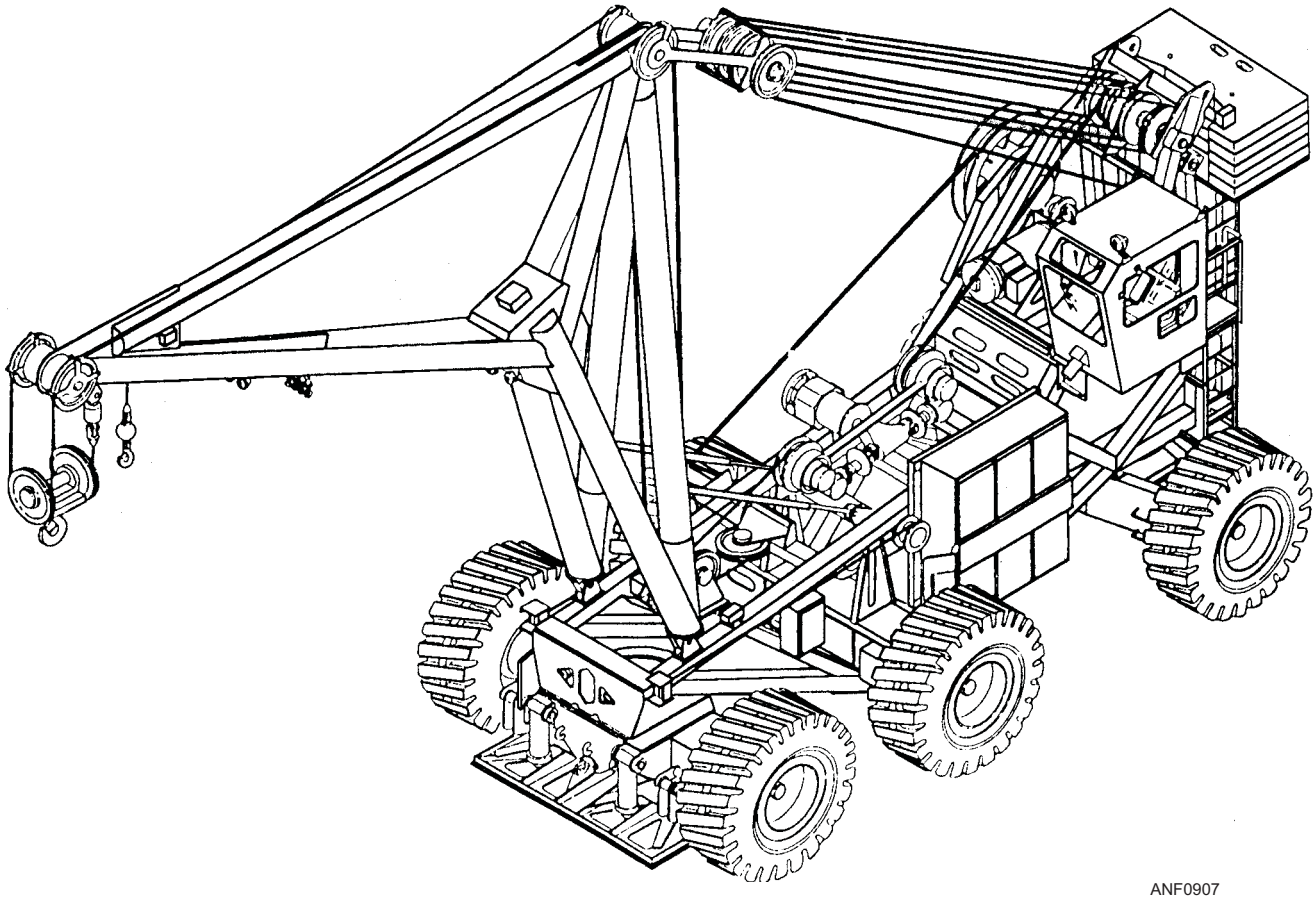

Figure 9-7.—A/S32A-35A (CVCC) aircraft crash handling and salvage crane.

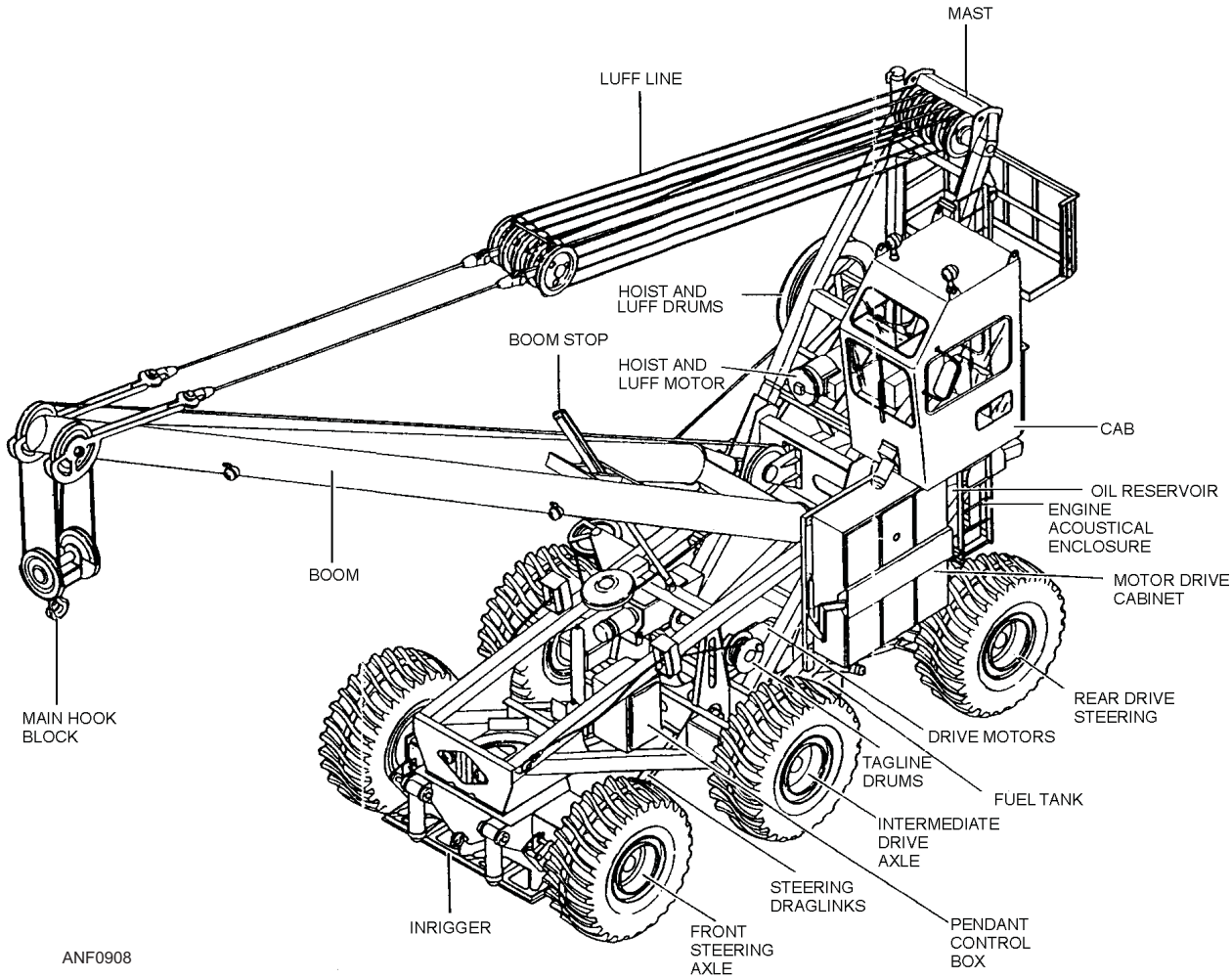

Figure 9-8.—A/S32A-36A (AACC) amphibious assault ship crane.

six-wheel, self-adjusting air/hydraulic brake system incorporated. Rear and mid dc electric drive motors provide power for crane travel, while a separate dc electric motor provides power to the main hoist control or boom luff control. The crane has a maximum lift capability of 70,000 pounds and can be operated from the cab or by a remote pendant control.

The crane is capable of operating aboard ship in inclement weather. It is designed to be stowed on the flight deck of an aircraft amphibious assault ship, where it will be exposed to extreme open-sea weather conditions and the corrosive effects of a saltwater atmosphere. In service, the crane will lift crashed/damaged aircraft from various locations and attitudes and move loads on a rolling and pitching ship to a safe parking zone on the flight deck.

A/S32P-25 SHIPBOARD FIRE-FIGHTING VEHICLE.—The P-25 shipboard fire-fighting vehicle (figs. 9-9 and 9-10) is a four-wheel (two-wheel drive), six-cylinder, turbocharged, liquid-cooled, 24-volt, diesel-powered vehicle with a hydrostatic drive system that transmits power to the rear wheels. Steering is preformed by a single hydraulic cylinder and tie-rod assembly that controls the front wheels. Dynamic vehicle braking is provided by the hydrostatic drive system. When the accelerator is released, the brakes automatically engage. Separate tanks within the vehicle chassis carry 750 gallons of water and 55 gallons of AFFF (Aqueous Film-Forming Foam). Three 20-pound fire extinguishers containing Halon 1211 (halogenated extinguishing agent) are stored on the right side of the vehicle. One nursing line connection on each side of the vehicle provides AFFF mixture from the ship's system directly to the vehicle's water pump.

The vehicle has seating for a crew of two. The driver compartment is located at the left forward end of the vehicle and contains the main control panel for activating the fire-fighting systems. AFFF can be sprayed from both the forward turret nozzle and handline hose reel nozzle. These nozzles operate independently and can be used simultaneously to make this vehicle ready for fire-fighting duty.

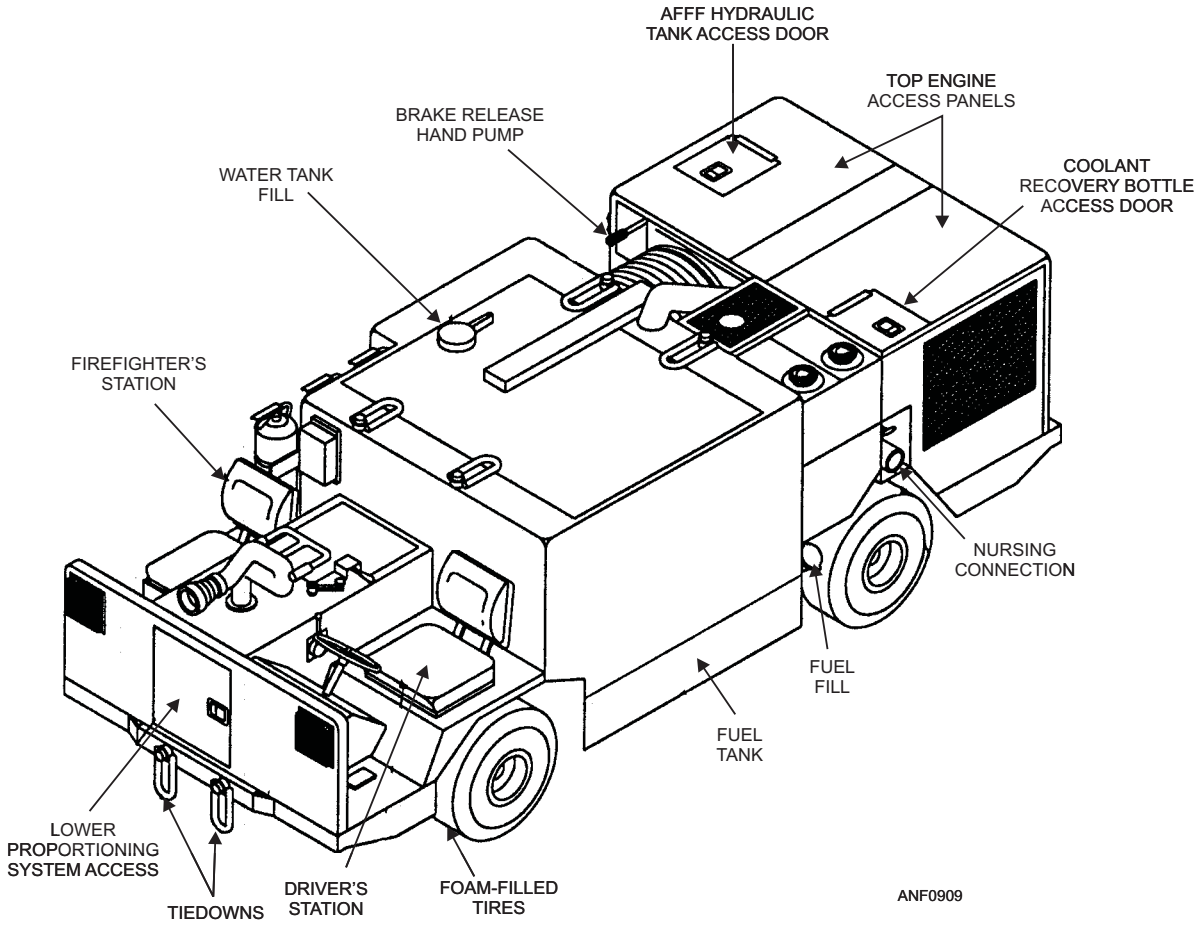

Figure 9-9.—A/S32P-25 shipboard fire-fighting and rescue vehicle—major assemblies and components (left side).

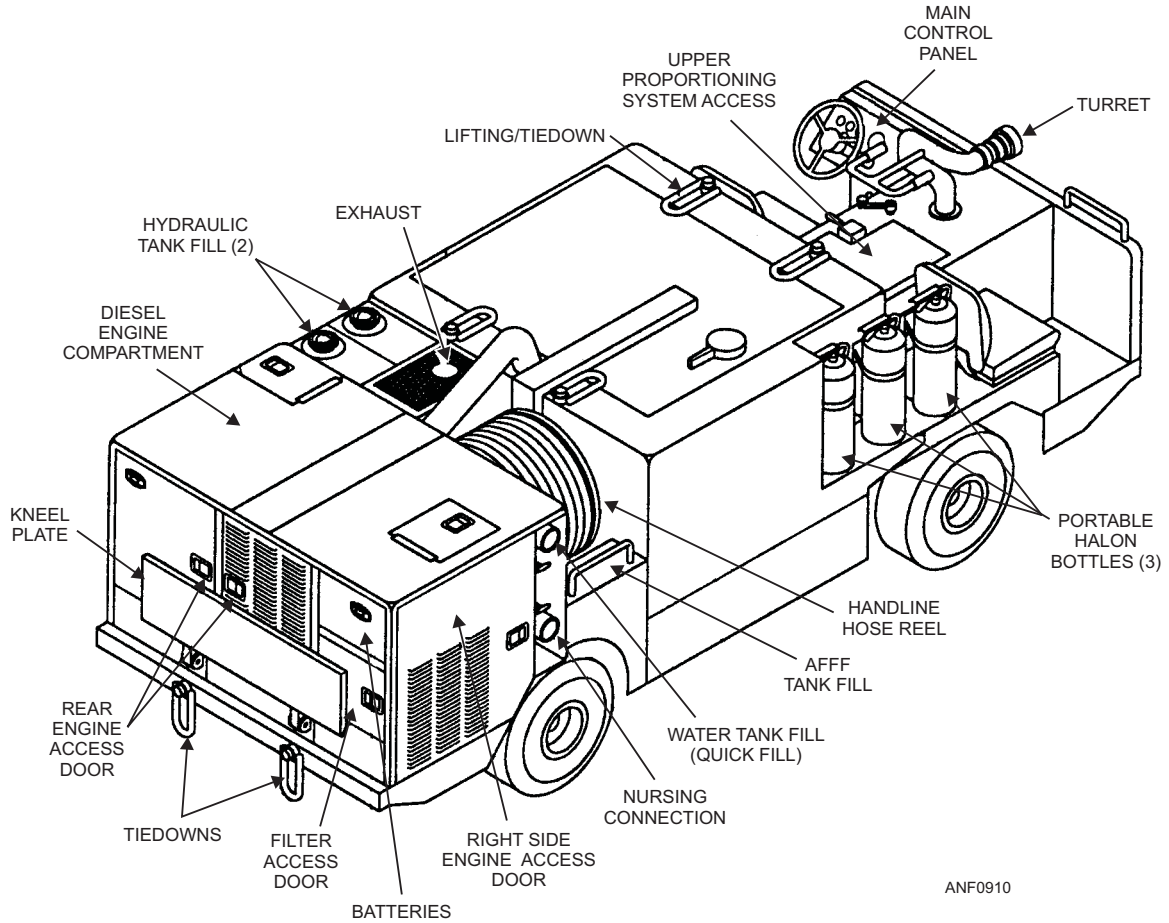

Figure 9-10.—A/S32P-25 shipboard fire-fighting and rescue vehicle—major assemblies and components (right side).

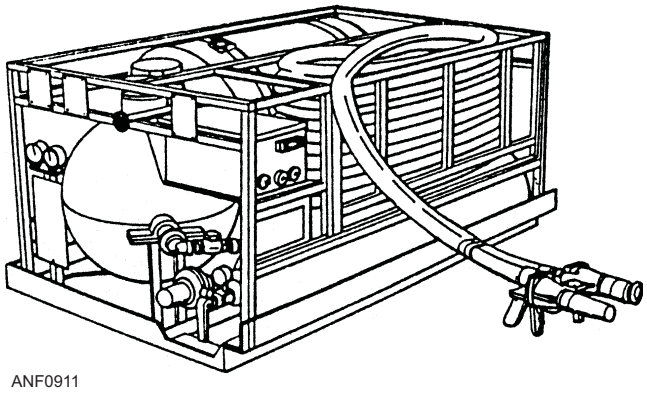

Figure 9-11.—TAU-2H twinned agent unit.

TWINNED AGENT UNIT (TAU-2H).—The Twinned Agent Unit (TAU-2H) extinguisher (fig. 9-11) is a dual-agent apparatus that is designed primarily for extinguishing class B fires and is employed aboard ship and shore facilities normally located at hot refueling sites, or it can be vehicle-mounted. The TAU-2H is a self-contained unit with a framework with two agent tanks—one containing 86 gallons of AFFF premixed solution and the other containing 200 pounds of Halon 1211. The system permits use of the fire-fighting agents either separately or simultaneously. The TAU-2H employs a noncollapsible dual hose line encased in a fire-resistant cotton jacket. The twinned hose line is normally stowed in a rack or mounted on a reel. The fire-extinguishing agents are propelled by nitrogen, which is supplied by one 2700 psi pressurized cylinder that is regulated to 200 psi and mounted on the framework. The twinned nozzles on the handline expel the fire-fighting agents. The Halon nozzle is equipped with a low-reaction discharge tip. The AFFF nozzle is equipped with an aspirating tip. Duel pistol grip handles and triggers operate the shutoff valves. Extinguishment is obtained by applying agents in a sweeping motion, using the chemical agent Halon 1211 to gain initial extinguishment, followed by application of AFFF to blanket the combustible liquid and preclude reignition.

A/S32M-14, 8 1/2 TON AIRCRAFT MAINTENANCE CRANE.—The A/S32M-14, 8 1/2 ton aircraft maintenance crane (fig. 9-12) is a four-wheel

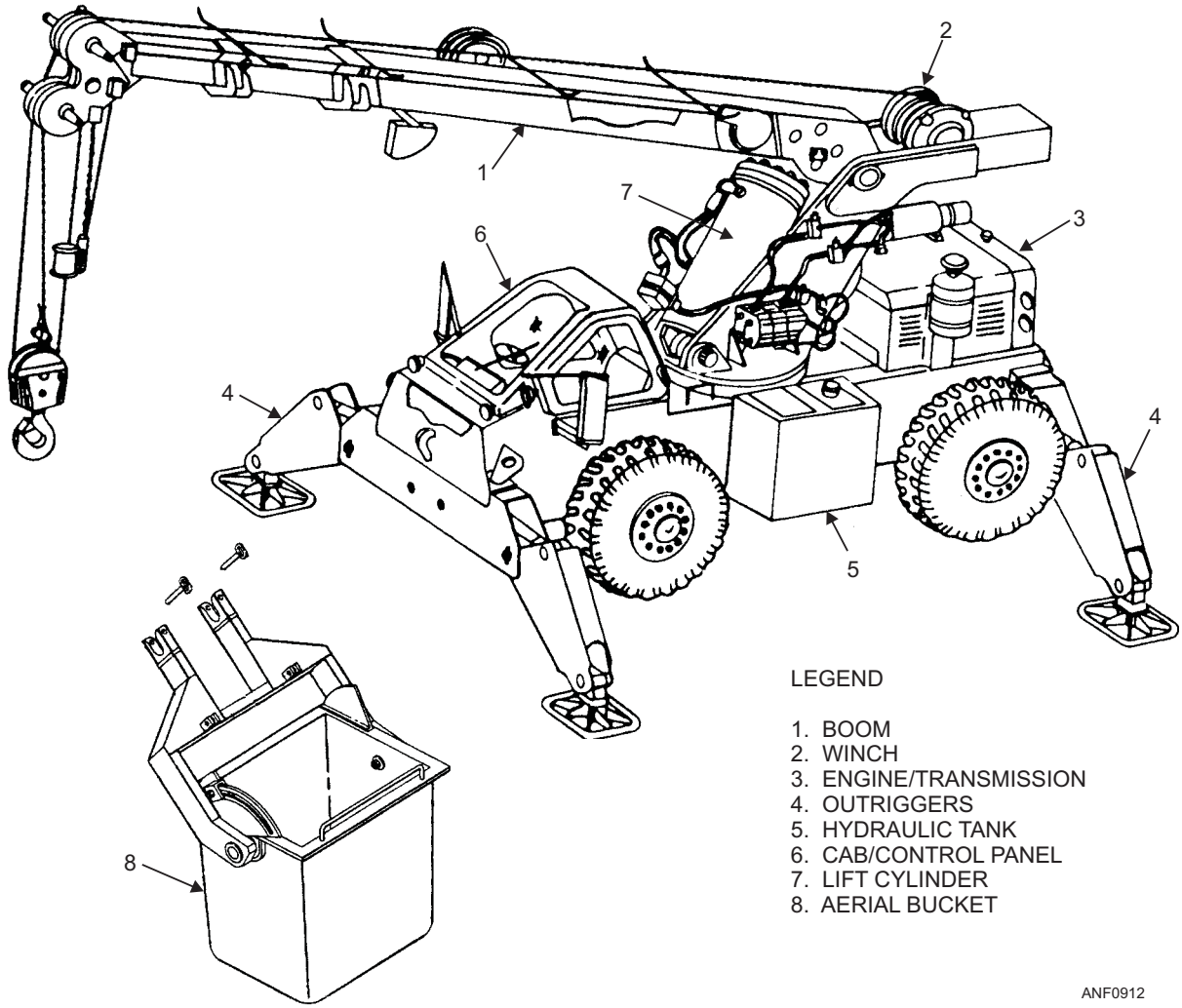

Figure 9-12.—A/S32M-14, 8 1/2 ton aircraft maintenance crane.

drive, four-wheel steering, four-cylinder, diesel powered vehicle with a main transmission, drive axles, and a hydraulic craning circuit. The hydraulic craning circuit consists of a hydraulic pump and motors, valves, cylinders, piping, and a superstructure that revolves 360 degrees and can lift and move loads from one location to another. A 24-volt electrical circuit provides power for starting, lighting, instrumentation, and electrohydraulics. The crane's primary purpose is to remove and replace aircraft components in support of scheduled and unscheduled maintenance. This includes engines, transmissions, propellers, engine modules, and rotor blades.

Forklift Truck

The forklift truck (fig. 9-13) is a cantilever-type industrial truck, either gasoline, diesel (shipboard use), or electrically operated, and is used in the handling and lifting of palletized unit loads. It contains vertical uprights and an elevator backplate equipped with two or more forks of sufficient length and thickness for lifting pallets. The forklift truck is probably the most widely used power-driven piece of material-handling equipment for palletized loads aboard ship and in Navy industrial supply warehouses. When not on a hard surface, a forklift truck should have pneumatic tires to operate efficiently. Public works maintains forklifts on shore stations. Aboard carriers, the support equipment division of AIMD performs the maintenance.

Flight Deck Scrubber

The fight deck scrubber (fig. 9-14) is designed to spray a cleaning solution onto the flight and hangar decks, scrub the deck, and recover the residual solution and debris for disposal. It consists of the debris hopper housing, two opposed rotation cylindrical brushes, a solution and recovery tank, and a vacuum recovery system and rear squeegee. Those are mounted on a driver-operated, four-cylinder, two-wheel drive, diesel engine power drive train. The purpose of having flight deck scrubbers aboard ship is to achieve and maintain a high degree of deck cleanliness, which contributes to a reduction of aircraft engine Foreign Object Damage (FOD) and provides better traction, thereby improving personal safety during flight operations.

SERVICING EQUIPMENT

Servicing equipment provides compressed nitrogen or air, electrical and hydraulic power, and air-conditioning for aircraft functions while the aircraft is on the ground. Mobile electrical power plants (MEPPs) supply electrical power for aircraft testing and maintenance and operate on shore stations and aboard aircraft carriers. MEPPs have high

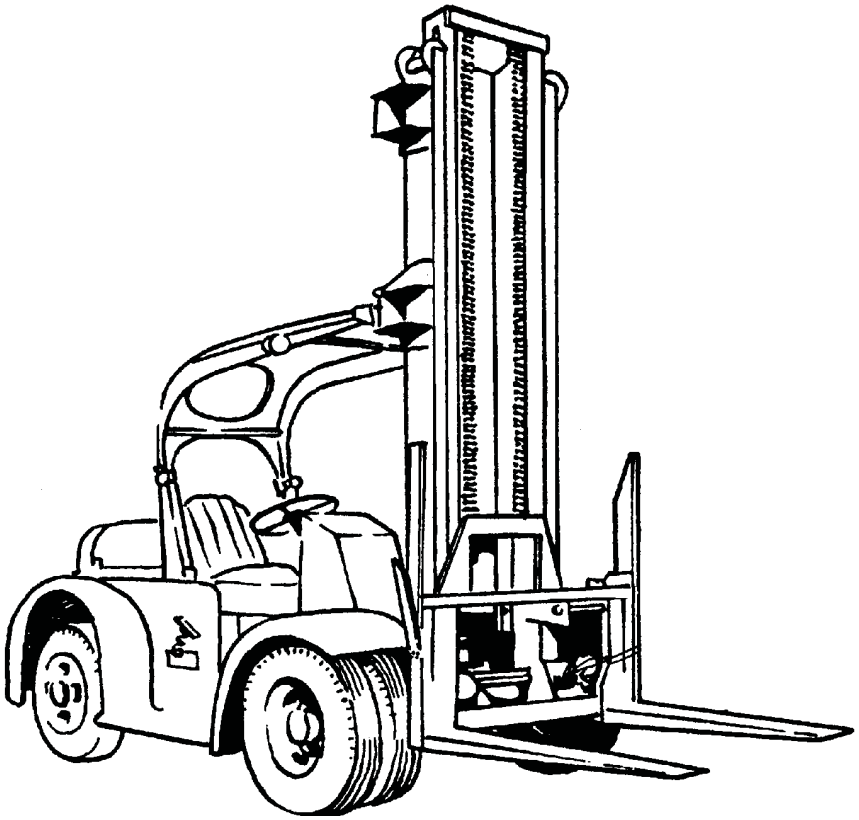

ANF0913

Figure 9-13.—Forklift truck.

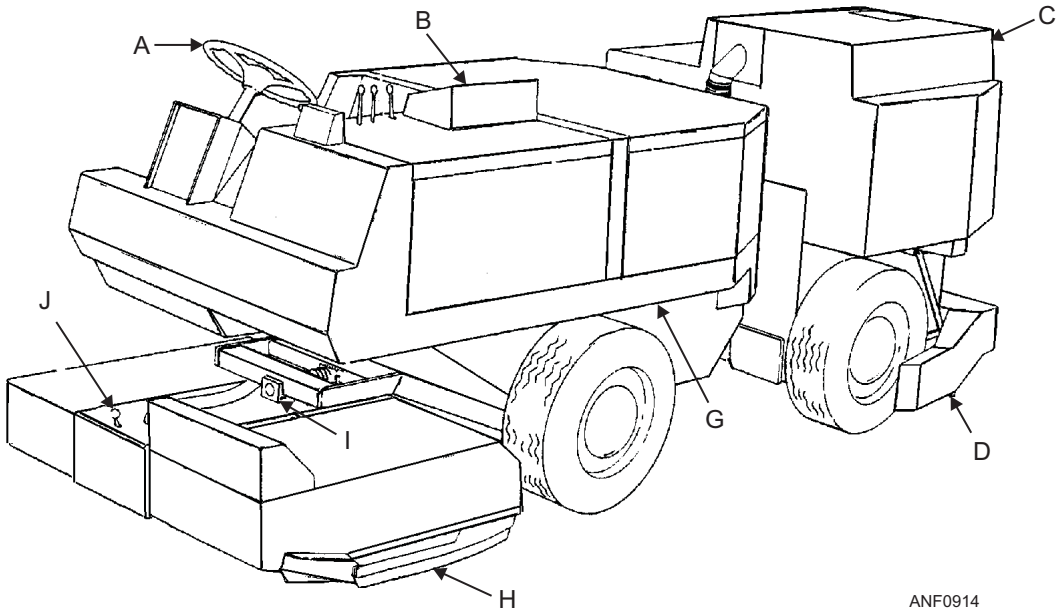

A. Steering wheel
B. Instrument panel
C. Solution tank
D. Rear squeegee
E. Recovery tank
F. Clean-out door
G. Articulated joint
H. Side squeegee
I. Head pivot
J. Debris trough release lever

Figure 9-14.—Model 550DN flight deck scrubber.

maneuverability and mobility. On shore stations, MEPPs may be self-propelled or trailer-mounted and require towing. The following text describes some of the servicing units you will see in the aviation community.

NC-2A Mobile Electric Power Plant (MEPP)

The NC-2A (fig. 9-15) is designed primarily for use aboard aircraft carriers. It is a four-wheel, self-propelled, three-cylinder diesel-engine-powered service unit. The three-cylinder engine drives the ac

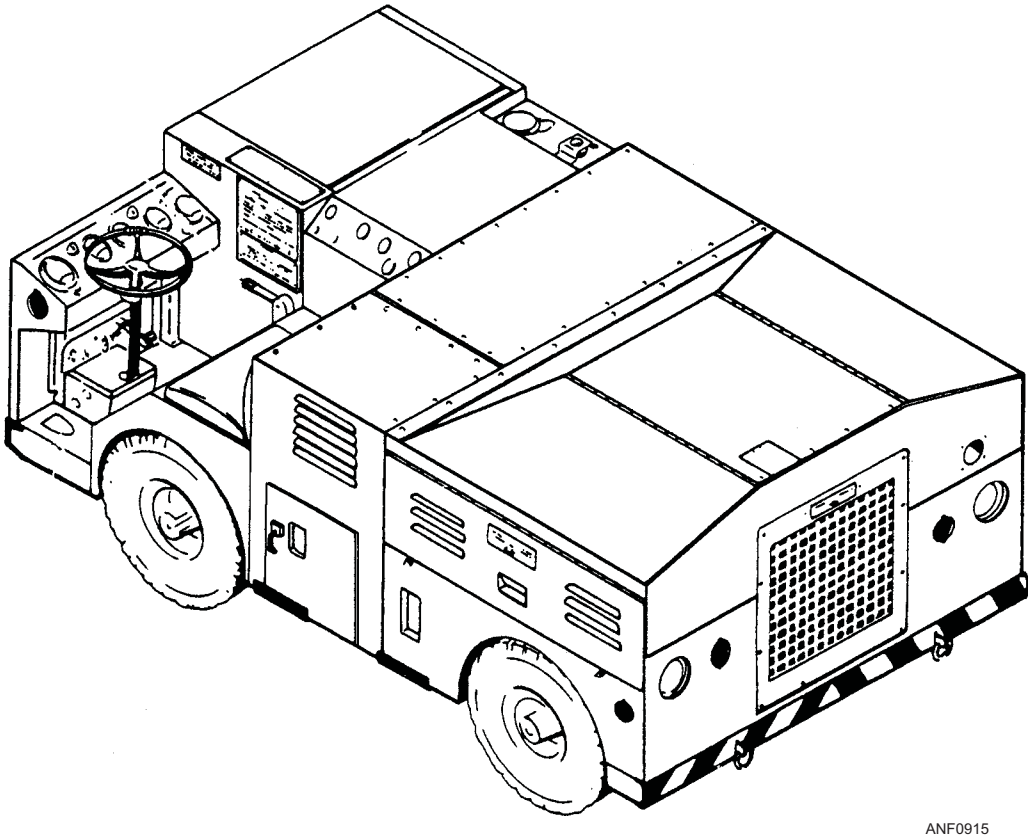

Figure 9-15.—NC-2A mobile electric power plant.

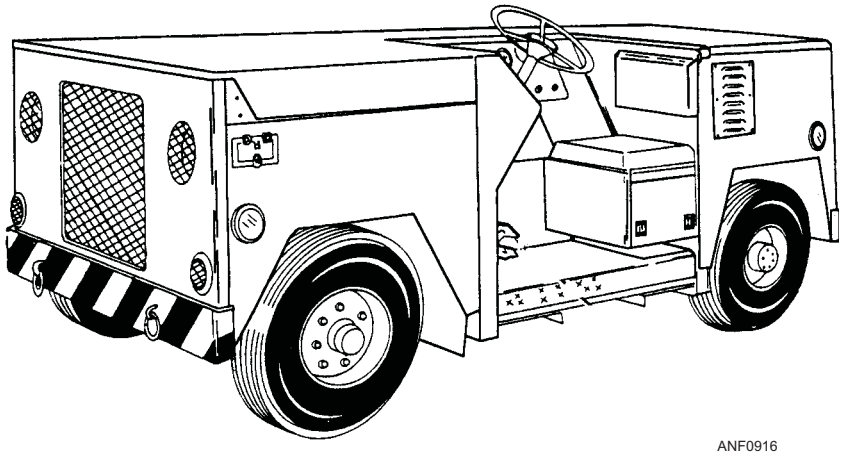

Figure 9-16.—NC-8A mobile electric power plant.

and dc generators through a speed increasing transmission. The front axle is driven by a 28-volt dc, reversible, variable speed motor and steered by the two rear wheels, and is easy to maneuver in congested areas. The ac and dc power cables are stored in a compartment near the driver. They deliver 115/200-volt, 3-phase, 400-hertz ac, and 28 volts of dc to the aircraft. All controls, both propulsion and electrical power, are located on three panels located in front and to the right of the operator's seat. The MEPP is designed for air transport and is provided with tie-down rings and forklift channels.

NC-8A Mobile Electric Power Plant (MEPP)

The NC-8A (fig. 9-16) is a four-wheel, electrically propelled, front-wheel steering, rear-wheel drive, four-cylinder, liquid-cooled, diesel-engine-powered service unit. It provides 115/200-volt, 3-phase, 400-hertz ac and 28 volts of dc electrical power for starting, servicing, and maintenance of rotary and fixed-wing aircraft. The ac and dc power cables are located and stored on spring-loaded reels in a compartment in the rear of the vehicle. All propulsion and electrical controls are located on two panels in the driver's compartment. This MEPP is used primarily on shore stations, but it can also be operated aboard ship.

NC-10C Mobile Electric Power Plant (MEPP)

The NC-10C (fig. 9-17) is a trailer-mounted, self-contained power plant designed for shore-based facilities. It supplies electrical power for servicing, starting, and maintaining aircraft. The six-cylinder,

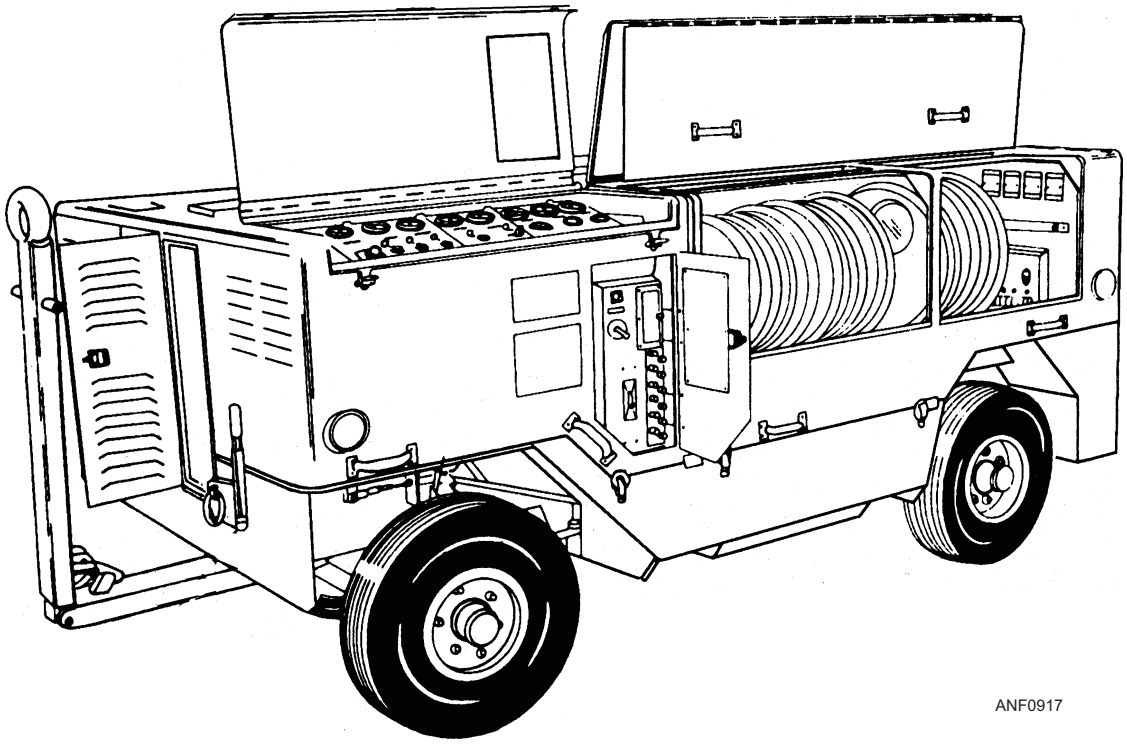

Figure 9-17.—NC-10C mobile electric power plant.

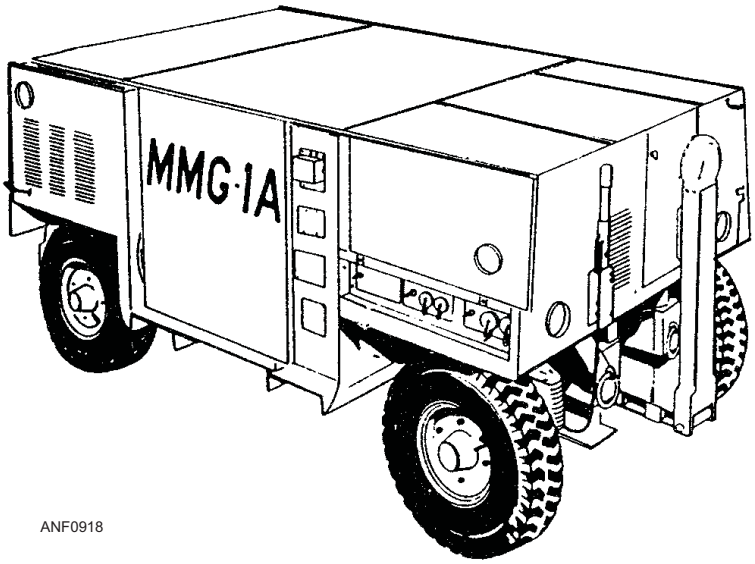

Figure 9-18.—MMG-1A mobile electric power plant.

two-cycle, water-cooled, diesel engine and components, ac and dc generators, are enclosed in a removable steel housing. The ac and dc power cables are stored on spring-loaded reels next to the control panel and deliver 115/200-volt, 3-phase, 400-hertz ac and 28-volt dc electrical power. A tow bar for towing and steering, tie-down rings, fire extinguisher, hinged doors for operation, and manual hand brake are provided.

MMG-1A Mobile Electric Power Plant (MEPP)

The MMG-1A (fig. 9-18) is a small, compact, trailer-mounted, electric motor-driven generator set. It provides 155/200-volt, 3-phase, 400-hertz ac power, and 28-volt dc power for aircraft maintenance, calibration, and support. Operation of the unit requires a 3-phase, 60-hertz, 220- or 440-volt external power source. The 30-foot input and output cables are stowed in compartments in the rear and left front side of the unit. It is used both aboard ship and ashore. The MEPP is not self-propelled and must be towed or manually moved. The 4-wheel trailer is equipped with tie-down rings, pneumatic tires, a mechanical hand brake, and a tow bar for towing and steering.

A/M47A-4 Jet Aircraft Start Unit

The A/M47A-4 jet aircraft start unit (fig. 9-19) is a 4-wheel, trailer-mounted, transportable gas turbine air

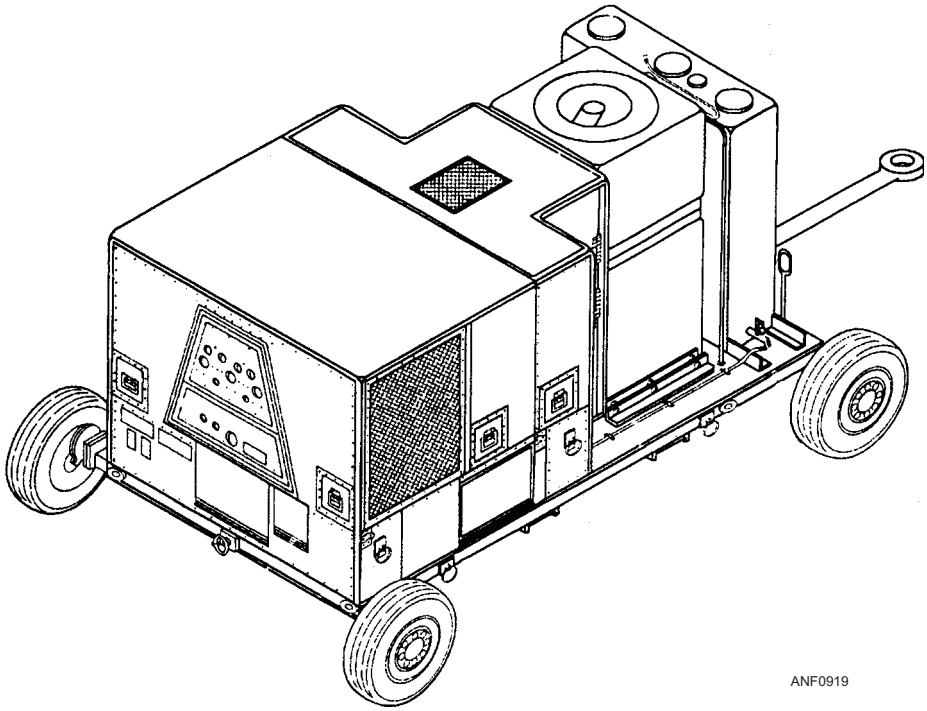

Figure 9-19.—A/M47A-4 trailer-mounted jet aircraft start unit.

compressor (GTC) used to provide air and electrical power for starting aircraft jet engines. The start unit contains all the components and fuel supply necessary for independent operation. The start unit requires manual start initiation/stop and manual air selection. Once started, an engine control system regulates start, acceleration, and engine operation. Air start hoses and electrical cables are provided. This unit is used aboard shore stations.

A/S47A-1 Jet Aircraft Start Unit

The A/S47A-1 jet aircraft start unit (fig. 9-20) is a tractor-mounted, self-contained, mobile aircraft turbine engine air start unit. The air start unit enclosure consists of a control panel, enclosure assembly, gas turbine air compressor (GTC), stowage rack for the air start hose, and turbine support and mounting assembly. Except for fuel and electrical power (supplied by the tractor), the enclosure contains all systems necessary for gas turbine engine operation. This unit is used aboard ship and on shore stations.

> **WARNING**
>
> Hot exhaust from a jet aircraft start unit is a serious hazard when operating in close proximity to aircraft, aircraft components, fuel, weapons, equipment, and personnel.

You must take extra special precautions as to where a gas turbine compressor (GTC) is positioned during operation, especially aboard ship where aircraft are parked closely together. High volume air pressure, extreme exhaust temperatures, jet intake suction, high noise levels, and unqualified operator's are all potential hazards.

A/M27T-5 Hydraulic Portable Power Supply

The A/M27T-5 hydraulic portable power supply (fig. 9-21) is a self-contained, single-system, hydraulic pumping unit powered by a three-cylinder, two-cycle, diesel engine with a rated capacity of 20 gpm at 3,000 psi and 10 gpm at 5,000 psi. During normal operation the diesel engine runs at speeds up to 2,500 rpm. The A/M27T-5 engine operates on JP-5 (jet fuel) or diesel fuel, and the hydraulic reservoir holds 20 gallons. Pressure and return hydraulic hoses, a tow bar, tie-down rings, and a manual hand brake are provided.

A/M27T-7 Hydraulic Portable Power Supply

The A/M27T-7 hydraulic portable power supply (fig. 9-22) is similar in operation to the A/M27T-5 except for its source of power. The A/M27T-7 is powered by a 50 horsepower electric motor. A 50-foot power cable is provided for connection to an external 440-volt, 3-phase, 60-hertz power source and can be set up to operate on a 220-volt source. The hydraulic reservoir holds 16 gallons and is equipped with a fluid level sight gauge. Pressure and return hydraulic hoses, a tow bar, tie-down rings, and a manual hand brake are provided.

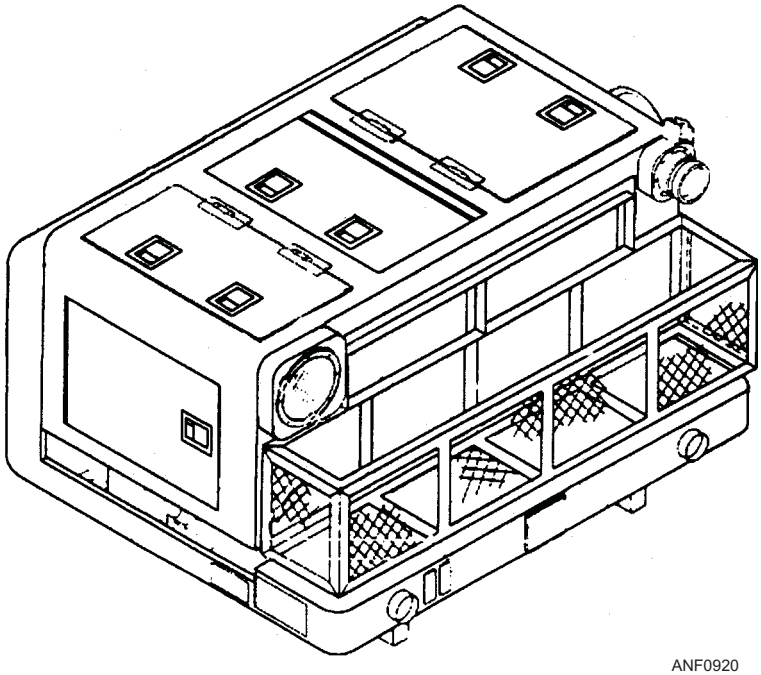

Figure 9-20.—A/S47A-1 tractor-mounted jet aircraft start unit.

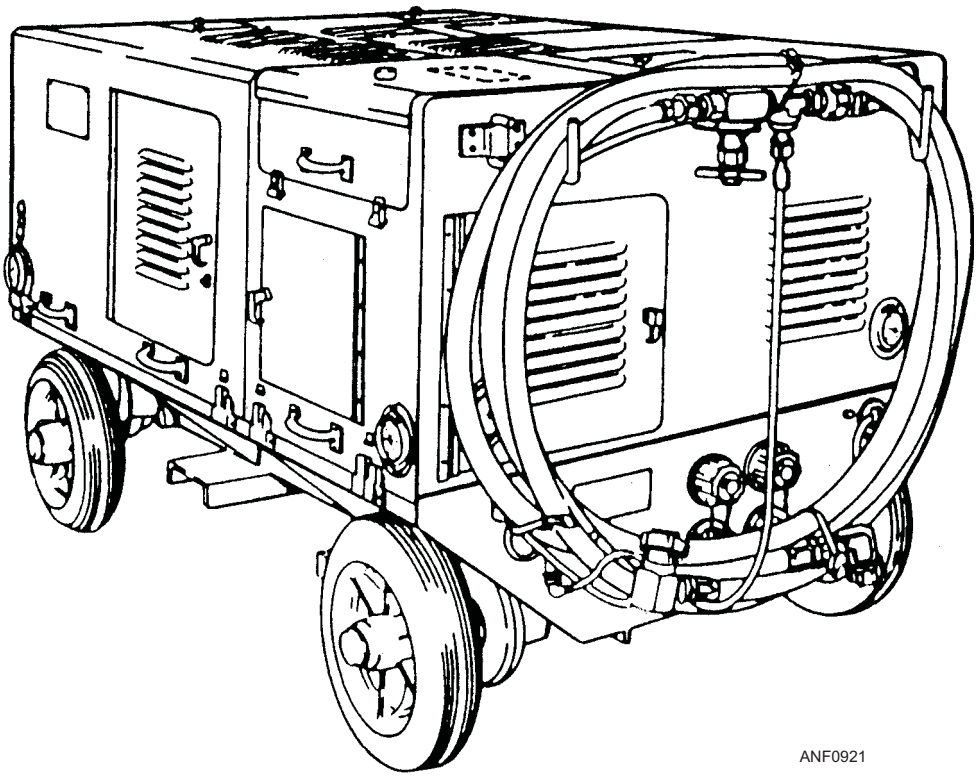

Figure 9-21.—A/M27T-5 hydraulic portable power supply.

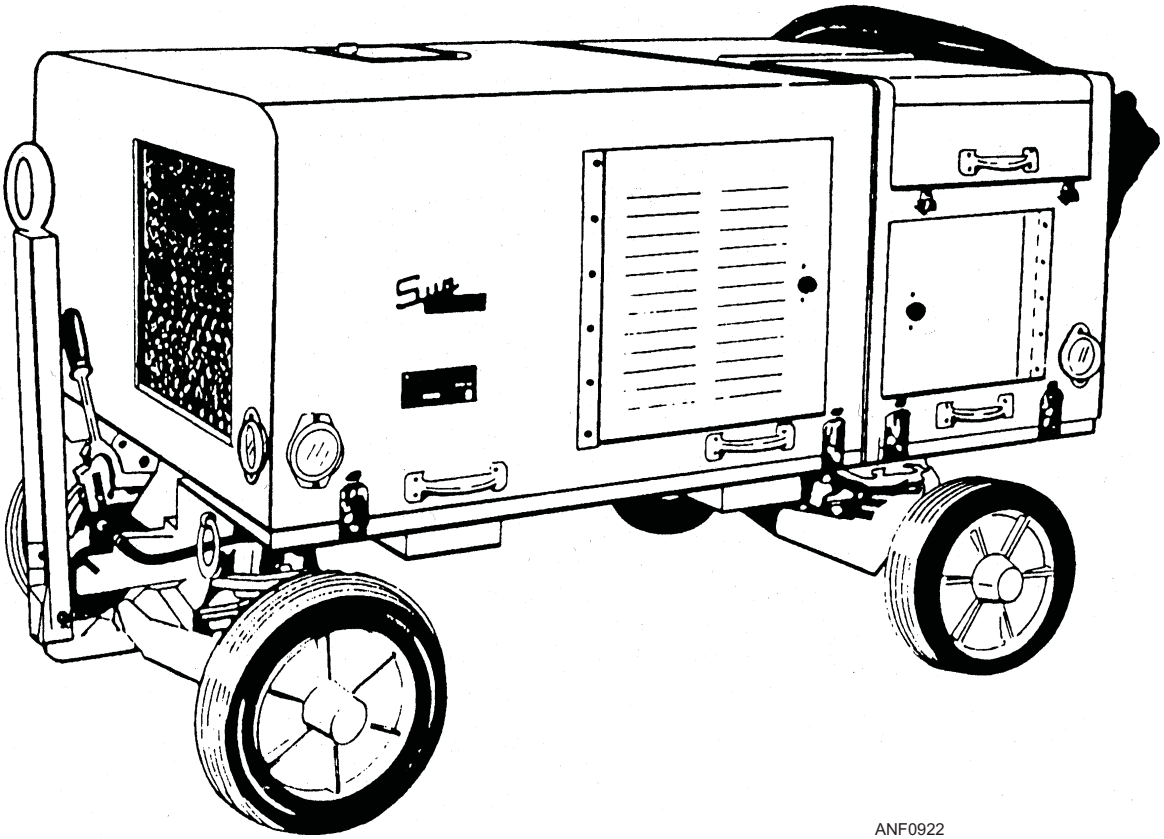

Figure 9-22.—A/M27T-7 hydraulic portable power supply.

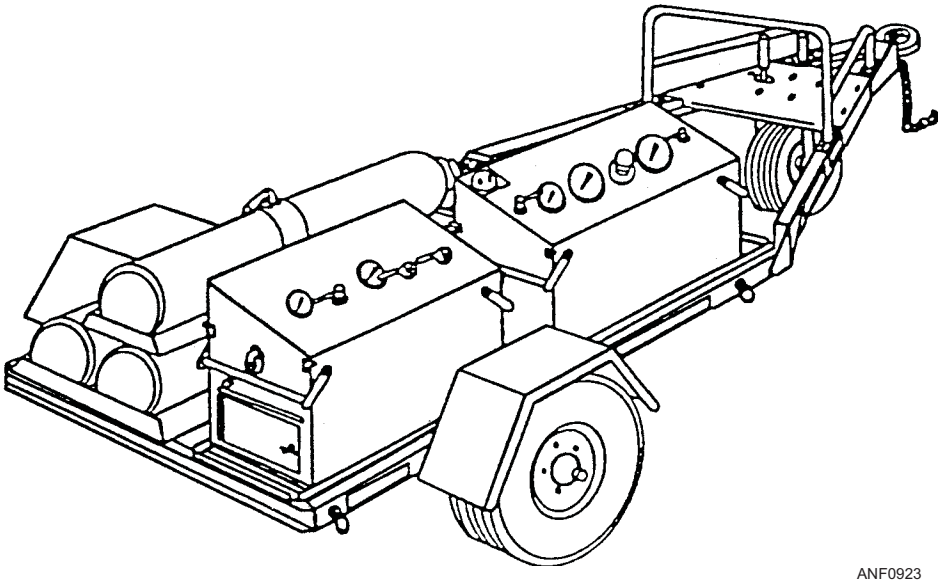

Figure 9-23.—A/U26U-1 oxygen servicing unit.

A/U26U-1 Oxygen Servicing Unit

The A/U26U-1 oxygen-servicing unit (fig. 9-23) is used to replenish oxygen storage cylinders and emergency bailout oxygen systems, which are installed in aircraft. The trailer has two fixed wheels and a retractable, rotatable caster wheel for movement by hand or towed by a tow tractor. The unit contains a nitrogen module, oxygen module, and three cylinders of gas. Two cylinders of nitrogen are used to drive the boost pump and one cylinder of oxygen is used for servicing. The modules contain the gas pressure and flow controls, boost pump, connectors, and safety devices within a protective case.

A/M26U-4 (NAN-4) Nitrogen Servicing Unit

The A/M26U-4 (NAN-4) nitrogen-servicing unit (fig. 9-24) provides a mobile source of compressed nitrogen to recharge aircraft nitrogen systems. It consists of a welded steel frame, two-wheel axle, a front retractable caster wheel, draw bar coupler ring for towing, tool and storage boxes, six compressed gas cylinders, and a manual hand brake. Nitrogen under pressure is transferred from the NAN-4 to the aircraft through a series of gauges, valves, manifold, filters, pressure regulator, and hoses. It is equipped with a boost pump that is capable of boosting nitrogen supply pressure up to a maximum of 3,500 psi.

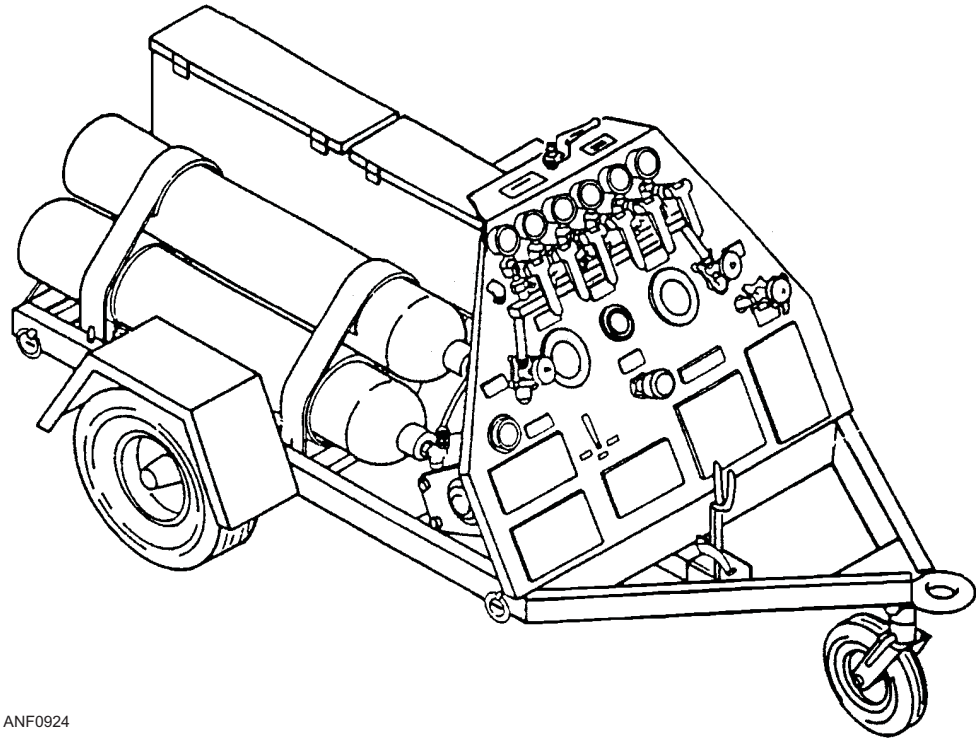

Figure 9-24.—A/M26U-4 (NAN-4) nitrogen servicing unit.

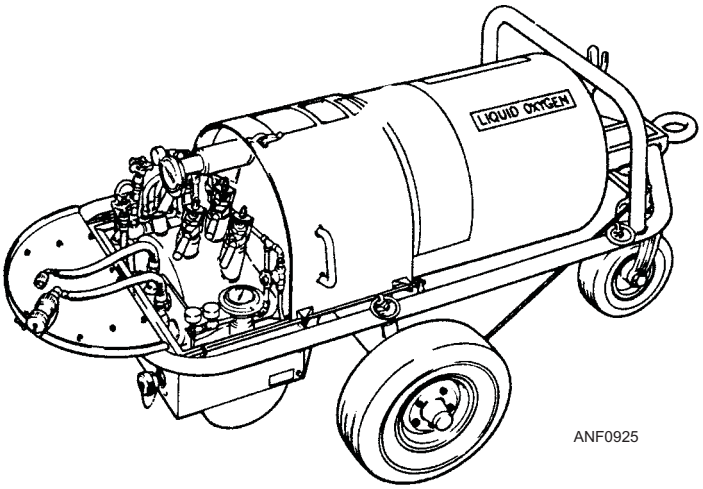

Figure 9-25.—TMU 70/M low-loss, closed-loop, liquid oxygen storage tank.

TMU 70/M Oxygen Storage Tank

The TMU 70/M (fig. 9-25) is a completely self-contained unit composed of three major components: a 50-gallon storage tank, a 15-liter transfer tank, and a system of transfer lines and control valves. The three components are permanently mounted on a portable three-wheel trailer. The trailer is equipped with a manually operated parking brake system and retractable caster wheel. The storage and transfer tanks have liquid level, pressure gauges, and pressure relief devices.

Mobile Air-Conditioning Units

Most modern aircraft are crammed with electronic equipment that generates tremendous amounts of heat and makes air conditioning a requirement in the air and on the ground. Air conditioning is normally provided by an onboard system, but the aircraft engines must be operating for the system to work. When on the ground, electronic equipment must run for long periods of time for maintenance, testing, or calibration. Therefore, some other means of air conditioning is needed, and that is the purpose of mobile air-conditioning units.

A/M32C-17 AIR-CONDITIONER.—The A/M32C-17 air-conditioner (fig. 9-26) is a mobile, four-wheel, trailer-mounted, self-contained, six- cylinder diesel powered unit that provides filtered air for cooling, dehumidifying, or ventilating of aircraft electronic equipment or cockpit/cabin areas during ground maintenance. The air-conditioning components are contained in a metal panel housing and assembled into a refrigeration system, a ventilation system, a hydraulic

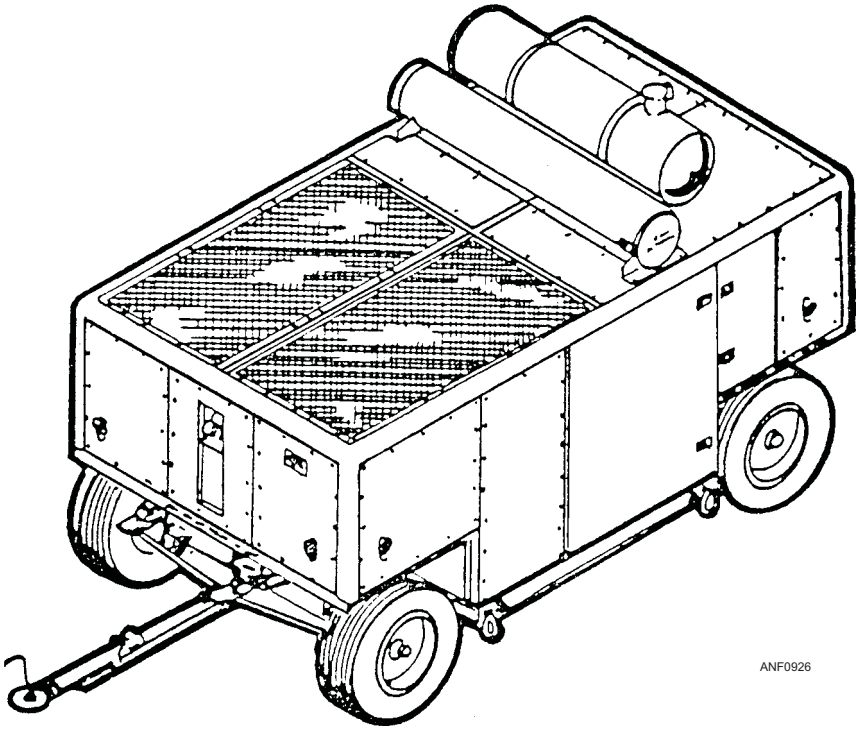

Figure 9-26.—A/M32C-17 air-conditioner.

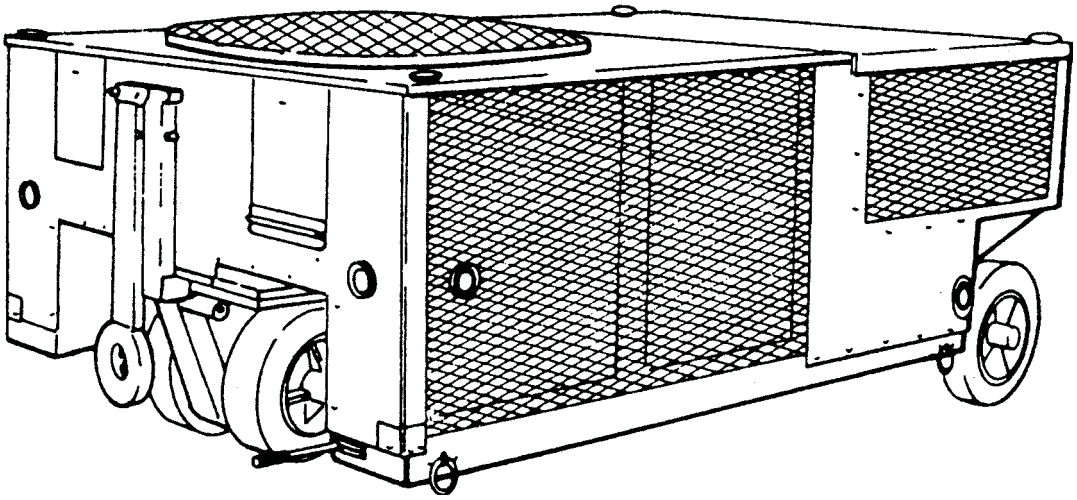

ANF0927

Figure 9-27.—A/M32C-21 air-conditioner.

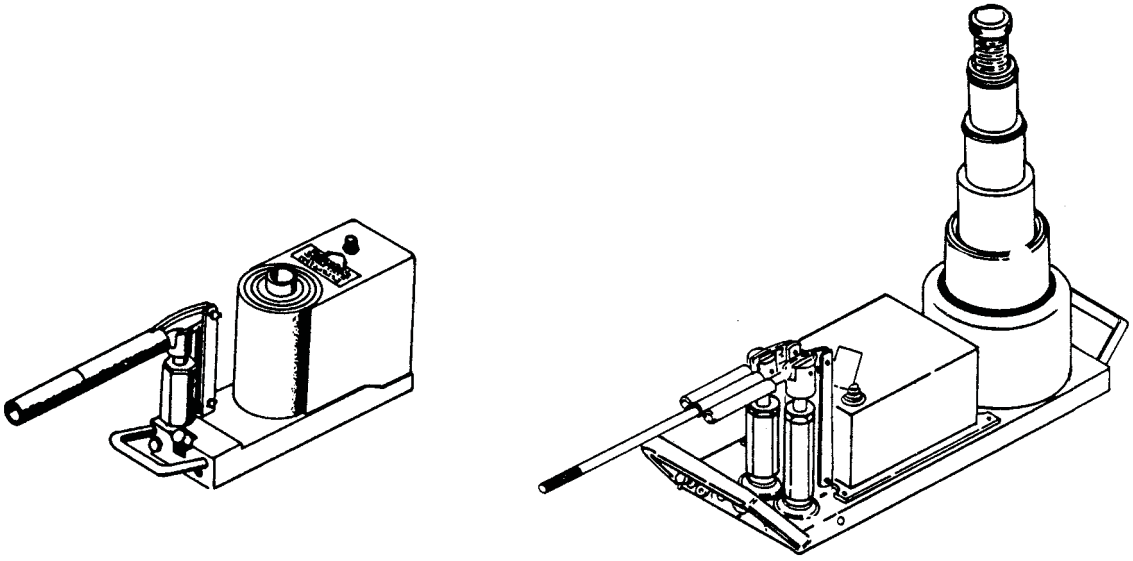

VIEW(A). AIRCRAFT AXLE JACKS

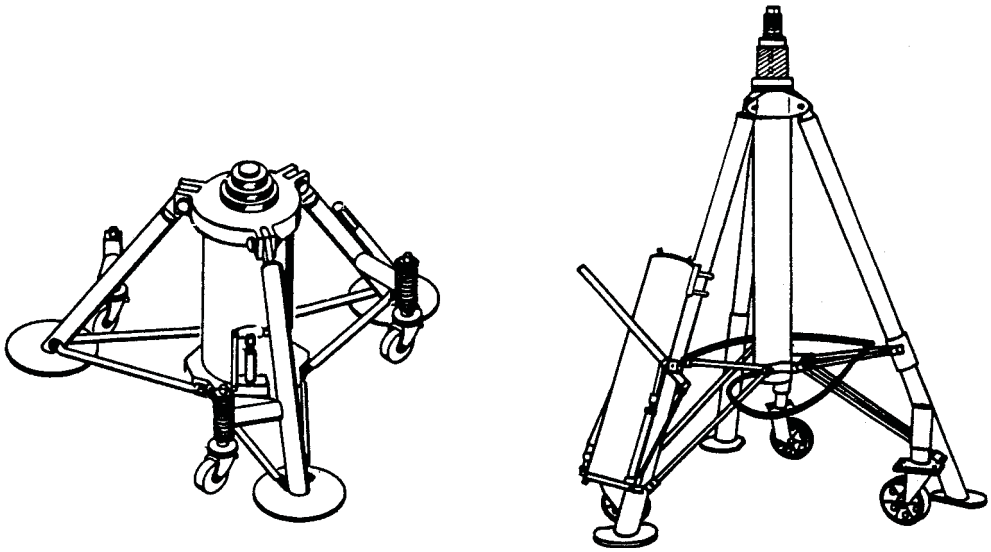

VIEW(B). AIRCRAFT TRIPOD JACKS

ANF0928

Figure 9-28.—Hydraulic jacks, (A) Aircraft axle jacks; (B) Aircraft tripod jacks.

system, and associated sensing and control components. The trailer has towing and steering capabilities and its own braking system. A collapsible air ducting hose connects to the aircraft and provides conditioned air.

A/M32C-21 AIR CONDITIONER.—The A/M32C-21 air-conditioner (fig. 9-27) is a mobile, four-wheel, trailer-mounted, electrically powered, self-contained unit powered by a 30-horsepower, 440-volt, 3-phase, 60-hertz ac electric motor that is an integral part of the six-cylinder reciprocating type compressor. A 30- to 50-foot external power cable, a 30-foot collapsible duct hose for aircraft connection, a collapsible tow bar for towing and steering, tie-down rings, and a manual parking brake are provided.

Hydraulic Jacks

Hydraulic jacks are frequently used in aircraft maintenance. Maintenance of the tires, wheels, brakes, and struts requires part or all of the aircraft to be lifted off the deck. The entire aircraft must be lifted off the deck to perform operational testing of the landing gear.

Different types and sizes of hydraulic jacks are needed. Some typical hydraulic jacks are described in the following paragraphs. The basic types are illustrated in figure 9-28.

AIRCRAFT AXLE JACKS.—The aircraft axle jack (fig. 9-28, view A) is a portable, self-contained, hydraulically operated unit. These jacks are used to raise the landing gear wheels off the deck to perform maintenance operations. The lift, a component of the base of the jacks, consists of three rams and an outer cylinder. A rectangular tank welded to the base forms the fluid reservoir.

AIRCRAFT TRIPOD JACKS.—The aircraft tripod jack (fig. 9-28, view B) is a portable, self-contained, hydraulically operated jack. These jacks are used for raising the wing, nose, or tail of an aircraft. When used in sufficient numbers and at the required jacking points, this jack can lift the complete aircraft off the deck. The jack consists of three main assemblies—a hydraulic cylinder, a tubular steel tripod leg structure with caster wheels, and a hydraulic pump assembly. The cylinder and ram are raised by manually operating the hydraulic pump.

Maintenance Platforms

Performing maintenance on aircraft does not always occur at ground level and often requires the use of a maintenance platform. There are several different models to use depending on type of aircraft, the maintenance requirement, and location. Two common maintenance platforms are the B-2 maintenance platform and the B-4 maintenance platform.

B-2 MAINTENANCE PLATFORM.—The B-2 maintenance platform (fig. 9-29) is a fixed height,

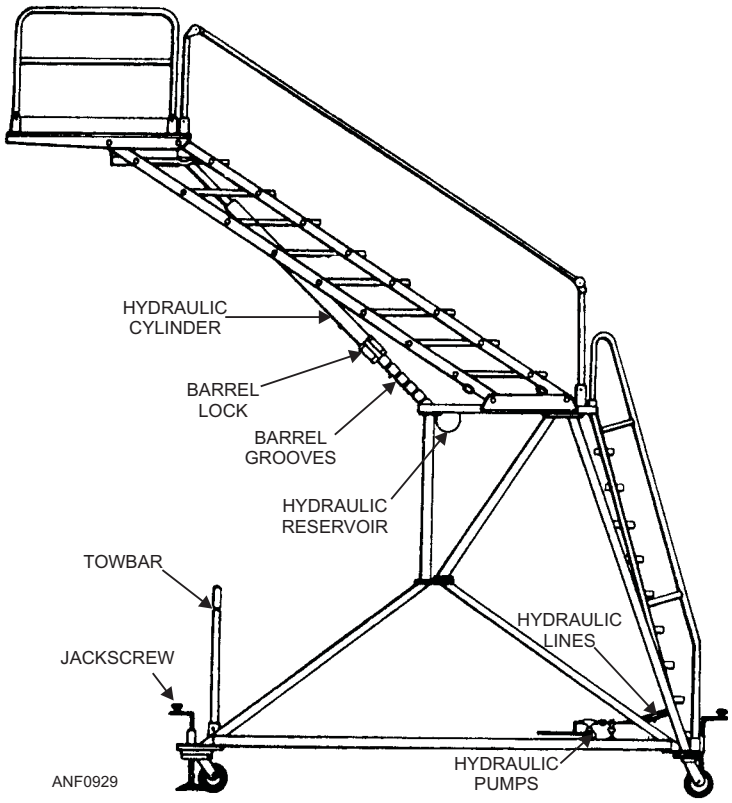

Figure 9-29.—B-2 maintenance platform.

10-foot lower structure, a variable height upper structure, and a manual pump actuated hydraulic system for raising and lowering the upper structure. The upper structure includes a work platform with guardrails and steps with handrails. The lower structure includes fixed steps and handrails, a towbar, and four free-swivel caster wheels with safety locking devices, four immobilizing jacks, and a hydraulic pump, lines, and reservoir. The height range for the B-2 work platform is from 13 feet to 20 feet, and it has a weight bearing capacity of 600 pounds.

B-4 MAINTENANCE PLATFORM.—The B-4 maintenance platform (fig. 9-30) is a moveable, hydraulically operated, adjustable platform with a ladder assembly. Four free-swivel caster wheels, each having a foot-lever actuated mechanical brake and swivel lock mechanism, are included. The platform is equipped with safety guardrails, handrails for the ladder, two safety lock pins, which are inserted into the frame to lock the extension scissors of the platform. A hydraulic hand pump with reservoir is provided for raising and lowering the platform. The adjustable height range for the B-4 work platform is from 3 to 7 feet and a weight bearing capacity of 600 pounds.

Q9-1. What are the two types of support equipment?

Q9-2. The primary function of the A/S32A-30 tow tractor is to tow what aircraft or equipment?

Q9-3. What tow tractor is designed for towing aircraft aboard ship?

Q9-4. What type of tow tractor is designed to tow, turn, and position aircraft within the confines of an aircraft carrier hangar deck and is often called "The Spotting Dolly"?

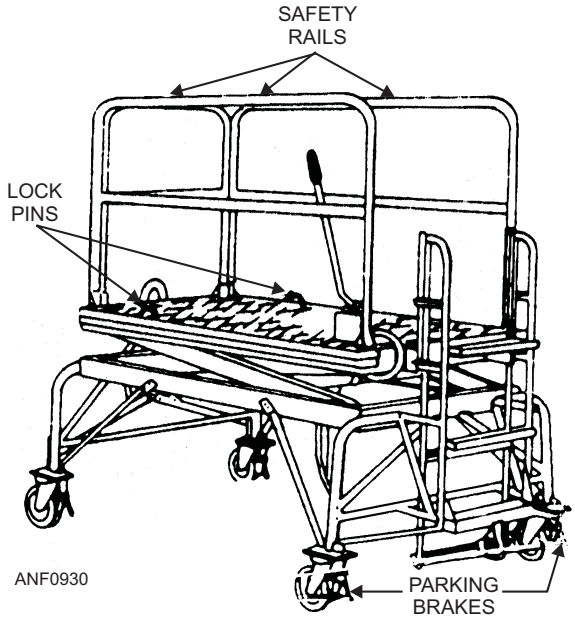

Figure 9-30.—B-4 maintenance platform.

Q9-5. What aircraft crash handling and salvage crane is used on amphibious assault ships?

Q9-6. Aboard ship, what is the primary fire-fighting and rescue vehicle?

Q9-7. What fire-fighting agents are contained in the twinned agent unit (TAU-2H)?

Q9-8. What activity is tasked with maintenance of forklifts aboard naval stations?

Q9-9. What mobile electric power plant is designed primarily for use on aircraft carriers?

Q9-10. What type of motor propels the NC-8A mobile electric power plant?

Q9-11. What is the danger associated with operating the NC-8A or NC-10C when aircraft are serviced?

Q9-12. The A/M47A-4 jet aircraft start unit provides what support for starting aircraft?

Q9-13. What are some of the dangers associated with operating a jet aircraft start unit?

Q9-14. The A/M27T-5 is used to service what aircraft system?

Q9-15. How many nitrogen gas cylinders are mounted on the A/M26U-4 (NAN-4) servicing unit?

Q9-16. What are the major components on the TMU 70/M oxygen storage tank?

Q9-17. What is the purpose of having mobile air-conditioning units?

Q9-18. What type of aircraft jack is used to raise the entire aircraft off the deck?

Q9-19. What is the weight bearing capacity of the B-4 maintenance platform?

MAINTENANCE REQUIREMENTS

LEARNING OBJECTIVE: Identify the purpose for support equipment preoperational maintenance and the requirements for support equipment training, licensing, and misuse/abuse.

You, as an Airman Apprentice, are not responsible for maintaining support equipment, unless you are striking for Aviation Support Equipment Technician. You will, however, be required to operate support

equipment and perform preoperational maintenance. Preoperational maintenance is like checking your automobile before you drive it; that is, checking your oil, tire pressure, battery, radiator, and so forth.

The point is, if the support equipment unit has developed a problem, return it to the support equipment shop. Let the technicians work on it. They have had the training. Most support equipment is dangerous. The MEPPs, for instance, produce 1,000 amps, which is more than enough to electrocute you. Hydraulic units have working pressures as high as 5,000 psi. You do the operating and leave the maintenance to the technicians.

The three levels of naval aviation maintenance are organizational, intermediate, and depot. Organizational maintenance is the general upkeep of aircraft that is preformed by aviation squadrons. Intermediate maintenance is performed at AIMDs, and includes component inspection, disassembly, repair, reassembly, testing, and fabrication. Depot-level maintenance is normally the complete repair of the entire aircraft and systems. You will most likely be concerned with the organizational level.

PREOPERATIONAL MAINTENANCE

Preoperational maintenance is performed by organizational and intermediate maintenance personnel. A preoperational card is used to inspect support equipment prior to its use. All support equipment you operate will have a preoperational card specific to the type of equipment. The card is easy to use and must be completed in the numerical sequence, and it must be accomplished prior to the first use of the day and any use thereafter. All types of support equipment require a preoperational check before each use. The preoperational card does not state how to repair, make adjustments, or correct defective conditions. These functions are performed in AIMD.

QUALIFICATIONS FOR OPERATING SE

As a direct result of support equipment accidents, the Navy established a Support Equipment Operator Training and Licensing Program. The purpose of the program is to make sure you receive effective training in the safe and efficient operation of specific aircraft support equipment, as prescribed in the Naval Aviation Maintenance Program (NAMP), OPNAVINST 4790.2 (series). You cannot, without great risk, properly or safely move, secure, service, or maintain an aircraft using support equipment unless you are completely trained and qualified on both the support equipment and the aircraft.

Training

The SE Operator Training and Licensing Program has two distinct parts—Phase 1 and Phase 2. Phase 1 covers the support equipment, and Phase 2 covers the operation or use of the support equipment on a specific type of aircraft. You get your Phase 1 training from AS ratings at the support equipment school sponsored by AIMD. This school covers daily pre/post operational inspections, safety, appropriate gear, and operating procedures on each specific type of equipment. Phase 2 training is handled by your own squadron or unit. Usually, the program is managed by the line division and monitored by quality assurance (QA). This is practical on-the-job training, relating what you learn in support equipment school with actual aircraft handling, servicing, or maintenance. While in Phase 2 training, you are under the direct supervision of a qualified and licensed operator of the support equipment you are using.

Licensing

Once you complete training, you are eligible for a USN Aviation Support Equipment Operator's License (OPNAV 4790/102), commonly known as a "yellow license." This license is required to check out certain types of support equipment from the AIMD support equipment division and/or to operate the support equipment. When you complete Phase 1, a certificate of completion is issued to your unit. It certifies completion of Phase 1 training **only** and **does not** authorize you to operate any given piece of support equipment. When you complete Phase 2 training in your unit, you are issued your "yellow license," which is signed by your commanding officer (or the aircraft maintenance officer if he/she is so authorized in writing by the commanding officer). Your "yellow license" is good for 3 years from the date issued for each specific type of support equipment and aircraft. After 3 years you must requalify. If you transfer to a new outfit with different types of aircraft, your license is not valid. You must requalify under Phase 2 training for the new types of aircraft and be issued a new license.

Misuse/Abuse

Your commanding officer has the responsibility to revoke your yellow license under the following conditions:

- You display unsafe operator habits or behavioral traits that constitute unsafe or abusive use of support equipment.
- Your State Motor Vehicle Operator's License becomes invalid (applies to self-propelled support equipment only).
- You intentionally misuse or abuse support equipment. Once your yellow license has been revoked, you must go through the entire Phase 1 and Phase 2 training to requalify for a new license.

Local misuse or abuse forms are generally available and may be submitted by anyone witnessing misuse or abuse regardless of the command to which the person is attached. It is common practice aboard stations for the support equipment division to have roving patrols to observe and report misuse, abuse, and discrepancies in all areas and spaces where support equipment is used. Reports can, and do, result in disciplinary action for improper operation, negligence, or vandalism.

NOTE: For additional information concerning support equipment (SE) training, licensing, and misuse/abuse, refer to Naval Aviation Maintenance Program (NAMP), OPNAVINST 4790.2 (series).

Q9-20. What is the purpose of a preoperational card for support equipment?

Q9-21. What total number of phases are there in the Support Equipment Training and Licensing Program?

Q9-22. What division is normally responsible for phase 2 training of support equipment?

Q9-23. How long is your support equipment "yellow license" good for from date of issue?

Q9-24. Who must sign your "yellow license" before you are allowed to operate support equipment?

Q9-25. Who can submit a misuse/abuse report?

Q9-26. What instruction contains all the information concerning support equipment (SE) training, licensing, and misuse/abuse?

SUMMARY

In this chapter you have identified the purpose and function of different types of support equipment, handling and servicing equipment, maintenance requirements, preoperational inspections, and the requirements for support equipment training, licensing, and misuse/abuse.

ASSIGNMENT 9

Textbook Assignment: "Support Equipment," chapter 9, pages 9-1 through 9-20.

9-1. Which of the following departments aboard ship are principal users of support equipment?

1. Deck
2. Operations
3. Air
4. Supply

9-2. The Navy uses how many general types of support equipment?

1. One
2. Two
3. Three
4. Four

9-3. Which of the following tow tractors is designed for towing aircraft servicing equipment, work stands, and armament handling equipment?

1. A/S32A-30
2. A/S23A-30A
3. A/S32A-31
4. A/S32A-31A

9-4. What is the towing capacity of the A/S32A-30A tow tractor?

1. 10,000 pounds
2. 20,000 pounds
3. 30,000 pounds
4. 40,000 pounds

9-5. Which of the following tow tractors is designed for towing aircraft aboard ship?

1. A/S32A-30
2. A/S23A-30A
3. A/S32A-31
4. A/S32A-31A

9-6. What is another name for the A/S32A-32 tow tractor?

1. "Big Bertha"
2. "Spotting Dolly"
3. "Joystick"
4. "Grappler"

9-7. Which of the following features of the A/S32A-32 tow tractor is NOT found on other tractors?

1. A diesel engine
2. Pintle hook
3. Lifting arms
4. A drivers seat

9-8. What is the towing capacity of the A/S32A-42 mid-range tow vehicle?

1. 25,000 pounds
2. 50,000 pounds
3. 75,000 pounds
4. 100,000 pounds

9-9. Which of the following letter identifiers apply to the aircraft carrier crash handling and salvage crane?

1. CVCC
2. AACC
3. AVCC
4. AVCA

9-10. Which of the following letter identifiers apply to an amphibious assault ship crash handling and salvage crane?

1. CVCC
2. AACC
3. AVCC
4. CVCA

9-11. What component provides dynamic vehicle braking on the A/S32P-25 shipboard fire-fighting vehicle?

1. Hydrostatic drive system
2. Hydraulic reservoir
3. Pneumatic pump
4. Brake master cylinder

9-12. Which of the following fire-fighting agents are carried on the A/S32P-25 shipboard fire-fighting vehicle?

1. CO_2 and PKP
2. AFFF and CO_2
3. AFFF and Halon 1211
4. Water and AFFF

9-13. What class of fire is the Twinned Agent Unit (TAU-2H) primarily designed to extinguish?

1. Class A
2. Class B
3. Class C
4. Class D

9-14. What propels the fire-extinguishing agents on the Twinned Agent Unit (TAU-2H)?

1. Carbon dioxide
2. Oxygen
3. Compressed air
4. Nitrogen

9-15. How many degrees of rotation is provided for the superstructure on the A/S32M-14 aircraft maintenance crane?

1. 180°
2. 270°
3. 360°
4. 375°

9-16. Which of the following activities is tasked with maintenance of forklifts aboard a naval station?

1. Supply department
2. Base operations
3. Public works
4. AIMD

9-17. When operating the flight deck scrubber, how do you recover the solution and debris?

1. Rotating cylindrical brushes
2. Vacuum recovery system
3. Rear squeegee
4. Debris hopper

9-18. The purpose of servicing equipment is to provide compressed nitrogen or air, electrical and hydraulic power, and air-conditioning for aircraft functions while the aircraft is on the ground.

1. True
2. False

9-19. Which of the following electrical power plants is designed primarily for use aboard aircraft carriers?

1. MMG-1A
2. NC-8A
3. NC-2A
4. NC-10C

9-20. Which of the following mobile or trailer mounted electrical power plants deliver 115/200-volt, 3-phase, 400-hertz ac and 28 volts of dc power?

1. NC-2A
2. NC-8A
3. NC-10C
4. Each of the above

9-21. Which of the following types of motors or engines propel the NC-8A?

1. Electric motor
2. Gasoline engine
3. Diesel engine
4. Hydraulic motor

9-22. Where are the ac and dc electrical cables stored on the NC-10C?

1. On two flaking hooks at the rear of the unit
2. Spring-loaded reels next to the control panel
3. In a wire mesh cage on top of the removable cowling
4. Inside a hinged door compartment at the front of the unit

9-23. Which of the following mobile electric power plants is/are equipped with a tow bar for towing and steering?

1. NC-2A
2. NC-10C only
3. MMG-1A only
4. NC-10C and MMG-1A

9-24. What does the A/M47A-4 jet aircraft start unit provide for starting jet aircraft engines?

1. Fuel and compressed air
2. Hydraulic pressure and electrical power
3. Compressed air and electrical power
4. Fuel and hydraulic pressure

9-25. Which of the following hazards is associated with the operation of a gas turbine compressor (GTC)?

1. High volume air pressure and extreme exhaust temperatures
2. Jet intake suction and high noise levels
3. Unqualified operators
4. Each of the above

9-26. What aircraft system is serviced using the A/M27T-5?

1. Pneumatic
2. Nitrogen
3. Hydraulic
4. Oxygen

9-27. What is the rated capacity of the A/M27T-5 hydraulic portable power supply?

1. 10 gpm at 2,000 psi and 20 gpm at 3,000 psi
2. 20 gpm at 3,000 psi and 10 gpm at 5,000 psi
3. 30 gpm at 4,000 psi and 5 gpm at 5,000 psi
4. 25 gpm at 2,500 psi and 5 gpm at 6,000 psi

9-28. The A/M27T-5 hydraulic portable power supply is powered by a diesel engine.

1. True
2. False

9-29. The A/M27T-7 hydraulic portable power supply is powered by an electric motor.

1. True
2. False

9-30. On the A/U26U-1 oxygen servicing unit, how many cylinders of nitrogen are used to drive the boost pump?

1. One
2. Two
3. Three
4. Four

9-31. How many nitrogen cylinders are mounted on the A/M26U-4 (NAN-4)?

1. Two
2. Four
3. Six
4. Eight

9-32. What is the maximum nitrogen supply boost pump pressure on the NAN-4?

1. 2,500 psi
2. 3,500 psi
3. 4,500 psi
4. 5,500 psi

9-33. What are the major components on the TMU 70/M oxygen storage tank?

1. Control valves, storage tank, and transfer tank
2. Gas cylinders, control valves, and transfer tank
3. Control valves, storage tank, and pump
4. Storage tank, control box, and pump

9-34. What is the purpose of using mobile air-conditioning units?

1. Cooling and ventilating aircraft electronic equipment
2. Dehumidifying the cockpit and cabin during ground maintenance
3. Alleviate the need for running the aircraft engines for long periods of time
4. Each of the above

9-35. How many systems are contained in the A/M32C-17 mobile air-conditioner?

1. One
2. Two
3. Three
4. Four

9-36. The A/M32C-21 mobile air-conditioner is powered by what source?

1. Electric motor
2. Diesel engine
3. Gasoline engine
4. External power

9-37. Which of the following aircraft jacks is used to raise the landing gear wheels off the deck to perform maintenance operations?

1. Tripod jack
2. Axle jack
3. Fixed height jack
4. Pneumatic jack

9-38. Which of the following aircraft jacks is used for raising the wing, nose, or tail of an aircraft?

1. Tripod jack
2. Axle jack
3. Fixed height jack
4. Pneumatic jack

9-39. What operates the variable height upper structure on the B-2 maintenance platform?

1. Mechanical scissors
2. Telescopic cylinders
3. Manual pump-actuated hydraulic system
4. Immobilizing jacks

9-40. What is the weight bearing capacity of the B-4 maintenance platform?

1. 200 pounds
2. 400 pounds
3. 600 pounds
4. 800 pounds

9-41. As an Airman Apprentice, you are not responsible for maintaining support equipment unless you are striking for Aviation Support Equipment Technician.

1. True
2. False

9-42. Which of the following dangers are associated with operating a MEPP?

1. High fluid pressure
2. High voltage
3. Hot exhaust temperatures
4. Intake suction

9-43. What total number of levels of maintenance are available in naval aviation?

1. One
2. Two
3. Three
4. Four

9-44. What level of aircraft maintenance is responsible for component inspection, disassembly, repair, reassembly, testing, and fabrication?

1. Organizational
2. Intermediate
3. Depot

9-45. Which of the following publications must you use to inspect support equipment prior to its use?

1. Maintenance manual
2. Operations manual
3. Maintenance requirements card
4. Preoperational card

9-46. How often must a preoperational card be used when inspecting support equipment?

1. First thing in the morning only
2. Every other day if the equipment has not been used
3. Prior to the first use of the day and any use thereafter
4. At the end of the day

9-47. Which, if any, of the following functions will be stated on the preoperational card?

1. How to make a minor repair
2. Make adjustments
3. Correct defective conditions
4. None of the above

9-48. What publication governs the Support Equipment Operator Training and Licensing Program?

1. *Naval Aviation Maintenance Program* (*NAMP*), OPNAVINST 4790.2
2. *Aviation Support Equipment Technician 3 & 2*, Vols. 1 & 2, NAVEDTRA 12385
3. *Aviation Support Equipment Basic Handling and Safety Manual*, NAVAIR 00-80T-96
4. *Aviation Support Equipment General Operating Procedures Manual*, NAVAIR 17-1-128

9-49. What total number of training phases are there in the Support Equipment Operator Training and Licensing Program?

1. One
2. Two
3. Three
4. Four

9-50. Where would you receive support equipment phase 1 training?

1. Aboard ship
2. Squadron
3. AIMD sponsored school
4. Support equipment "A" school

9-51. Which of the following divisions has the responsibility for monitoring the Support Equipment Operator Training and Licensing Program?

1. Quality assurance
2. Line
3. Support equipment
4. Maintenance

9-52. What is the Support Equipment Operator's License commonly known as?

1. White license
2. SE card
3. Yellow license
4. Operator's license

9-53. Completion of support equipment Phase 1 training at an AIMD-sponsored school certifies completion of Phase 1 training only and does not authorize you to operate any given piece of support equipment.

1. True
2. False

9-54. Which of the following persons authorizes and signs your "yellow license" upon completion of Phase 2 training?

1. Commanding officer only
2. Maintenance officer only
3. Commanding officer or maintenance officer
4. Quality Assurance Officer

9-55. From the date of issue, your yellow license is good for what total number of years?

1. One
2. Two
3. Three
4. Four

9-56. Upon witnessing a support equipment misuse or abuse violation, which of the following personnel may submit a misuse and abuse form?

1. Maintenance officer
2. Supply officer
3. Chief petty officer
4. Anyone witnessing misuse or abuse

CHAPTER 10

LINE OPERATIONS AND SAFETY

INTRODUCTION

One of the busiest, most important and dangerous divisions in a squadron is the line division. Upon reporting to a squadron, no matter your rate or paygrade, you may be assigned to the line division. As an Airman, or third class petty officer, you may become a plane captain. A plane captain has many responsibilities in flight operations and the day-to-day maintenance and upkeep of modern aircraft. You will be required to operate support equipment (SE), handle, secure, and service aircraft. You must also be aware of the related safety precautions to reduce personal injury, aircraft and equipment damage, and prevent a loss of operational readiness due to ground accidents. This chapter outlines some of these crucial factors.

OPERATING EQUIPMENT AROUND AIRCRAFT

LEARNING OBJECTIVE: Identify the proper procedures for operating ground support equipment near or around aircraft, the safety precautions and hazards involved, and support equipment color identification.

When mobile equipment is used around aircraft, certain operating techniques, handling procedures, and safety precautions are followed to reduce the number of accidents, to prevent damage to aircraft and equipment, and to ensure the safety of personnel. The following operating techniques and handling procedures should be followed:

- Vehicles should not pass under any part of a parked aircraft. Where such passing is absolutely necessary, the vehicle must come to a complete stop and, before proceeding, a visual check must be made to ensure that sufficient clearance exists.
- Vehicles carrying passengers must stop only at the boarding entrance and clear of aircraft while loading or unloading passengers.
- Riding on fenders, hoods, running boards, or any place not intended for passengers is strictly prohibited.
- Personnel involved in the towing of aircraft must be alert and exercise extreme care.
- Tractor drivers must always maintain a safe distance from parked aircraft and be on the alert for movements of other aircraft.
- Motorized vehicles used to service aircraft or those used near aircraft must be driven or parked adjacent to aircraft so that inadvertent movement of the vehicle will not result in a collision.
- When aircraft are serviced, all refueling vehicles should be parked forward of the aircraft and parallel to the wing. The refueling vehicle should be parked at a point as distant from the aircraft as the length of hose permits, and preferably to the windward (upwind) side of the aircraft.
- If it is necessary to park near a parked aircraft, the hand brake of a motorized vehicle must be set and the ignition turned off. If the service being rendered requires running the motor, the motorized vehicle must be manned.
- The speed limit for operating vehicles on airfields in the vicinity of aircraft and hangars (50 feet) is 5 mph.
- On runways, taxiways, parking areas, ramps, and work areas, the speed limit is 10 mph.
- When aircraft are towed, the towing speed should **never** be faster than the slowest person can walk or exceed 5 miles per hour.
- Sudden starts and stops must be avoided. Extreme caution must be exercised when an aircraft is towed over unprepared surfaces or into or through a congested area.

HAZARDS OF SUPPORT EQUIPMENT (SE)

Tow tractors, electrical power units, hydraulic jennys, jet aircraft start units, air conditioners, nitrogen carts, work stands, jacks, floodlight carts and utility vehicles are mostly big, heavy, clumsy, noisy, and

dangerous. You should always be aware of the following SE hazards.

- Smoking or having an open flame around or near aircraft and fueling equipment is strictly **prohibited**.
- **Never** operate support equipment that you are not licensed and qualified to operate.
- High voltage can zap you and aircraft electric systems without warning.
- High pressure air or hydraulics can blow up hoses, equipment, aircraft systems, or personnel.
- Contamination, (water, dirt, grease, oil, trash, FOD) when introduced to the wrong system, can ruin an aircraft, support equipment, or injure personnel.
- Unfamiliar controls on support equipment can cause you to go in directions you didn't intend.
- Cables and hoses hooked up to aircraft incorrectly or when they shouldn't be.
- Avoid breathing fuel vapors and noxious gases that can make you sick or kill you.
- Defective, nonstandard, or jury-rigged hoses, cables, plugs, and devices that can kill you or damage an aircraft.
- Avoid loud noises by wearing appropriate hearing protection.
- Driver's seats that restrict visibility can cause you to run over people, equipment, or aircraft.
- Crankcases and radiators ruin an engine when they run dry.
- Jacks or work stands that collapse because of neglect or improper use can spoil your day.

COLOR MARKINGS OF EQUIPMENT

All handling and servicing equipment used around aircraft have standard colors and markings. This is necessary so that the equipment and markings can be seen easily by pilots taking off, landing, or taxiing in aircraft, or by tower operators. These colors and markings identify the equipment as being authorized for use around aircraft on flight decks, hanger bays, parking ramps, taxiways, and runways. Most support equipment (SE) is painted yellow and/or white with reflective tape strips on the corners. The front and rear bumpers are painted with alternate black and yellow stripes at a 45-degree angle. Danger areas, such as intakes/exhaust and front/rear pintels for attaching tow bars, are painted red.

Q10-1. What is the maximum aircraft towing speed?

Q10-2. What color is support equipment painted?

AIR OPERATIONS ABOARD A CARRIER

LEARNING OBJECTIVE: Recognize aircraft handling activities to include signaling, spotting, launching, landing, securing, and general safety precautions on board aircraft carriers (CVs/CVNs).

The combined efforts of officers and crewmen are necessary to conduct effective air operations on an aircraft carrier. There are those who have prepared the plans, briefed the pilots, plotted the weather, and fueled and armed the aircraft. There are others who assist in launching and landing the aircraft. After the aircraft have returned, there are still others who check the results, debrief with the pilots, interpret the photographic findings, and refuel and rearm in preparation for the next flight. The efficient and coordinated efforts of all persons concerned are of vital importance to the success of the operation.

As part of this team, personnel whose duties require them to work on the flight deck must wear the proper flight deck uniform. All personnel must wear a cranial impact helmet with liner, goggles, and sound attenuators (fig. 10-1). Personnel who work on the flight deck must also wear long sleeve jerseys and trousers, flight deck shoes, an inflatable life preserver outfitted with distress light marker, sea dye marker, and a secured whistle (fig. 10-2). All personnel assigned flight quarters stations on or above the hangar deck level must wear this uniform as described in table 10-1. Notice the different colors identifying different assignments or jobs.

PLANE-HANDLING CREWS

The V-1 division is responsible for handling aircraft on the flight deck, and the V-3 division is charged with this responsibility for the hangar deck. The personnel, other than plane directors, assigned to handling crews are usually Airmen from these divisions.

A complete handling crew normally consists of a director, crew leader, one safety man, and six to ten Airmen. The director is usually an ABH, and is the only

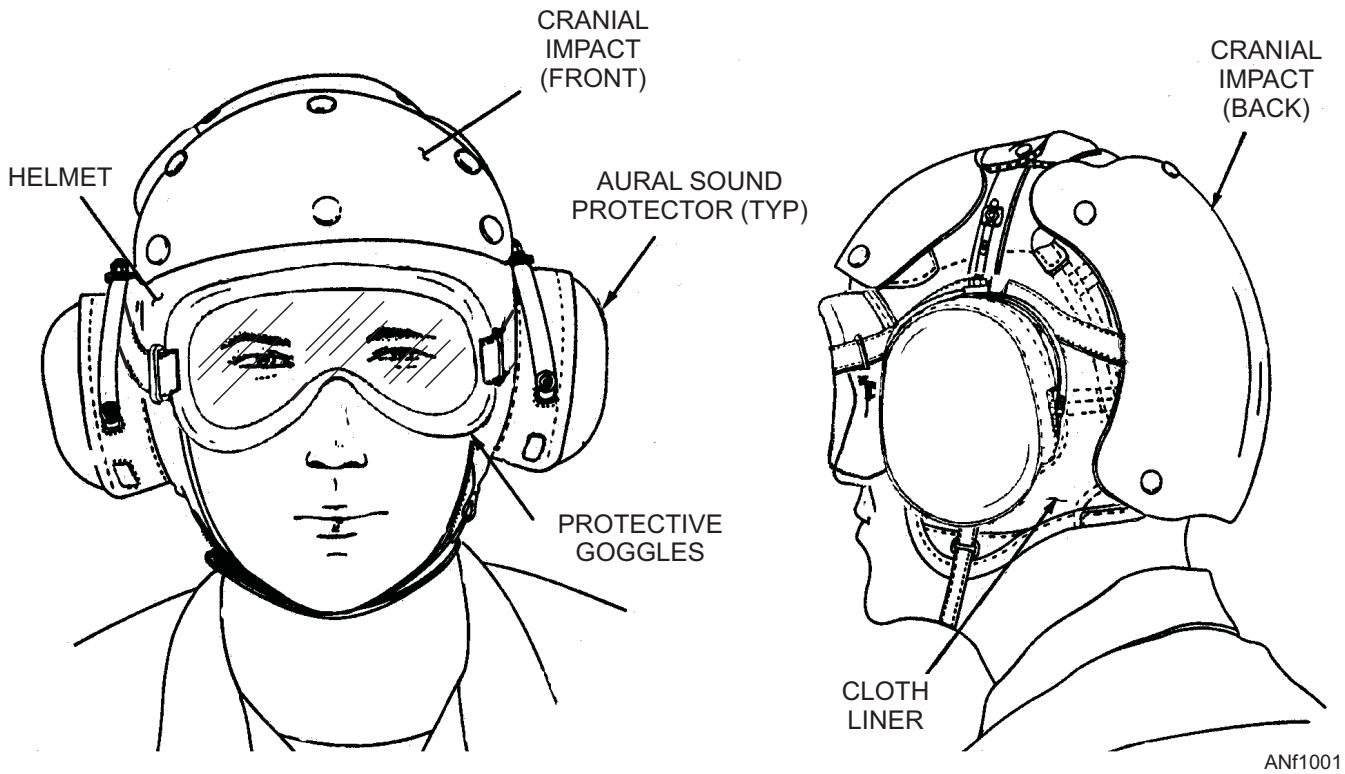

Figure 10-1.—Cranial helmet assembly.

petty officer in the crew. He is responsible for the crew and directs them in the movement of aircraft.

The crew leader acts as the director's assistant, and is in charge of the crew in the absence of the director.

Crew members are stationed near the wing tips on the opposite side of the aircraft and act as wing walkers. One crew member is referred to as the safety man. It is his/her duty to keep the director informed about the safety of the aircraft and to prevent accidental damage and personal injury.

Two of the crew members serve as chockmen. They tend the chocks, removing them and chocking the aircraft when the director gives the signal.

When aircraft are moved on the hangar deck, directors must make sure they do not hit bulkheads, hangar deck fixtures, support equipment, or other aircraft. The handling crew safety men are in the best position to prevent collisions of this sort.

It is the plane director's responsibility to keep the crew thoroughly informed about safety precautions for handling aircraft. Each crew member must know his/her responsibility as an individual and as a member of the plane-handling crew. A good plane director must be able to obtain maximum efficiency from his/her crew.

When aircraft are being moved on the flight deck or hangar bay by handling crews, verbal orders (with or without radio headsets), hand signals, and whistles are used in giving directions. You must remember that the noise level on an operating carrier during landing and launching operations is very high. All verbal orders must be given in a loud and clear manner. Indistinct directions or orders may lead to costly accidents. When a high noise level can cause misunderstanding, the plane director must make sure that directions are understood by some form of return signal from his crewmen.

In most cases the aircraft cockpit is manned during a move. This person acts as a brake rider, and **only** qualified personnel are allowed to perform this task. When moving an aircraft by pushing, handling crews must know the proper positions for pushing to prevent damage to the aircraft. Crews must also know the correct use of handling equipment and the proper use of aircraft securing equipment.

LAUNCHING PROCEDURE

As soon as the flight requirements for a launch are known, the aircraft handling officer holds a briefing, which is attended by key flight deck personnel, including flight directors, spotters, catapult and

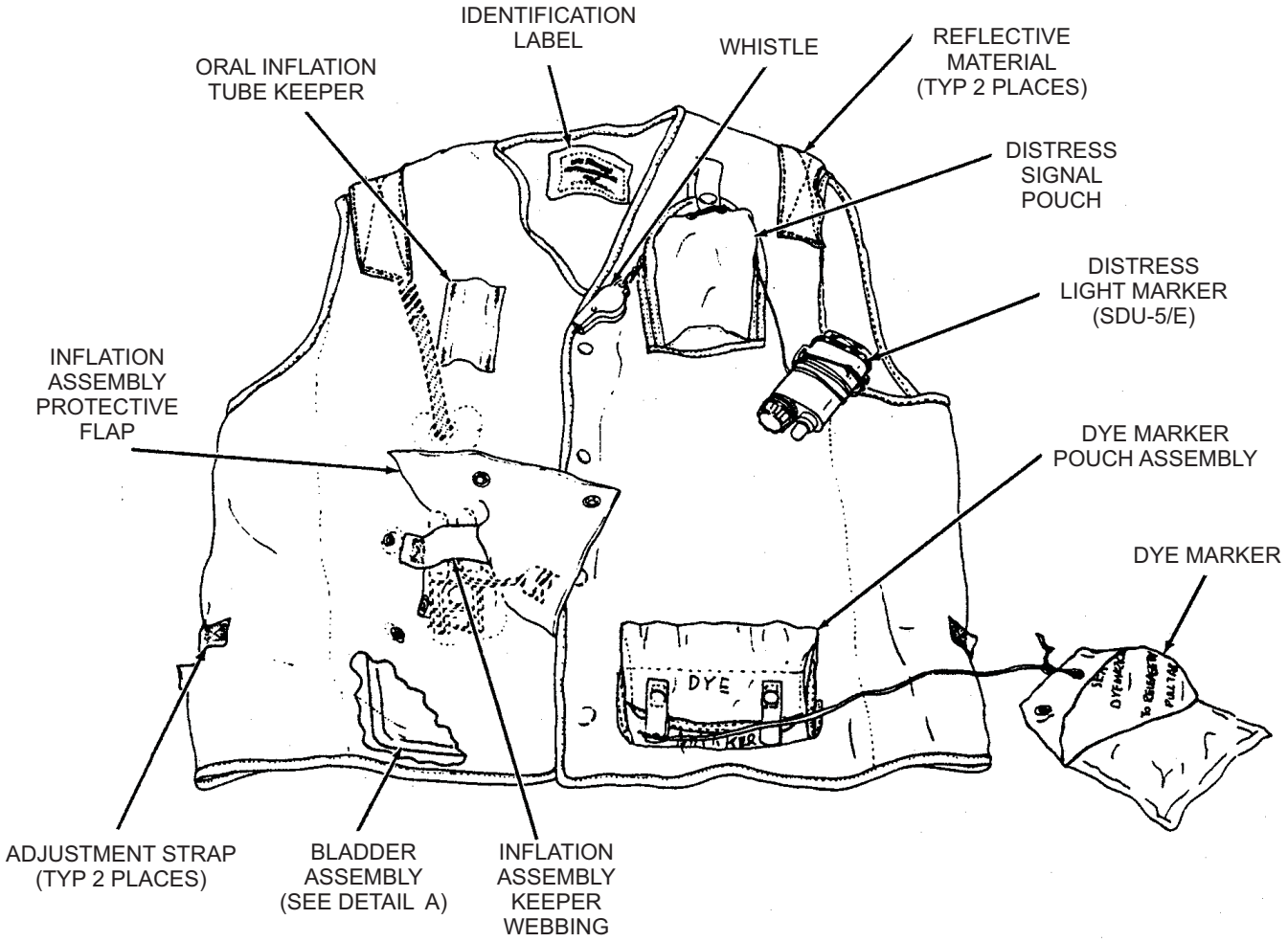

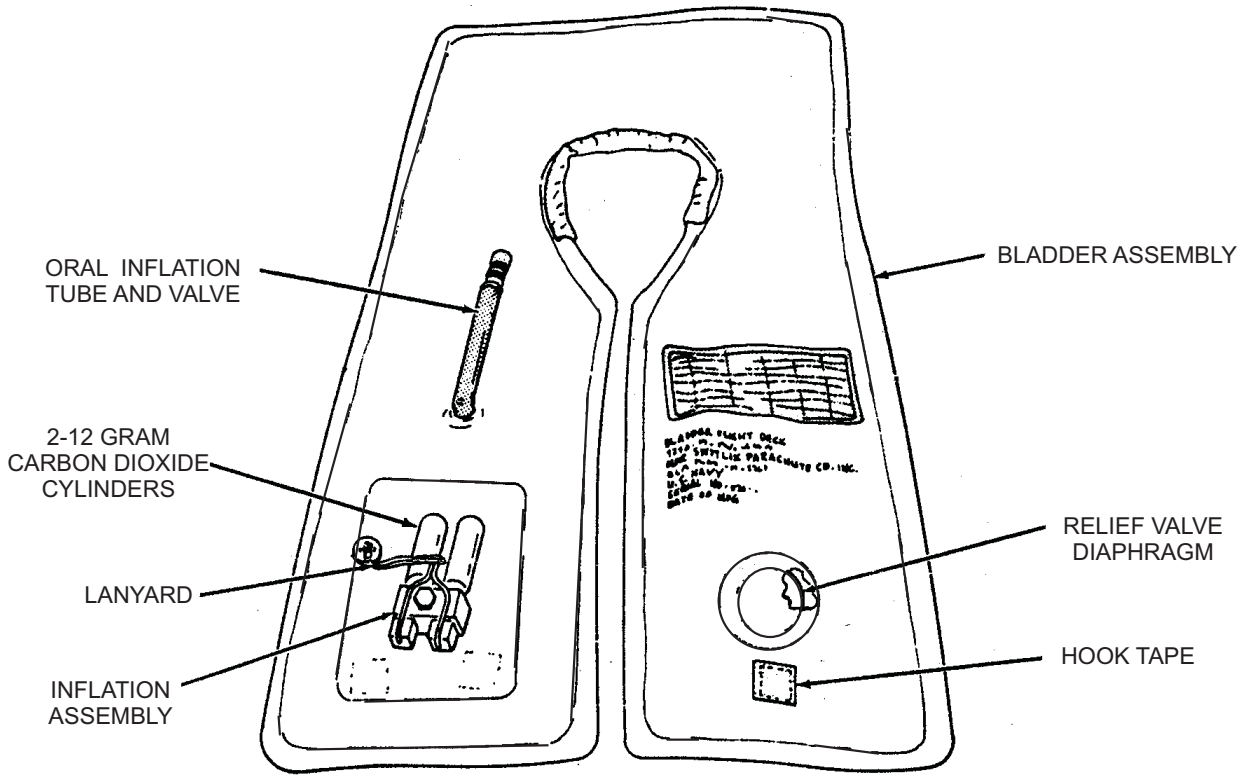

Figure 10-2.—Mk 1 inflatable life preserver.

Table 10-1.—Authorized Flight Quarters Clothing

Aircraft handling crew and chock men	Blue	Blue	Crew number
Aircraft handling officers and plane directors	Yellow	Yellow	Billet title—crew number
Arresting gear crew	Green	Green	A
Aviation fuels crew	Purple	Purple	F
Cargo handling personnel	White	Green	"SUPPLY"/"POSTAL" as appropriate
Catapult and arresting gear officers	Green	Yellow	Billet title
Catapult crew	Green	Green	C
Catapult safety observer (ICCS)	Green	(Note 4)	Billet title
Crash and salvage crews	Red	Red	Crash/Salvage
Elevator operators	White	Blue	E
Explosive ordnance disposal (EOD)	Red	Red	"EOD" in black
GSE troubleshooter	Green	Green	"GSE"
Helicopter LSE	Red	Green	H
Helicopter plane captain	Red	Brown	H
Hook runner	Green	Green	A
Landing signal officer	None	White	LSO
Leading petty officers:			
Line	Green	Brown	Squadron designator and "Line CPO"
Maintenance	Green	Green	Squadron designator plus "Maint. CPO"
Quality assurance	Brown	White	Squadron designator and "QA"
Squadron plane inspector	Green	White	Black and white checkerboard pattern and squadron designator
LOX crew	White	White	LOX
Maintenance crews	Green	Green	Black stripe and squadron designator
Medical	White	White	Red cross
Messengers and telephone talkers	White	Blue	T
Ordnance	Red	Red	3-inch black stripe and squadron designator/ships billet title
Photographers	Green	Green	P
Plane captains	Brown	Brown	Squadron designator
Safety	White	White	"SAFETY"
Supply VERTREP coordinator	White	Green	"SUPPLY COORDINATOR"
Tractor driver	Blue	Blue	Tractor
Tractor King	Blue	(Note 5)	TK
Transfer officer	White	White	"TRANSFER OFFICER"

NOTE

1. Only officers charged with the actual control or direction of aircraft movements on the flight or hanger decks shall wear yellow jerseys. Officers in charge of a detail such as aviation fuels, ordnance, and maintenance shall wear a helmet and jersey corresponding in color to that of their respective detail, with their billet title on the jersey and flotation vest.
2. Helmets for the following personnel shall be marked with three reflective international orange stripes, 1-inch wide, evenly spaced, running fore and aft:
   a. All air department officers.
   b. Air department chief petty officers and leading petty officers.
   c. EOD team members.
   d. All ordnance officers and gunners.
   e. Ordnance handling officer and air gunner.
3. Helmets for all other personnel shall be marked with a 6-inch square (or equivalent) of white reflective tape on the back shell and a 3-inch by 6-inch (or equivalent) of white reflective tape on the front shell. Landing signal officers are not required to wear helmets or sound attenuators when engaged in aircraft control.
4. New requirement for ICCS is green jersey and yellow vest.
5. Yellow jersey/blue flotation vest.

arresting gear, and crash and salvage personnel. Specific launch procedures and sequences are given, the disposition of aircraft that go down is determined, and the directors and spotters are informed about their specific part in the operation. After the briefing, directors inform their crews of the details of the launch, and the aircraft are spotted on the flight deck.

Details of the recovery are included in the next launch briefing, and crews must always be aware that the need for a ready deck could arise at any time because of an emergency situation. Since most aircraft are jets, they are catapulted. Aircraft are spotted as to type, mission, and what catapult is to be used to ensure an even, continuous flow to the catapults. Conventional (reciprocating and turboprop) aircraft can be either catapulted or deck launched. The search and rescue helicopter is normally the first aircraft launched and the last to be recovered.

Flight quarters are usually sounded 1 to 2 hours before the launch time. The flight deck becomes very active. All Air Department personnel engage in a foreign object damage (FOD) walkdown. The walkdown finds things (nuts, bolts, safety wire, and general trash) that could be sucked into an aircraft's engine or blown by exhaust that could cause serious damage or injury. Plane captains single up on aircraft tie-down chains. Arming crews load aircraft with the appropriate armament. Fueling crews check aircraft for loads. Catapult and arresting gear crews check their machinery and equipment. Plane-handling crews make last minute respots and check tow tractors and other plane-handling equipment. Crash and salvage (C/S) is manned 24 hours a day. They break out the equipment the day the vessel gets under way with aircraft aboard. The only requirement of the crash and salvage crew thereafter is to inventory and check out the gear.

Approximately 30 minutes before launch time, flight crews perform their final checks to start the engines upon the signal from primary fly control (PRI-FLY). Flight deck control coordinates ground crews to provide the aircraft with air conditioning, electrical power ,engine start high-pressure air, move or respot aircraft as required, and manage all aircraft securing equipment. Once complete, the first launch aircraft are started.

DANGER

Beware of jet blast, props, and rotors.

DIRECTING TAXIING AIRCRAFT

During flight operations, the speed with which aircraft can be launched and recovered depends largely upon the efficiency of the plane directors. When launching, aircraft must be moved out of the spotting area and positioned on a catapult or takeoff spot, often coming within inches of the flight deck or other aircraft. Under these conditions, mistakes prove costly. When an aircraft lands, it must be released from the arresting gear, moved forward, and spotted to make room for the next aircraft landing.

Three important rules for you to remember in directing taxiing aircraft are as follows:

1. **Make sure the pilot can see the signals**. The standard position for the director is slightly ahead of the aircraft and in line with the left wing tip, but the position may have to be adjusted aboard a carrier. A foolproof test is "if you can see the pilot's eyes, the pilot can see your signals."

2. **The person being signaled must know and understand the signals and use them in a precise manner**. Indistinct signals or poor execution of signals will lead to casualties.

3. **When taxiing an aircraft, you must take extreme caution to prevent personnel from being caught in the jet blast exhaust and being severely burned or blown overboard**. Other aircraft and/or support equipment could suffer a similar fate.

As the carrier turns into the wind, you must have coordination between primary flight control (PRI-FLY), which gives the catapult officer the signal to launch, flight deck control for the movement of all aircraft, and the bridge that gives permission to commence the launch.

NOTE: Primary flight control (PRI-FLY) has control for all flight deck lighting, landing spot lighting, flight deck floodlights, the stabilized glide slope indicator (SGSI), and the flight deck rotary beacon.

When the flight deck is readied (equipment, lighting, personnel, etc.) and all final checks are preformed, the proper signals and communications are given for launch by primary flight control. Then, the catapult officer launches an aircraft from the catapult, then another, giving only sufficient time for the first aircraft to clear the bow of the ship. As the catapult officer launches an aircraft, the directors move another aircraft into the launch position. The sequence of time

intervals between aircraft being launched is predetermined and reflects case 1, 2, or 3 launch. Normally, intervals are as close as 30 seconds or within a safe launch sequence. This procedure, alternating between the catapults (2, 3, or 4), is continued until all jet aircraft are airborne. Conventional aircraft may be catapulted or deck launched, depending on the operational situation. In this manner, an entire deckload of aircraft can be launched in a matter of minutes.

LANDING PROCEDURE

Landing aircraft on a carrier is one of the most dangerous operations performed. All hands not involved in landing operations are ordered to clear the flight deck, catwalks, and guntubs. Personnel whose duties require that they be in exposed places must keep alert and watch incoming aircraft so they can get clear in case of an abnormal or emergency landing.

WARNING

Personnel should not turn their backs on landing aircraft or aircraft taxiing out of the arresting gear.

Before the aircraft landing, the flight deck aft is checked by the arresting gear officer to ensure the following:

- Catapult gear is clear of the landing area.
- The shuttle is retracted and the cover is in place on the No. 3 catapult.
- Sheaves are up in the aircraft area.
- The Fresnel Lens Optical Landing System (FLOLS) is turned on, or the manually operated visual landing system (MOVLAS) is rigged in its place.
- The barricade hatch is clear, and a tractor is hooked to the stored barricade if it is needed.
- The green rotating beacon at the aft end of the island is turned on.
- The aircraft are clear of the fouled deck line.
- The arresting gear crews are manned and ready.
- The landing signal officer's (LSO) platform is manned and ready.
- The gear is set for the first aircraft. (The recovery officer then calls, "Gear manned and ready; need a green light from the PRI-FLY.")

NOTE: Aircraft carriers with an angled deck elevator also have to be checked for the following items:

1. The stanchions are all the way down.
2. The removable coamings are stored.
3. The aircraft elevators are up and in the locked position.

The ship is then turned into the wind, and the air officer switches the aft rotating beacon from red to green, giving the pilot the signal to begin landing operations.

The aircraft enters a standard traffic pattern for the landing approach. The landing signal officer (LSO) stationed portside aft on the flight deck monitors or directs the pilot in the final approach. By using various signals or radio voice communications, the LSO corrects any discrepancy in the aircraft's speed, altitude, and attitude. If the aircraft is in the proper position, the LSO gives the pilot (propeller-type aircraft) a "cut." The "cut" signal can be a hand signal, a light signal, a radio transmission, or a combination of any two of these signals. The pilot then flies the aircraft onto the deck. If, on approaching the flight deck, the aircraft is not in the proper position, the pilot is given a WAVE-OFF by the LSO. This means that the pilot must again enter the traffic pattern and make a new approach.

The Fresnel Lens Optical Landing System (FLOLS) is a major improvement in carrier aviation. This system places the major control of the aircraft in the hands of one person (the pilot) instead of two. It also gives the pilot quicker, more certain awareness of errors in his/her approach.

Using the FLOLS, the aircraft enters a standard traffic pattern for the landing approach. The FLOLS provides continuous glide path information to the pilot. Propeller-type aircraft are given a "cut" signal by light or voice radio by the LSO. The pilot must maintain correct airspeed and line up the center line of the landing area.

If the aircraft is not on the glide path or the deck is foul, the LSO flashes the WAVE-OFF light located on the FLOLS. The wave-off is mandatory, and the pilot must again enter the traffic pattern and make a new approach.

If a jet aircraft makes a good approach and the deck is clear, no signal is given by the LSO. The aircraft continues on the glide path with power on until it

contacts the deck and comes to a complete stop. If the aircraft is not arrested, it continues toward the end of the angled deck. The pilot must again enter the traffic pattern for another approach. (This is referred to as a "bolter.")

After an aircraft has engaged a cross-deck pendant (cable) and comes to a complete stop, the gear puller, a director assigned to direct aircraft from the landing area, gives the signal to either raise the hook or to pull the aircraft backwards. This allows the gear puller to have sufficient slack on the cross-deck pendant so he can safely raise the tailhook. In the event the tailhook cannot be raised, the crash and salvage crew may either free the cable or manually raise the hook. The hook runner acts as a safety check and displays the emergency hold signal directed to the arresting gear console operator.

When the aircraft is free of the cross-deck pendant, the director taxies the aircraft clear of the landing area; the deck is then readied for another landing. An alternating red and white striped line that runs the length of the flight deck, known as the *foul line* or *safe parking line*, separates this area from the rest of the deck. The fly one director then taxies the aircraft to a position so the nose of the aircraft is pointed over the side, and then stops the aircraft.

The director then ensures that the area directly in front of the aircraft is clear of personnel and of other aircraft. He/she then turns the aircraft over to the ordnance crew for disarming. He/she displays a hold signal to the pilot with one hand and points to the ordnance director with the other. Once the disarming is accomplished, the V-1 director then directs the aircraft for parking or to be spotted.

SPOTTING AIRCRAFT

Most carriers have a basic spotting order. This spotting order varies from carrier to carrier to suit the flight-deck layout. After the aircraft is spotted, chocked, and secured, the plane captain takes over from the pilot. The plane captain stays with the aircraft until it is parked in its final spot.

Certain aircraft must be spotted in a specific location to permit servicing, loading of ammunition, starting, fueling, maintenance, and so forth. For certain large aircraft, the spotting location must not interfere with the movement of other aircraft or launching or recovery operations. This process is repeated until all aircraft have landed.

After all aircraft have landed, the flight deck is respotted by the handling crews for the next launch. Tow tractors are used to move the aircraft around the flight deck when taxiing cannot be done. When the refueling, servicing, rearming, or any minor maintenance is completed, the carrier is again ready to launch aircraft. The entire procedure from launch to landing and respotting takes about 90 minutes.

EMERGENCY RECOVERY EQUIPMENT

Barricades (fig. 10-3) are that part of the emergency recovery equipment used for the emergency arrestment (stopping) of an aircraft that cannot make a normal (pendant) arrested landing. Barricades are used when aircraft have battle damage, tailhook failure, or some other mechanical failure. The barricade has expandable nylon webbing that is stretched across the flight deck between port and starboard stanchions, which include ramp plates and deck cables.

During the aircraft arrestment, when the aircraft contacts the barricade, the wings engage the nylon webbing, which transmits the arresting force to the barricade engine below deck and stops the aircraft safely.

The V-1 division works in conjunction with the V-2 division in the initial preparations of the barricade. They set down the deck plates and ensure that they are locked in place, pull out the webbing, and direct all hands in this process.

Q10-3. What division is responsible for handling aircraft on the flight deck?

Q10-4. What is the purpose of a "FOD walkdown"?

Q10-5. What is the alternating red and white striped line that runs the length of the flight deck called?

Q10-6. What is the purpose of a barricade?

AIRCRAFT HANDLING SIGNALS

LEARNING OBJECTIVE: Recognize aircraft handling signals aboard ship.

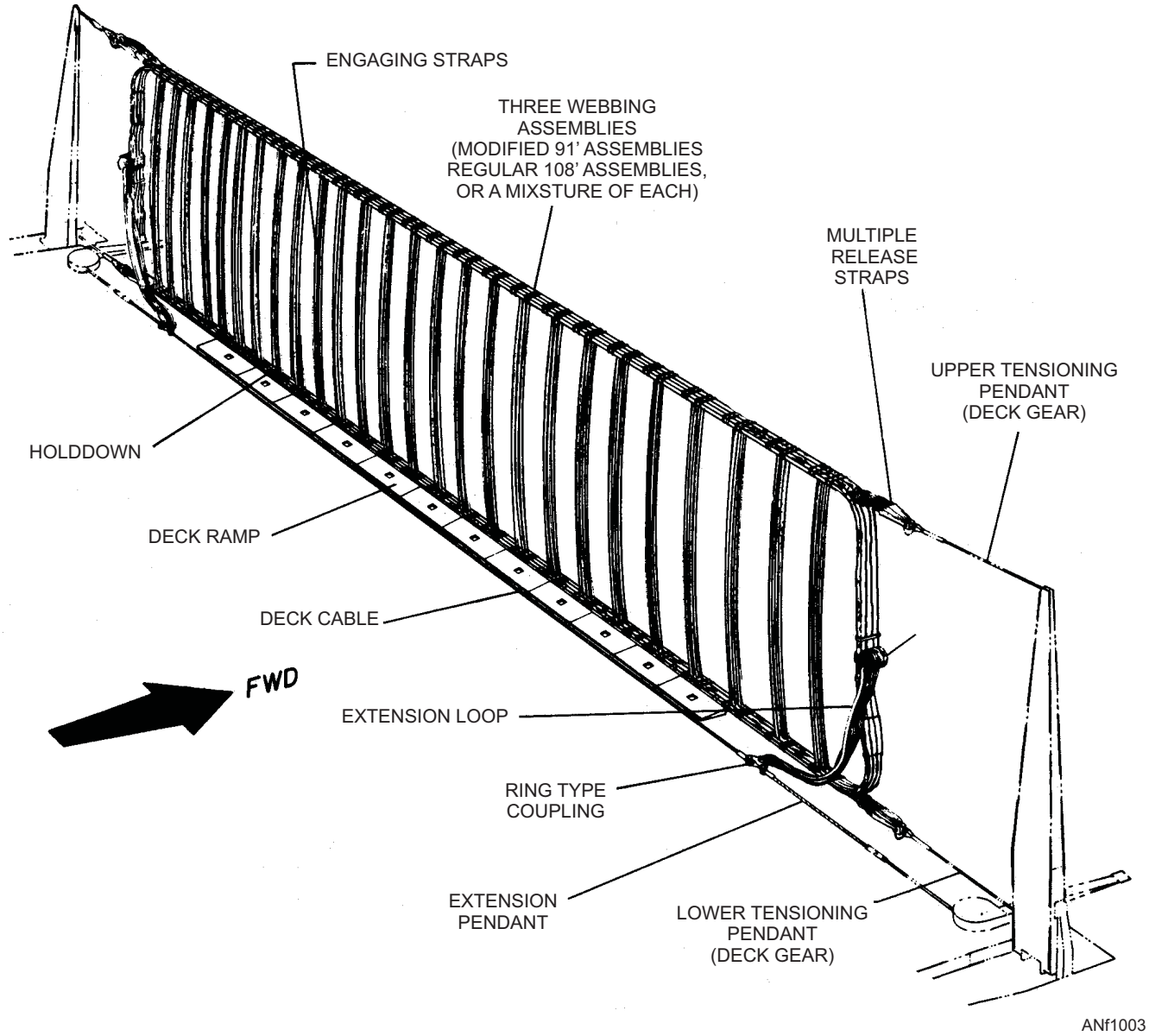

Figure 10-3.—Typical barricade in the ready position.

The aircraft-handling signals discussed in this section (fig. 10-4) are used by all aviation branches of the United States Armed Forces.

You, the beginner, must first learn (memorize) these signals thoroughly. Then, you must practice these signals to ensure precise execution. If you drop one arm to indicate application of a brake on a turn, snap the arm out briskly. If you stretch your arms out in rendering a signal, open them wide. When practical, keep the hands well separated. It is better to exaggerate a signal than to make it in such a manner that it may be misinterpreted.

NOTE: The "**emergency stop**" signal is mandatory. All other director hand signals are advisory when directing aircraft.

Aboard carriers, the "emergency stop" signal is used more frequently than on shore stations. You must remember that this signal is meant for emergencies **only**. Do not use it as a routine stop signal. It is sometimes necessary for the director to give a "come ahead slowly" signal in close quarters. The director should execute this signal by alternately giving the standard "come ahead" signal (with slow movement of the arms, followed by the stop signal).

SIGNAL	DAY	NIGHT	REMARKS
1 AFFIRMATIVE (ALL CLEAR)	Hand raised, thumb up.	Same as day signal with addition of wands.	Conforms to ICAO signal.
2 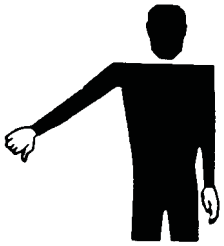 NEGATIVE (NOT CLEAR)	Arm held out, hand below waist level, thumb turned downwards.	Same as day signal with addition of wands.	
3 PROCEED TO NEXT MARSHALER	Right or left arm Down, other arm moved across the body and extended to indicate direction to next marshal.	Same as day signal with addition of wands.	Conforms to ICAO signal.
4 THIS WAY	Arms above head in vertical position with palms facing inward.	Same as day signal with addition of wands.	Conforms to ICAO signal.

ANf1004a

Figure 10-4.—General aircraft-handling signals (sheet 1).

SIGNAL	DAY	NIGHT	REMARKS
5 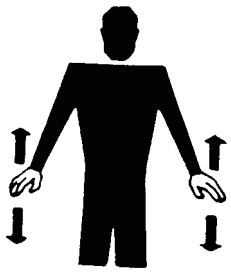 SLOW DOWN	Arms down with palms towards ground, then moved up and down several times.	Same as day signal with addition of wands.	Conforms to ICAO signal.
6 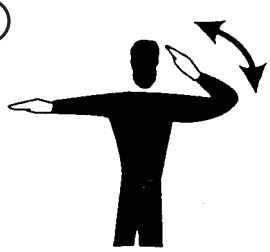 TURN TO LEFT	Extend right arm horizontally, left arm is repeatedly moved upward. Speed of arm movement indicating rate of turn.	Same as day signal with addition of wands	1. Clench fist (day), or down-turned wand (night), means for pilot to lock indicated brake. 2. Also used for spot turns airborne aircraft. Conforms to ICAO signal.
7 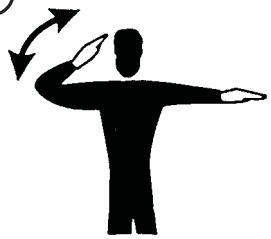 TURN TO RIGHT	Extend left arm horizontally, right arm is repeatedly moved upward. Speed of arm movement indicating rate of turn.	Same as day signal with addition of wands	1. Clench fist (day), or down-turned wand (night), means for pilot to lock indicated brake. 2. Also used for spot turns airborne aircraft. Conforms to ICAO signal.
8 MOVE AHEAD	Arm extended from body and held horizontal to shoulders with hands up-raised and above eye level, palms facing backwards. Execute beckoning arm motion angled backward. Rapidity indicates speed desired of aircraft.	Same as day signal with addition of wands	

ANf1004b

Figure 10-4.—General aircraft-handling signals (sheet 2).

SIGNAL	DAY	NIGHT	REMARKS
9 STOP	Arms crossed above the head, palms facing forward.	Same as day signal with addition of wands.	
10 BRAKES	ON - Arms above head, open palms and fingers raised with palms toward aircraft, then fist closed. OFF - Reverse of above.	ON - Arms above head, then wands crossed. OFF - Crossed wands, then uncrossed.	
11 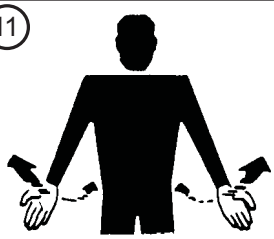 MOVE BACK (ALSO USED TO PULL BACK AIRCRAFT UTILIZING ARRESTING WIRE)	Arms by sides, palms facing forward, swept forward and upward repeatedly to shoulder height.	Same as day signal with addition of wands.	Conforms to ICAO signal.
12 TURNS WHILE BACKING (TAIL TO LEFT)	Point right arm down and left arm brought from overhead, vertical position to horizontal position repeating left arm movement.	Same as day signal with addition of wands	Conforms to ICAO signal.

ANf1004c

Figure 10-4.—General aircraft-handling signals (sheet 3).

SIGNAL	DAY	NIGHT	REMARKS
13 TURNS WHILE BACKING (TAIL TO RIGHT)	Point left arm down and right arm brought from overhead, vertical position to horizontal forward position, repeating right arm movement.	Same as day signal with addition of wands.	Conforms to ICAO signal.
14 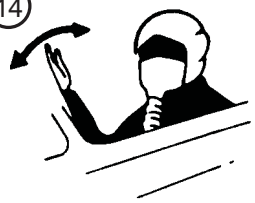 CLEARANCE FOR PERSONNEL TO APPROACH AIRCRAFT	A beckoning motion with right hand at eye level.		
15 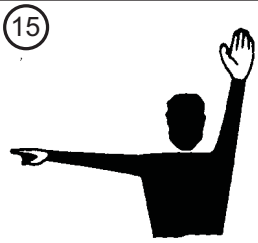 PERSONNEL APPROACHING THE AIRCRAFT	Left hand raised vertically overhead, palm towards aircraft. The other hand indicates to personnel concerned and gestures towards aircraft.	Same as day signal with addition of wands.	
16 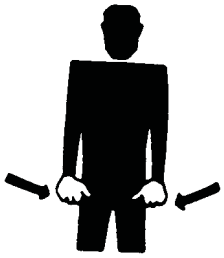 INSERT CHOCKS	Arms down, fists closed, thumbs extended inwards, swing arms from extended position inwards.	Same as day signal with addition of wands.	Conforms to ICAO signal.

ANf1004d

Figure 10-4.—General aircraft-handling signals (sheet 4).

SIGNAL	DAY	NIGHT	REMARKS
17 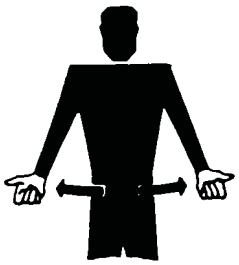 REMOVE CHOCKS	Arms down, fists closed, thumbs extended outwards, swing arms outwards.	Same as day signal with addition of wands.	Conforms to ICAO signal.
18 INSTALL DOWN LOCKS/ UNDERCARRIAGE PINS	With arms above head, the right hand clasps left forearm and the left fist is clenched.	Similar to the day signal except the right wand is placed against left forearm. The wand in the left hand is held vertical.	
19 REMOVE DOWN LOCKS/ UNDERCARRIAGE PINS	With arms and hands in “install down locks” position, the right hand unclasps the left forearm.	Similar to the day signal except with the addition of wands.	
20 CONNECT GROUND ELECTRICAL POWER SUPPLY	Hands above head, left fist partially clenched, right hand moved in direction of left hand with first two fingers extended and inserted into circle made by fingers of the left hand.	Same as day signal with addition of wands.	Same signal for air start unit except using two fingers (day).

ANf1004e

Figure 10-4.—General aircraft-handling signals (sheet 5).

SIGNAL	DAY	NIGHT	REMARKS
21 DISCONNECT GROUND ELECTRIC POWER SUPPLY	Hands above head, left fist partially clenched, right hand moved away from the left hand, withdrawing first two fingers from circle made by fingers of the left hand.	Same as day signal with addition of wands.	Same signal for air start unit except using two fingers (day).
22 START ENGINE(S)	Left hand overhead with appropriate number of fingers extended, to indicate the number of the engine to be started, and circular motion of right hand at head level.	Similar to the day signal except that the wand in the left hand will be flashed to indicate the engine to be started.	Conforms to ICAO signal.
23 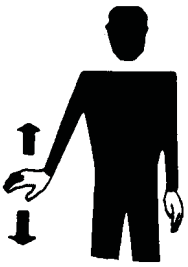 SLOW DOWN ENGINE(S) ON INDICATED SIDE	Arms down with palms toward ground, then either right or left arm waved up and down indicating that left or right side engines respectively should be slowed down.	Same as day signal with addition of wands.	Conforms to ICAO signal.
24 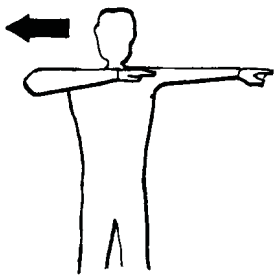 CUT ENGINE(S)	Either arm and hand level with shoulder, hand moving across the throat, palm down. Hand is moved sideways, arm remaining bent. Other arm pointing to engine.	Same as day signal with addition of wands.	

ANf1004f

Figure 10-4.—General aircraft-handling signals (sheet 6).

SIGNAL	DAY	NIGHT	REMARKS
25 LOCK TAIL WHEEL	Hands together overhead, opened from the wrists in a V , then closed suddenly.	Same as day signal with addition of wands.	
26 UNLOCK TAIL WHEEL	Hands overhead, palms together, then hands opened from the wrists to for a V, wrists remaining together.	Same as day signal with addition of wands.	
27 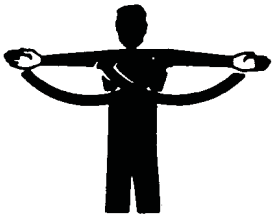 FOLD WINGS/ HELICOPTER BLADES	Arms straight out at sides, then swept forward and hugged around shoulders.	Same as day signal with addition of wands	
28 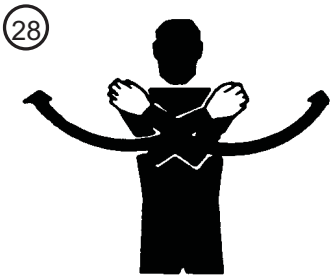 SPREAD WINGS/ HELICOPTER BLADES	Arms hugged around shoulders, the swept straight out to the sides.	Same as day signal with addition of wands	

ANf1004g

Figure 10-4.—General aircraft-handling signals (sheet 7).

SIGNAL	DAY	NIGHT	REMARKS
29 LOCK WINGS/ HELICOPTER BLADES	Hit right elbow with palm of left hand.	Same as day signal with addition of wands.	
30 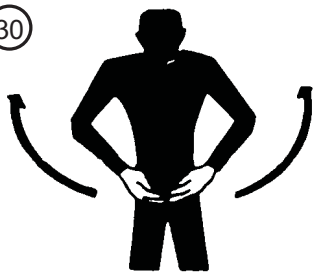 OPEN WEAPONS BAY(S) DOOR(S)	Body bent forward at the waist, hands held with fingertips touching in front of body and elbows bent at approximately 45º, then arms swing downward and outward.	Same as day signal with addition of wands.	
31 CLOSE WEAPON BAY(S) DOOR(S)	Body bent forward at the waist and arms extended horizontally, then arms swing downward and in until fingertips touch in front of the body with elbows bent at approximately 45º .	Same as day signal with addition of wands	
32 TAKE OFF	Director conceals left hand and makes circular motion of right hand over head in horizontal plane ending in a throwing motion of arm towards direction of takeoff.	Same as day signal with addition of wands	

ANf1004h

Figure 10-4.—General aircraft-handling signals (sheet 8).

SIGNAL	DAY	NIGHT	REMARKS
33 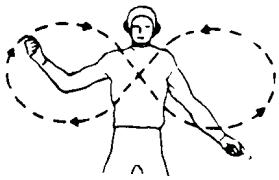 FIRE	Describes large figure eight with one hand and point to the fire area with the other hand.	Same, except with wands.	Signal is meant for information only. Pilot should be given a cut engine or continuous turnup signal, as appropriate.
34 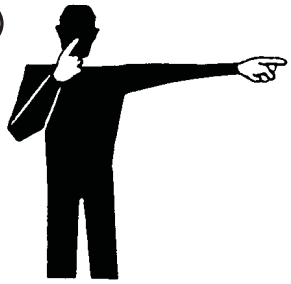 ENGAGE NOSEGEAR STEERING	Point to nose with index finger while indicating direction of turn with other index finger.	Same as day signal with addition of wands.	
35 DISENGAGE NOSEGEAR STEERING	Point to nose with index finger, lateral wave with open palm of other hand at shoulder height.	Same as day signal with addition of wands.	
36 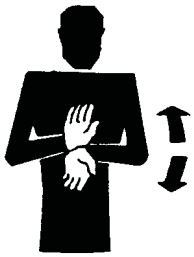 LOWER WING FLAPS	Hands in front, palms together horizontally then opened from the wrist crocodile-mouth fashion.	Same as day signal with addition of wands.	

ANf1004i

Figure 10-4.—General aircraft-handling signals (sheet 9).

SIGNAL	DAY	NIGHT	REMARKS
37 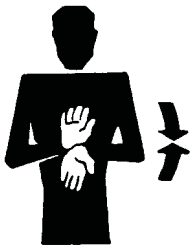 RAISE WING FLAPS	Hands in front vertically, with palms open from the wrists, then suddenly closed.	Same as day signal with addition of wands.	
38 DOWN HOOK	Right fist , thumb extended downward, lowered suddenly to meet horizontal palm of left hand.	Same as day signal with addition of wands.	
39 UP HOOK	Right fist , thumb extended upward, raised suddenly to meet horizontal palm of left hand.	Same as day signal with addition of wands.	
40 OPEN AIR BRAKES	Hands in front, palms together horizontally. Then opened from the wrists crocodile-mouth fashion.	Same as day signal with addition of wands.	

ANf1004j

Figure 10-4.—General aircraft-handling signals (sheet 10).

SIGNAL	DAY	NIGHT	REMARKS
41 CLOSE AIR BRAKES	Hands in front horizontally, with palms open from the wrists, then suddenly closed.	Same as day signal with addition of wands.	
42 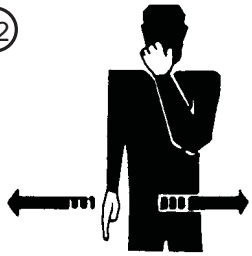 TILLER BAR/STEERING ARM IN PLACE	Hold nose with left hand, right hand moving horizontally at waist level. a. Affirmative signal immediately following means: MAN IS TENDING BAR. b. A negative signal immediately following means: NO ONE TENDING BAR.	Same as day signal with addition of wands.	
43 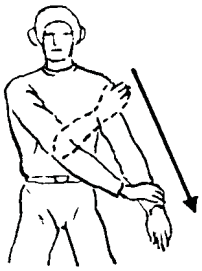 REMOVE TIEDOWNS (director)	To tiedown crew: Makes wiping motion down left arm with right hand.	Same as day signal with addition of wands.	
44 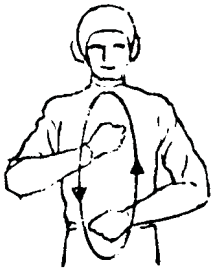 INSTALL TIEDOWNS (director)	To tiedown crew: Rotates hands in a circle perpendicular to and in front of his body.	Same as day signal with addition of wands.	

ANf1004k

Figure 10-4.—General aircraft-handling signals (sheet 11).

SIGNAL	DAY	NIGHT	REMARKS
45 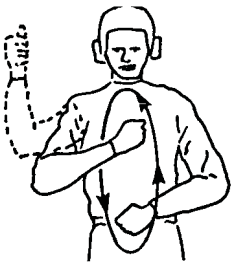 TIEDOWNS IN PLACE (director)	Same signal as “install tiedown,” followed by thumbs up.	Same as day except with wands.	
46 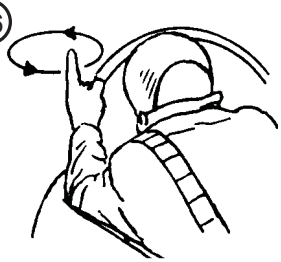 ENGINE RUNUP (pilot)	Moves forefinger in a circular motion in view of director to indicate that he is ready to run up engines.	Makes circular motion with hand held light.	Director responds with same signal (wand at night) to indicate “clear to run up.”
47 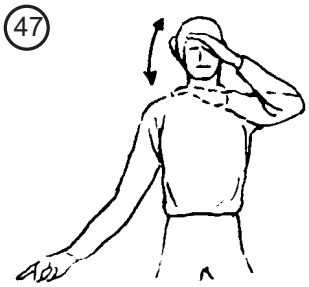 HOT BRAKES	Makes rapid fanning motion with one hand in front of face and points to wheel with other hand.	Same as day except with wands.	
48 BRAKE FAILURE (tail-hook equiped aircraft) (pilot)	Pilot drops tailhook and turns on external lights as an emergency signal to the director and deck crew.	Same as day.	Pilot also informs tower via radio.

ANf1004l

Figure 10-4.—General aircraft-handling signals (sheet 12).

SIGNAL	DAY	NIGHT	REMARKS
49 LIGHTS	Points to eyes with two fingers to signal “lights on.”	Flashing wands.	When lights are already on, same signal is used to signal “lights off.”
50 I HAVE COMMAND	Hold one hand open, motionless and high above head, with palm forward.	Same as day except with wands.	
51 OPEN COWL FLAPS	Hold hands against side of head; then open hands by moving thumbs forward and outward.	Same as day except with wands.	
52 CONNECT/DISCONNECT AIR STARTING UNIT			Same as connect/ disconnect ground “electrical power supply.” except using one finger (day). (See signals 20 and 21.)

ANf1004m

Figure 10-4.—General aircraft-handling signals (sheet 13).

SIGNAL	DAY	NIGHT	REMARKS
53 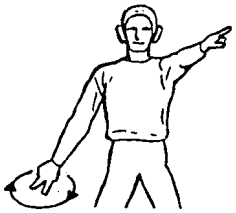 START AIRCRAFT AUXILIARY POWER UNIT	Points to power unit exhaust with left hand index finger; moves right hand in horizontal circle, index and middle finger pointing downward.	Same as day except with wands.	
54 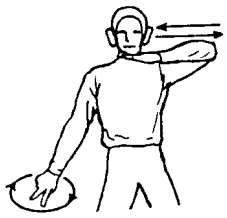 STOP AIRCRAFT AUXILIARY POWER UNIT	Makes “throat cutting” action with left hand; moves right hand in horizontal circle, index and middle fingers pointing downward.	Same as day except with wands.	
55 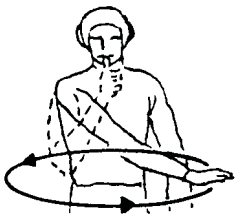 GROUND REFUELING ALL TANKS, NO EXTERNAL POWER (ground crewman)	Extends arm in front of body and makes a wide circular wiping motion; then brings thumb to mouth as if drinking from a glass.	Same except with wand held vertically.	Pilot extends air refueling probe and sets switches for fueling all tanks.
56 GROUND REFUELING, INTERNAL TANKS ONLY, NO EXTERNAL POWER (ground crewman)	Makes a circular motion as if rubbing stomach with palm of hand; then brings thumb to mouth as if drinking from a glass.	Same as day except with wands.	Pilot extends air refueling probe and sets switches for fueling internal tanks only.

ANf1004n

Figure 10-4.—General aircraft-handling signals (sheet 14).

SIGNAL	DAY	NIGHT	REMARKS
57 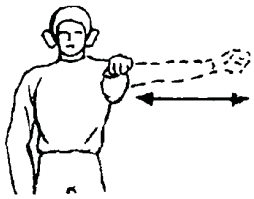 EXTEND/RETRACT AIR REFUELING PROBE OR RAM AIR TURBINE	TO EXTEND: Extend arm straight ahead, fist clenched; swing arm 90º to side. Use left or right arm according to location of probe. TO RETRACT: Use the reverse of the EXTEND signal	Same as day except with wand.	Pilot actuates probe on signal.
58 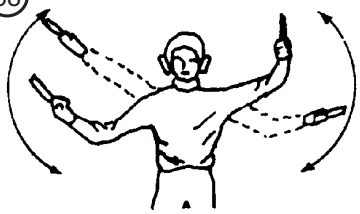 NEED AIRCRAFT STARTING UNIT	Extend arms out from body (curved upwards) and rotate arms in a clockwise/ counterclockwise motion.	Same as day except with wands.	
59 FUEL DISCHARGE DURING START	Left arm raised above shoulder with number of fingers extended to indicate affected engine; right hand describes a pendulum motion between waist and knees.	Similar to day signal except that wand in left hand will be flashed to indicate the number of the affected engine.	Signal is for information only; pilot should be given cut engine or continuous turnup signal, as appropriate.
60 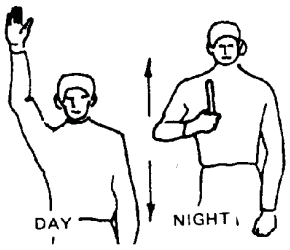 AIR WATER INJECTION (AV-8)	Give FINAL TURNUP signal. Chapter 4 (No. 9). Wait 2 or 3 seconds while pilot turns up military rated thrust and checks instruments. Then, hold open hand toward pilot, fingers extended vertically.	Same except hold GREEN wand vertically and move up and down.	Day - Pilot acknowledges by salute. Night - Pilot acknowledges by turning on light to steady dim.

ANf1004o

Figure 10-4.—General aircraft-handling signals (sheet 15).

SIGNAL	DAY	NIGHT	REMARKS
61 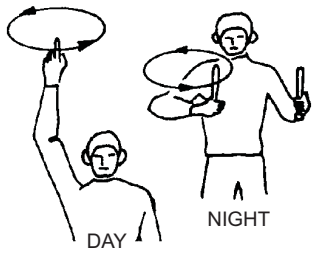 ENGINE THRUST CHECK (AV-8)	Extend arm overhead, forefinger pointing up. Hesitate, then rotate hand rapidly in a horizontal circle.	Hold RED and GREEN wands at chest level, rotating the green wand in a horizontal circle.	Signal is optional, given at request of pilot. Also can be used for deck launch.
62 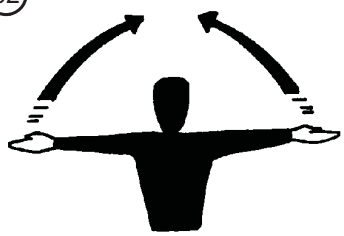 VTO (AV-8)	Arms extended horizontally sideways beckoning upwards, with palms turned up.	Same as day signal with addition of wands.	
63 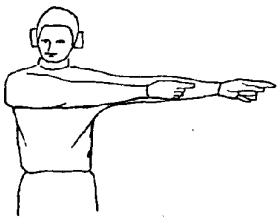 PASS CONTROL	With both arms shoulder height, point in direction of person receiving control.	Same as day except point amber wand.	Used by U.S. Navy personnel. Not a NATO signal.
64 COD RAMP: OPEN/CLOSE	One hand held in hold, the other finger and thumb extended but not touching; then bring fingers and thumb together several times. Pilot will respond with same signal.	Two wands used in same manner.	Ramps shall not come down until deck crew acknowledges pilot signal.

ANf1004p

Figure 10-4.—General aircraft-handling signals (sheet 16).

During night operations, the plane director uses two lighted taxi guidance wands (fig. 10-5) in giving handling signals.

During night flight operations, only the prescribed signal wands may be used, and then only by authorized personnel. The wands are different colors and/or shapes for the personnel designated to use them. The different colors and/or shapes of the cones on the wands are a safety factor. The colors/shapes prevent personnel from misinterpreting a signal that could cause damage to the aircraft or injury to personnel. Table 10-2 lists the personnel authorized to use wands by wand color, the number of wands, and the type. Other personnel that are involved in night flight operations must use a standard flashlight with a red filter.

Wands are used at night in the same way that hands are used for day signaling. Night signals that differ from day signals are also shown in figure 10-4.

In operations requiring taxiing of aircraft, directors are usually stationed at intervals of 50 to 100 feet along the flight deck. The director must be in a position that will give the pilot an unobstructed view of the signals. The usual stance of an experienced director ready to take over control of an aircraft is with one arm high overhead and palm inward. This not only aids the pilot in recognizing the director, but it also puts the director in a position to render practically any taxi signal with a minimum of movement. The director retains control of the aircraft only while it is in his control area. He then passes control to the next director in line on the deck. For more information on aircraft hand signals refer to NAVAIR-00-80T-113, *Aircraft Signals NATOPS Manual*.

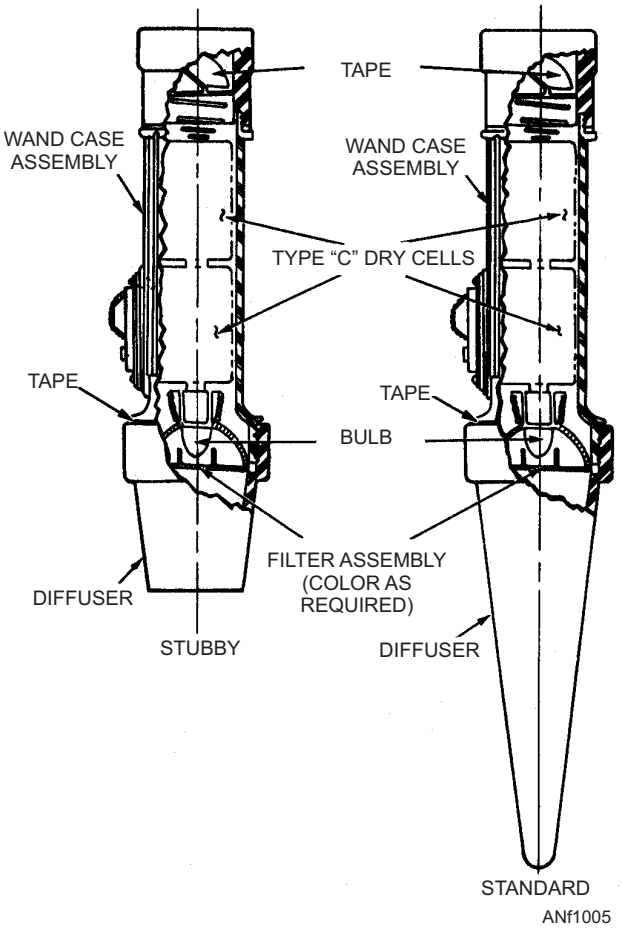

Figure 10-5.—Taxi guidance wand.

Q10-7. What hand signal is mandatory when directing fixed-wing aircraft?

Q10-8. When taxiing aircraft, directors are usually stationed at what intervals of distance along the flight deck?

SECURING AIRCRAFT ABOARD CARRIERS

LEARNING OBJECTIVE: Recognize the importance of securing aircraft and support equipment, the weather conditions that affect securing arrangements, and the aircraft handling accessories required.

In general, securing aircraft and mobile support equipment is relative on all naval aviation ships. CV/(N) carriers embark mostly fixed-wing jet, turboprop, and helicopter aircraft. LHD, LHA, LPH, and LPD class amphibious assault ships embark vertical short takeoff and landing (V/STOL) aircraft, such as the V-22 *Osprey*, AV-8 *Harrier*, and a variety of helicopters. This section does not differentiate between the different types of ships.

The importance of properly securing and handling aircraft and mobile support equipment (SE) aboard carriers cannot be overstressed. It is of the utmost importance that they are secured in a manner that prevents fore and aft and athwartship (side to side) movement. The reasons for this are threefold:

1. The pitch and roll of the ship, caused by heavy seas.

2. The list of the ship, caused by maneuvering, particularly when making high-speed turns.

3. Aircraft are parked on the flight and hangar decks with a minimum of clearance between them.

Adjustable chock assemblies are used to block the main landing gear of all aircraft and wheels on support equipment. The chocks should be in position at all times when the aircraft is not being moved and support

Table 10-2.—Taxi Signal Wand Identification

PERSONNEL	COLOR	NO	TYPE*
Aviation Fuels Checker	Amber	1	Stubby
Catapult Hookup Petty Officer	White	1	Stubby
Catapult Safety Observer (ICCS)	Red	1	Standard
	Green	1	Standard
Flight Deck Officer and Aircraft Directors	Amber	2	Standard
Hook Runner	Red	1	Stubby
Launching and Arresting Gear Officer/Helicopter LSE/LSO	Red	1	Standard
	Green	1	Standard
Ordnance Arming Crew	Red	1	Stubby Banded**
Ordnance Arming/Safety Supervisor	Red	2	Standard Banded***
Plane Captain	Blue	2	Standard
Squadron Aircraft Inspector	Blue	1	Stubby

* Standard and stubby denote cone shape. Standard denotes full length cones; stubby is a modified cone providing 3 inches of lighted cone. Any suitable battery and switch housing is authorized if cone is brightly lighted. All signal wands/flashlights must be equipped with heat-shrinkable sleeving to prevent possible cone separation.

** One 3/4 inch band on the cone (plastic electrician's tape is recommended).

*** Two 3/4 inch bands spaced equidistant on the cone (plastic electrician's tape is recommended).

equipment is not being driven. They should be removed only upon command from a plane director. Both ends of the chock should be snugly against the wheel with the adjustable end toward the rear of the plane. This ensures easy removal when engines are turning up and the wheel is set hard against the forward end of the chock.

NOTE: You should exercise caution when using wheel chocks. If aircraft chocks are not loosened during fueling operations, they will be close to impossible to remove after the aircraft is fueled because of the added weight. The opposite occurs when the aircraft is defueled; chocks must then be tightened.

Fittings are provided on all aircraft for attaching tie-downs. These fittings are usually located on each of the landing gear struts. On some aircraft additional fittings may be found on the fuselage. In all circumstances, tie-down chains are attached to each of these points when the aircraft is being secured.

Tie-down assemblies are used to secure aircraft and support equipment aboard carriers. These assemblies are equipped with attachments for deck fittings (pad eye). Deck fittings are provided on both the flight and hangar decks for securing aircraft. Methods of securing aircraft or support equipment and the quantity of tie-down assemblies will vary, depending upon the type of aircraft, equipment, scheduled operations, and weather conditions.

NORMAL WEATHER CONDITIONS

In general, the following procedures apply when securing aircraft under normal conditions:

1. Plane captains of landing aircraft stand by with tie-downs on the flight deck in a designated area. They join their aircraft as they are being parked. If an aircraft is moved to the hangar bay below, its plane captain should board the elevator with it if he can do so safely.

2. Aircraft-handling crews stand by in a designated area during recoveries and act as chockmen while aircraft are being taxied and parked. They put on the initial tie-downs and are assisted by the plane captain when possible.

3. When the aircraft reaches the final spot, the director will signal the pilot of the aircraft to lower its tailhook. This automatically straightens the nosewheel

to center. Some aircraft must have the nosewheel aligned to center manually.

4. The plane captain connects the ground wire and installs wing fold jury struts, parking harness and batten boards, engine and cockpit covers, and tie-downs needed other than the initial tie-downs put on by the aircraft-handling crews.

Detailed procedures for securing a specific aircraft are found in the maintenance instruction manual (MIM) for that aircraft.

HEAVY WEATHER PROCEDURES

The procedure for securing aircraft during heavy weather differs very little from that used in normal weather. The main difference is that more tie-downs are used. All flight control surfaces are secured with battens, and controls inside the aircraft are secured. Figure 10-6 shows the heavy weather tie-down arrangement for an aircraft.

When extremely heavy weather is anticipated, as many aircraft as possible are spotted on the hangar deck. The remainder are spotted in the fly 2 (center) and fly 3 (aft) areas of the flight deck. Avoid securing aircraft athwartship and in the heavy weather spot. Aircraft remaining on the flight deck should be spotted inboard along either side of the center line of the deck. Leave a clear area around the perimeter of the flight deck. If possible, spread the wings on the aircraft that are spotted on the flight deck. For special instructions on securing an individual aircraft, refer to the aircraft's specific maintenance manual.

When the ship is not at flight quarters or during heavy weather conditions, the Air Department is required to maintain a security/integrity watch on the flight deck and hangar deck to ensure that each aircraft remains properly secured. The watch must be especially alert for loose or broken jury struts, tie-downs, battens, chocks, engine intake/exhaust and canopy covers, any leakage, or hazardous conditions. Extreme caution is necessary when you handle aircraft in heavy weather.

COLD WEATHER PROCEDURES

Handling aircraft during cold weather operations is extremely difficult. Keep as many aircraft on the hangar deck as is possible during extremely cold weather. Keep the flight deck clear of ice and snow.

The following methods, gear, and equipment for snow and ice removal are often used:

1. Mobile equipment removal—some aircraft tow tractors may be fitted with snowplow blades or with rattan or wire rotary brushes.

2. Manual removal—conventional methods include brooms, crowbars, shovels, wooden mallets,

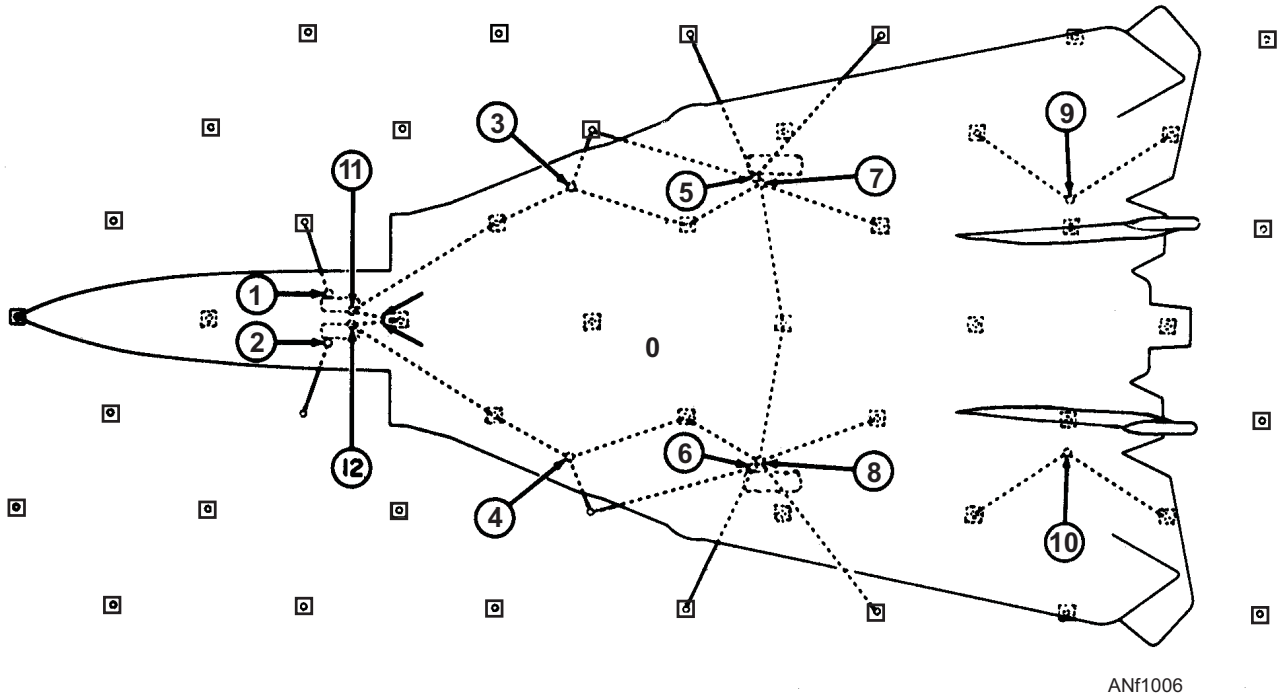

Figure 10-6.—Heavy weather aircraft tie-down.

and scrapers. Use compressed air to blow snow from pockets. Use firemain water at 100 psi and steam lances for undercutting ice. Use deck scrapers and auxiliary hot-air heaters to clear flight-deck equipment, such as wires, sheaves, arresting gear, and elevators, of ice.

Use normal deck procedures in cold weather, but considerably more time is required because of the excessive hazards involved. Use battens on control surfaces. Jury struts and cockpit covers are recommended. Tie-down the controls inside the aircraft to eliminate the chance of movement of outer control surfaces. Aircraft on ice or snow should always be moved slowly. Avoid using the brakes as much as possible when turning aircraft.

CAUTION

In severe cold weather environments, do not lock the canopies of aircraft parked in the landing area. Canopies will freeze "closed" and prevent brake rider protection.

AIRCRAFT-HANDLING ACCESSORIES

In addition to self-powered equipment, several important handling accessories are required for safe and efficient handling of aircraft. These accessories are discussed in the following text.

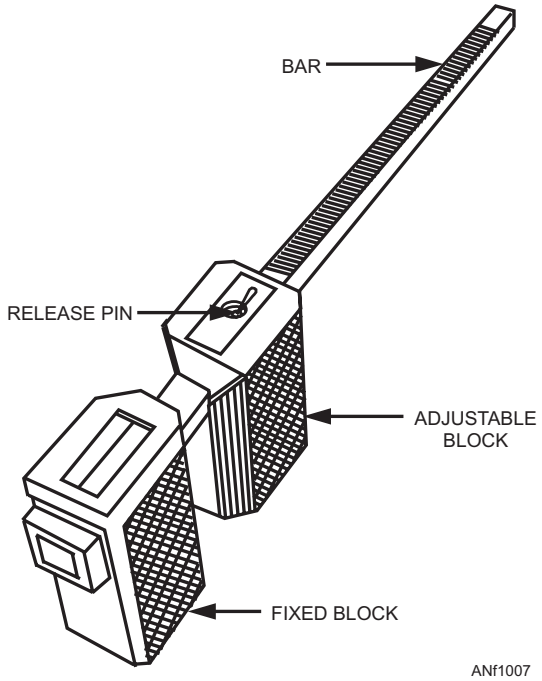

Figure 10-7.—NWC-4/5 universal wheel chock.

Aircraft Wheel Chocks

Several types of aircraft wheel chocks are used by the Navy. Of these, the NWC-4/NWC-5 polyurethane universal wheel chock (fig. 10-7) is the most common, particularly aboard aircraft carriers. On shore stations you will find two polyurethane or wooden blocks joined by nylon or manila line with different lengths to accommodate different aircraft wheels sizes. Fig. 10-8 shows a wheel chock installed.

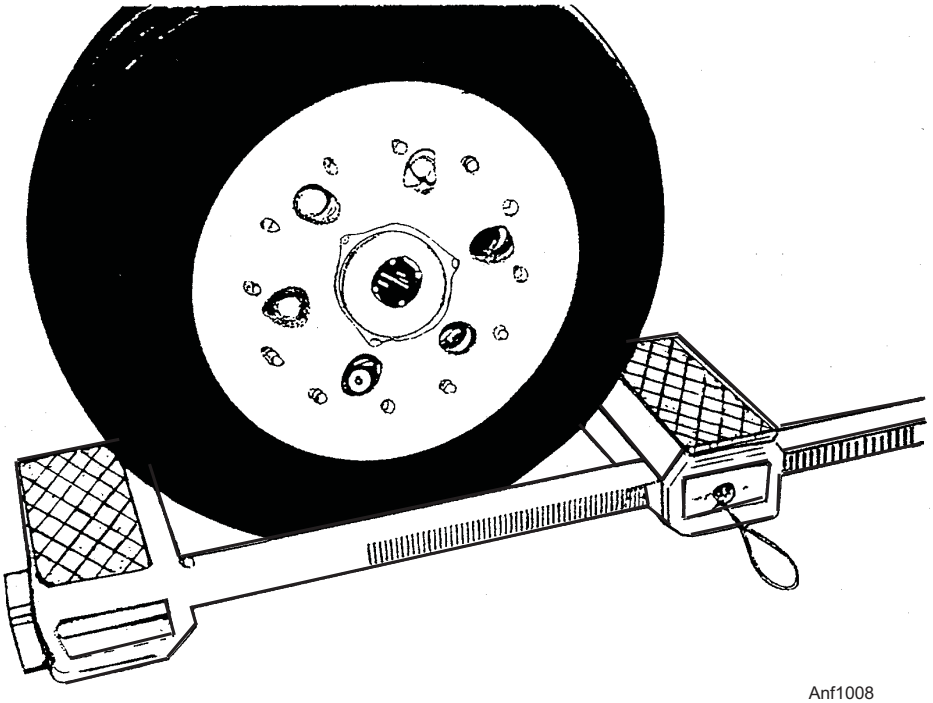

Figure 10-8.—NWC-4/5 universal wheel chock installed.

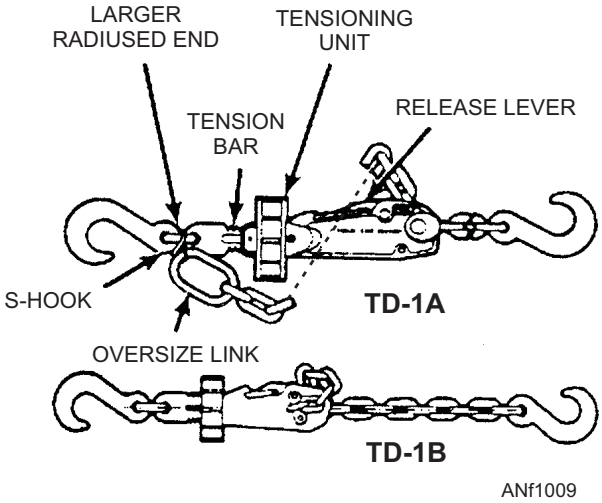

Figure 10-9.—TD-1A and TD-1B chain-type tie-down assemblies.

TD-1A and TD-1B Tie-Down Assemblies

The quick-release TD-1A and TD-1B tie-down chain assemblies (fig. 10-9) are now used almost exclusively aboard ship and ashore. These assemblies consist of a locking and release mechanism, tension bar, adjustable tension nut, and a chain, each with a hook at one end. Figure 10-10 shows a close-up of the proper installation. Both assemblies are available in two different lengths, 9 foot and 14 foot, and are fully adjustable from a foot and a half to full extension.

A/B Tie-Down Assembly

This tie-down is called the (Aero) full-power tie-down assembly (fig. 10-11). It is commonly called

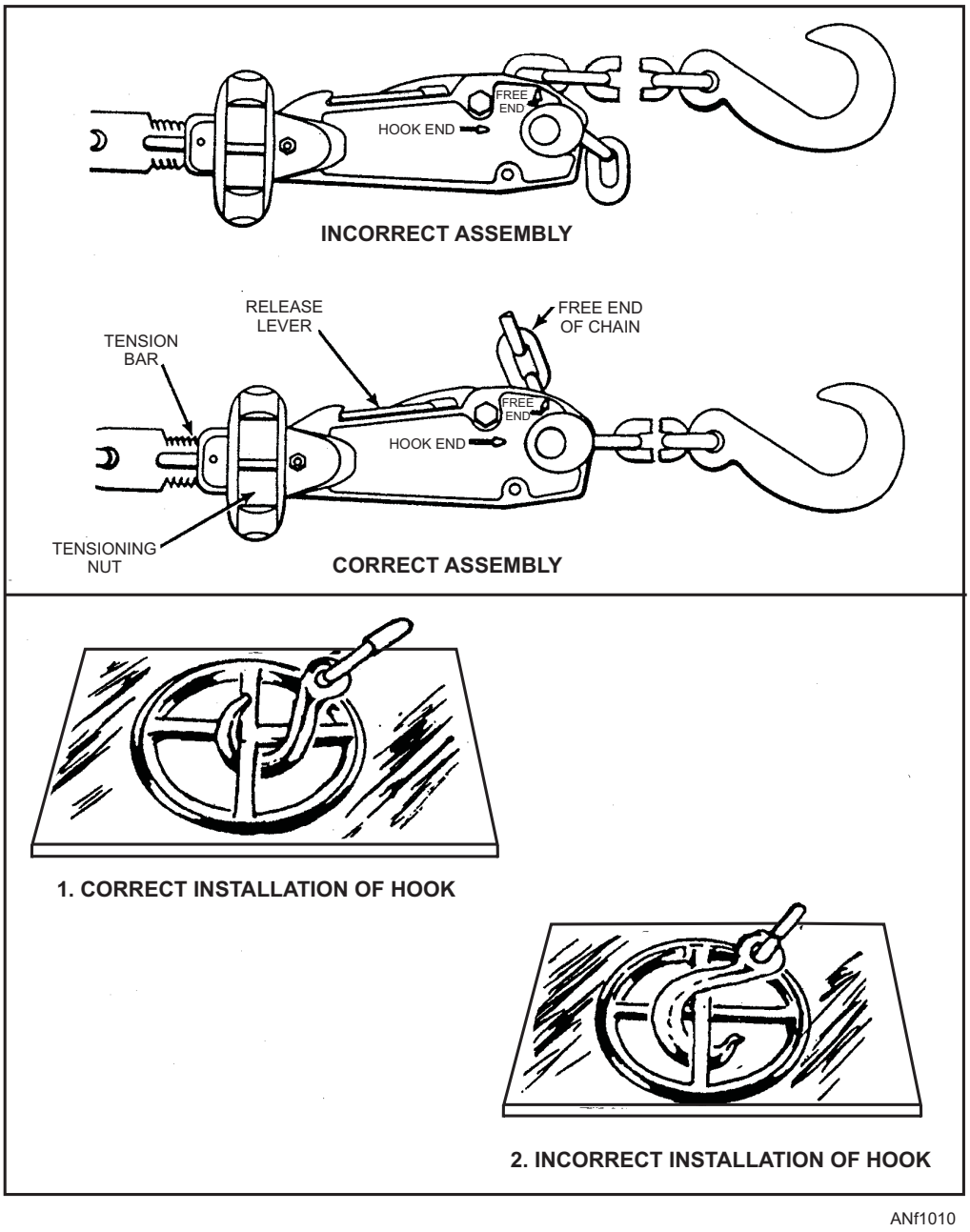

Figure 10-10.—Close-up showing proper installation of the TD-1A assembly.

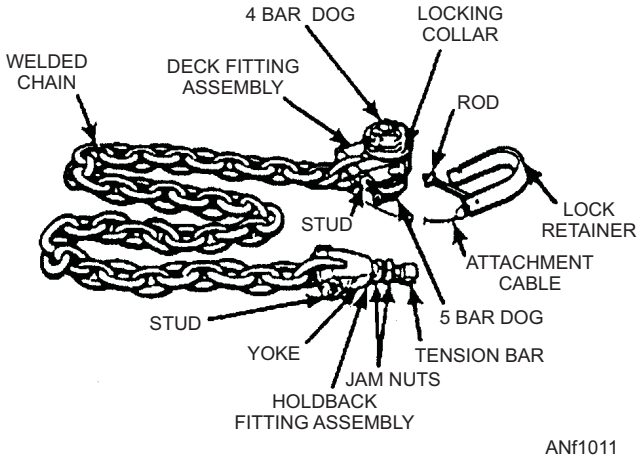

Figure 10-11.—Aero full power tie-down assembly.

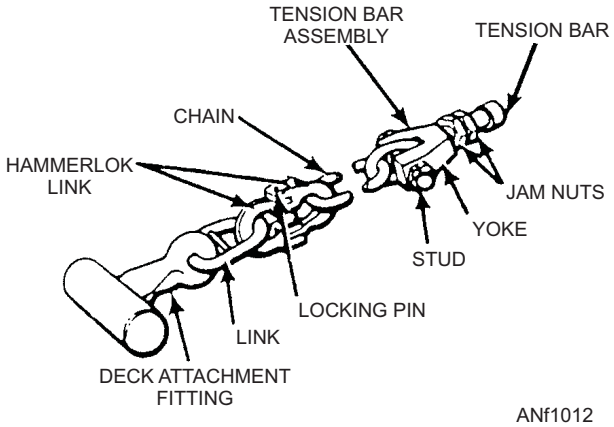

Figure 10-12.—MXU-657/W aircraft restraint.

the A/B (afterburner) tie-down. It consists of a deck attachment fitting, a safety lock retainer, a chain, and a coupler that fits the aircraft holdback fitting.

This assembly has a working load of 30,000 pounds. It weighs about 102 pounds and has no adjustments to lengthen or shorten it. It can be modified by joining two tie-downs together with a dummy link for aircraft requiring it.

A newer version of the A/B tie-down, called the MXU-657/W aircraft restraint, has a different deck attachment fitting, and is shown in figure 10-12. Otherwise, it is identical.

Special high-strength deck fittings are installed aboard ships and at shore stations in designated engine run-up areas. Specific A/B tie-down instructions for each type of aircraft are contained in the specific maintenance instruction manual (MIM).

Aircraft Tow Bars

Two general classes of tow bars are used in naval aviation—those adaptable to only one type of aircraft and those adaptable to more than one type.

The universal aircraft tow bar, Model ALBAR (Adjustable Length Towbar) (fig. 10-13) is the type of tow bar most commonly used by the Navy today. It is available in four different models and lengths. It is used to tow and position aircraft weighing up to 90,000 pounds. The ALBAR is designed for towing aircraft that have nose or tailwheel axle holes, or fuselage or

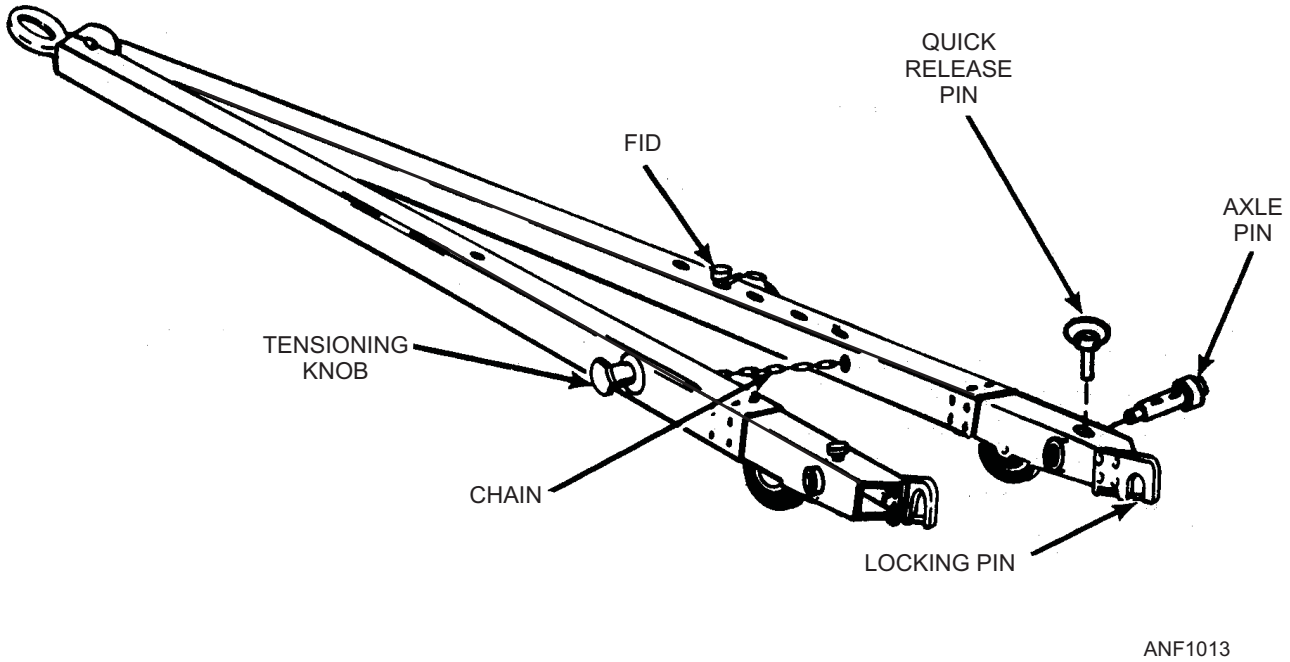

Figure 10-13.—ALBAR universal aircraft tow bar.

landing gear tow rings (fig. 10-14), and it can be configured to accommodate different aircraft.

> **CAUTION**
>
> Before you attempt to tow an aircraft, be sure that the tow bar tensioning chain is under maximum tension when the axle pins are used. When using the tow hooks, ensure the locking pins are closed.

For more information on handling accessories, refer to NAVAIR 00-80T-96, *Support Equipment Common, Basic Handling and Safety Manual*, or for any given aircraft, refer to the "General Information and Servicing" section of the MIM.

Q10-9. What is used to block aircraft main landing gear and support equipment wheels?

Q10-10. Detailed procedures for securing a specific aircraft can be found in what publication?

Q10-11. When the ship is not at flight quarters, who is responsible for maintaining aircraft security or integrity watches?

Q10-12. What is the purpose of an ALBAR?

GENERAL FLIGHT DECK SAFETY PRECAUTIONS

LEARNING OBJECTIVE: Identify the safety precaution to be followed while handling aircraft aboard a carrier and the persons responsible for safety.

The ship's commanding officer is responsible at all times for the safety of embarked aircraft and personnel. The commanding officer or officer in charge of the aircraft squadron/detachment and the pilots of individual aircraft are directly responsible for the safety of assigned aircraft and personnel. Ultimately, safety is the responsibility of all hands.

Nearly all aircraft-handling accidents/incidents or personal injury/death are the result of poor training and supervision, lack of awareness, and/or disregard of handling instructions.

Some of the safety precautions that could prevent dangerous and costly accidents during flight operations aboard carriers are as follows:

1. Never operate or allow personnel under your supervision to operate any machinery or equipment when not thoroughly checked out and qualified on all safety and operating instructions.

2. The deck is considered *foul* any time unauthorized personnel are in or around aircraft parked in the safe-parking area aft of the island.

3. While flight operations are being conducted, no personnel except those authorized and required may be in the catwalks, guntubs, on the flight deck, in the catapult or arresting gear engine rooms, or PLAT/lens room without the express permission of the air officer.

4. Personnel should never stand or otherwise block entrances to the island structure or exits leading off the catwalks.

5. Personnel should not turn their backs on aircraft landing or taxiing out of the arresting gear.

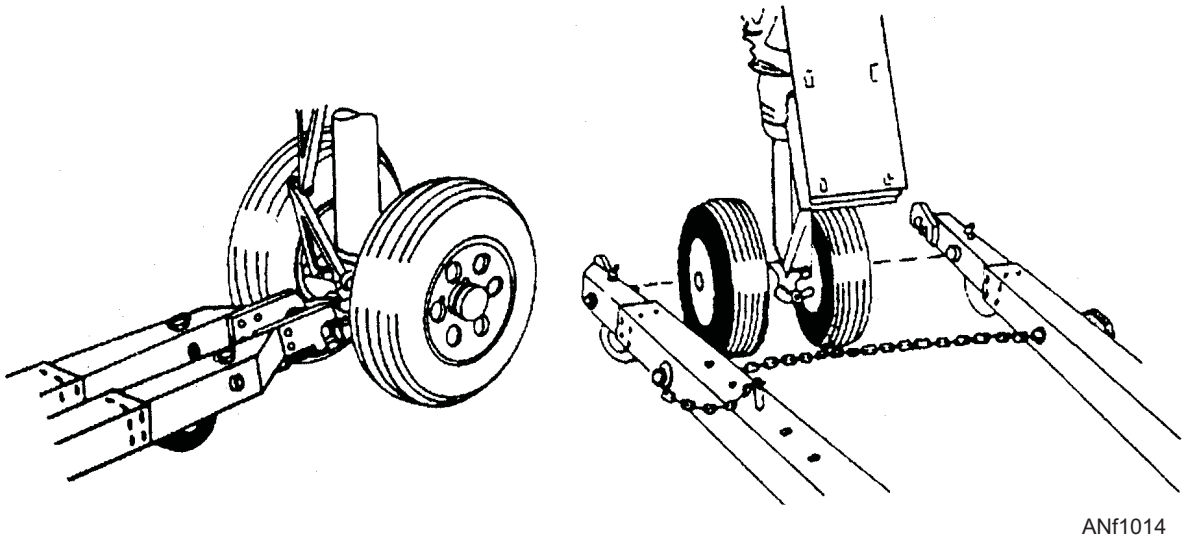

Figure 10-14.—Tow bar attachment.

6. While taxiing aircraft out of the arresting gear, directors must be aware of the activities of the hook runner, tiller-bar man, and the wing walkers.

7. While directing aircraft, the director must be in plain view of the pilot at all times. If the pilot loses sight of his director, he must STOP immediately.

8. No director should give signals to a pilot who is being controlled by another director EXCEPT in an attempt to avert an accident.

9. Never allow yourself to become complacent to the point of permitting unsafe conditions to exist. Complacency is one of the major causes of aircraft accidents/incidents in handling aircraft.

10. Make sure that the brakes are manned before you move an aircraft.

NOTE: If an aircraft with inoperative brakes is to be respotted, the cockpit must **NOT** be manned, and the chockmen must be in position to chock the main wheels instantly when ordered.

11. Use the proper tow bar for the aircraft that is being moved.

12. Use wing and tail walkers in all movements.

13. Use chockmen at all times in case the aircraft is to be stopped without brakes or in the instance where brakes fail. Use chockmen when you back an aircraft to the deck-edge spots.

14. Never move an aircraft when there is doubt as to clearance.

15. Watch for unexpected ship movement that may have a bearing on aircraft being moved.

16. Be extremely cautious when you handle aircraft on and off of elevators. There is always the danger of losing one over the side because they are at the extreme edge of the deck.

17. Make sure the elevator is in the full up or down position before you move an aircraft on or off it.

18. Because of the small confines of the hangar deck, it is of the utmost importance that aircraft be moved with extreme caution. Ensure that hydraulic brake fluid pressure is available and is sufficient to safely accomplish the handling operation.

19. Handling of other equipment around aircraft should always be performed with utmost care.

20. Unlock the nose or tail wheel (if applicable) before you move an aircraft.

21. Be particularly careful when you move a jet that has been started. Ensure that all personnel are clear of the intake and jet blast.

22. Stay clear of the launching and landing areas unless you are part of that operation.

23. Stay alert when you are working around aircraft. There is never room for carelessness, daydreaming, or skylarking on the flight deck.

24. Keep constant vigilance for coworkers. This helps to avoid accidents.

25. Ensure that aircraft wheel chocks and tie-down chains are always used whenever an aircraft is not being moved.

26. Always wear articles of flight-deck clothing in the following manner:

- Helmets on and buckled, goggles down over eyes.
- Flight-deck jerseys on with sleeves rolled down.
- Life vest on and fastened.
- Wear safety shoes.

27. Be alert for slick deck areas. Clean spillage from the deck as soon as possible.

28. Aircraft with wings folded are not to be spotted, towed, or taxied immediately behind a jet blast deflector when another aircraft is at high-power turnup on the catapult.

29. You must strictly observe all safety precautions when working around aircraft equipped with an ejection seat. Accidental actuation of the firing mechanism can result in death or serious injury to anyone in the cockpit area.

30. **Beware of jet blast, props, and rotors.**

Q10-13. Who is ultimately responsible for safety?

Q10-14. When an aircraft is being towed with inoperative brakes, should the cockpit be manned?

AIRCRAFT HANDLING OPERATIONS ASHORE

LEARNING OBJECTIVE: Recognize aircraft handling operations ashore, including spotting, securing, and operating vehicles on flight lines and around aircraft. Identify the hazards associated with working around aircraft.

The methods and procedures for handling aircraft ashore are similar to those afloat. When an air wing or squadron is shore based, it operates on air stations that have paved spotting areas. The area where a particular group of aircraft is spotted or parked is referred to as "the line." Aircraft are spotted on the line for servicing, loading, maintenance, and checking for operational readiness. It is the responsibility of the personnel assigned to the line crew to direct and spot the aircraft.

The line is spotted following the flight schedule instructions. Aircraft must be spotted for engine turnup, taxiing, or towing without endangering other aircraft on the line.

In directing an aircraft that is taxiing from the line, the director should remain in control of the aircraft until it is clear of other aircraft or obstructions in the spotting area. Incoming aircraft should be met at the edge of the spotting area and directed to the appropriate spot.

Transient aircraft often require assistance in taxiing from the runway to the spotting area. An appropriate vehicle that has the words "**follow me**" displayed in large letters is used. The vehicle meets the aircraft at the end of the runway or an intersection to the runway and leads it to the spotting area or flight line.

Personnel assigned to flight line duty should prepare for possible emergencies by becoming thoroughly familiar with the various types of fire-fighting equipment available on the line. They must know their location and capabilities and ensure, by frequent inspection, that they are always ready for use.

The use of standard color-coded fire extinguishers promotes greater safety and lessens the chances of error, confusion, or inaction in time of emergency. Coding distinguishes flight-line fire extinguishers from building fire equipment.

The type of extinguisher, together with the class of fire it extinguishes, must be painted on a 6-inch color band. The letters are black and at least 1 inch in height.

The 6-inch band around the top of the extinguisher should be painted as follows:

Carbon Dioxide (CO_2)..…Yellow

AFFF Type.....……Silver or white

Purple K Powder.....……Purple

Halon.....……Fluorescent yellow

Carts for handling the 50-pound extinguisher bottles should be painted the same color as the extinguisher band. The containers or holders for the other fire extinguishers located on the line may also be painted the same color as the extinguisher band.

MULTIENGINE AIRCRAFT HANDLING

Because each type of multiengine aircraft requires slightly different handling procedures, this discussion is limited to general handling procedures. Specific handling procedures for specific aircraft may be found in the "General Information and Servicing" section of the MIM.

Many multiengine aircraft have a means of steering the nosewheel from the cockpit. While this provides more effective control when the aircraft is taxied, it also limits the radius of turns. When an aircraft equipped with cockpit steering is being directed, allow sufficient space as a turn is being made. The nosewheel steering system should be disengaged, if possible, when an aircraft is towed by the nosewheel.

Special towing equipment is provided for each type of multiengine aircraft. This consists of a nosewheel towing and steering bar for forward towing and a main gear tow bar or adapter for aft towing. The nosewheel bar is used to steer the aircraft when towing it from aft.

Large aircraft should be towed slowly and carefully. Sudden starts, stops, and turns must be avoided. When an aircraft is towed, the brakes should be engaged only in an emergency. If a quick stop is necessary, the brakes of the tractor and aircraft should be applied at the same time (the aircraft move director coordinates this action by blowing a whistle).

In addition to the above handling instructions, the following safety precautions should be observed:

1. During towing operations, have a qualified operator in the pilot's seat to operate the brakes when necessary. Ensure that there is sufficient hydraulic pressure for brake operation.

2. When aircraft are moved in close spaces, a taxi director and sufficient walkers should be placed to provide centralized control and to ensure clearance of obstructions.

3. If the aircraft is equipped with a tail wheel, unlock the tail wheel before the aircraft is moved.

4. Ensure that the landing gear safety lockpins or down locks are installed before the aircraft is towed.

5. Do not turn the nosewheel beyond the nosewheel turn limits. Structural damage will result.

SECURING AIRCRAFT ASHORE

The parking areas on air stations are usually equipped with tie-down pad eyes, which are sunk into the surface of the concrete aprons on the "line." One end of the tie-down chains or securing line assemblies are attached to the aircraft tie-down fittings, and the other end is secured to the pad eyes and properly adjusted.

> **CAUTION**
>
> When you are securing aircraft with manila line, leave sufficient slack for shrinkage that occurs when the line becomes wet.

NOTE: Most aircraft are equipped with their own special securing accessory equipment, such as intake, exhaust, canopy, and external flight instrument covers, propeller or rotor blade restraints and tie-downs, flight control and landing gear lock pins, etc.

The fundamental rules for securing aircraft ashore are as follows:

1. Direct or locate the aircraft to a protected spot.
2. Park the aircraft into the wind if possible.
3. Place chocks both in front of and behind each main landing gear wheel.
4. Ground the aircraft.
5. Place all controls in neutral position and lock or secure.
6. Tie the aircraft down.
7. Install the protective covers.
8. Secure propellers and rotor blades as required
9. Ensure brakes are set.

> **CAUTION**
>
> Do not install intake or exhaust engine covers when the engine is hot.

When high winds threaten, move the aircraft inside the hangar if possible. If not, ensure tie-downs or lines and anchorages are doubled and control surfaces are secured with battens.

Multiengine aircraft are usually tied down at six points. These points are the landing gear, the tail, and each wing. Detailed information concerning securing a particular aircraft may be found in the "General Information and Servicing" section of the MIM.

Q10-15. On air stations ashore, what is the area called where a particular group of aircraft is spotted or parked?

Q10-16. What is the purpose of color coding flight line fire extinguishers?

Q10-17. Why should sufficient slack be left in manila line when used for securing aircraft?

HELICOPTER HANDLING

LEARNING OBJECTIVE: Recognize helicopter handling signals, activities, securing procedures, and general safety precautions.

Helicopters are used on CV/(N)/LHD/LHA/LPH/LPD type vessels. They are also used on destroyers, fast frigates, replenishing ships, cruisers, and, of course, shore stations. There are areas that differ between handling fixed-wing aircraft and helicopters. Unique flight characteristics and aircraft operation require special handling procedures.

HELICOPTER TIE-DOWN AND SECURING PROCEDURES

With the exception of the main rotor blade tie-downs, helicopter tie-downs and securing procedures are similar to those for conventional fixed-wing aircraft.

Tie-downs for the main rotor blades are used to prevent damage that might be caused by gusty and turbulent wind conditions when the blades are in a spread position. This type of tie-down usually consists of a canvas boot with an attached length of manila line; however, some helicopter rotor blades have special fittings and attachment accessories to accomplish this task.

The canvas boot is placed over the tip of the rotor blade, and the boot line is then secured either to a deck fitting or to an aircraft fitting on the helicopter itself.

NOTE: Rotor blade securing lines should be taut enough to hold the blades without applying excessive bending force. Check lines for security and shrinkage when wet, and readjust lines when required.

An example of a helicopter tie-down configuration is given in figure 10-15. Always consult the applicable MIMs "General Information and Servicing" section for detailed securing instructions for a specific type of helicopter.

HAND SIGNALS

Hand signals shown in figure 10-16 are used when helicopters are directed. As you can see, they differ greatly from fixed-wing aircraft. The director, called a Landing Signalman Enlisted (LSE), is normally stationed on a 45-degree bearing to the portside of the helicopter if the pilot in control is in the left seat, and to the starboard side if the pilot in control is in the right seat. When you are acting as LSE, you should position yourself upwind of the area in which the helicopter is to be launched and in a similar position for a landing.

NOTE: Helicopter hand signals "**wave-off**" and "**hold**" are mandatory; all others are advisory in nature when directing aircraft.

HELICOPTER FLIGHT OPERATIONS

Carrier flight decks and air station runways or taxiways have marked helicopter landing areas that are controlled by Pry-Fly (afloat) and the control tower (ashore) for helicopter takeoff and landings. See figures 10-17 and 10-18.

The LSE, under the supervision of the air officer, is responsible for visually signaling to the helicopter, thus assisting the pilot in making a safe takeoff and/or landing on the ship. He or she is responsible for directing the pilot to the desired deck spot and for ensuring general safety conditions of the flight deck, to include control of the flight deck crew.

Flight deck operations with rotors engaged are particularly hazardous to personnel. The tail rotor of some helicopters revolves in a vertical plane fairly close to the deck. In addition, the possibility always exists that the main rotor blades may strike the deck during engagement or disengagement of the rotor system due to the wind being out of perimeters or hurling pieces of debris. Because of this hazard, flight deck personnel should be kept to the minimum needed for the operation.

> **CAUTION**
>
> Aircraft engines, auxiliary power plant starts, blade spread/fold, and rotor engagement must not be accomplished in wind conditions exceeding the individual aircraft's NATOPS limitations.

Once the proper commands (table 10-3) are given to the flight deck officer and the flight deck lighting has been activated from Pry-Fly (table 10-4), the LSE supervises and is responsible for, but not limited to, the following:

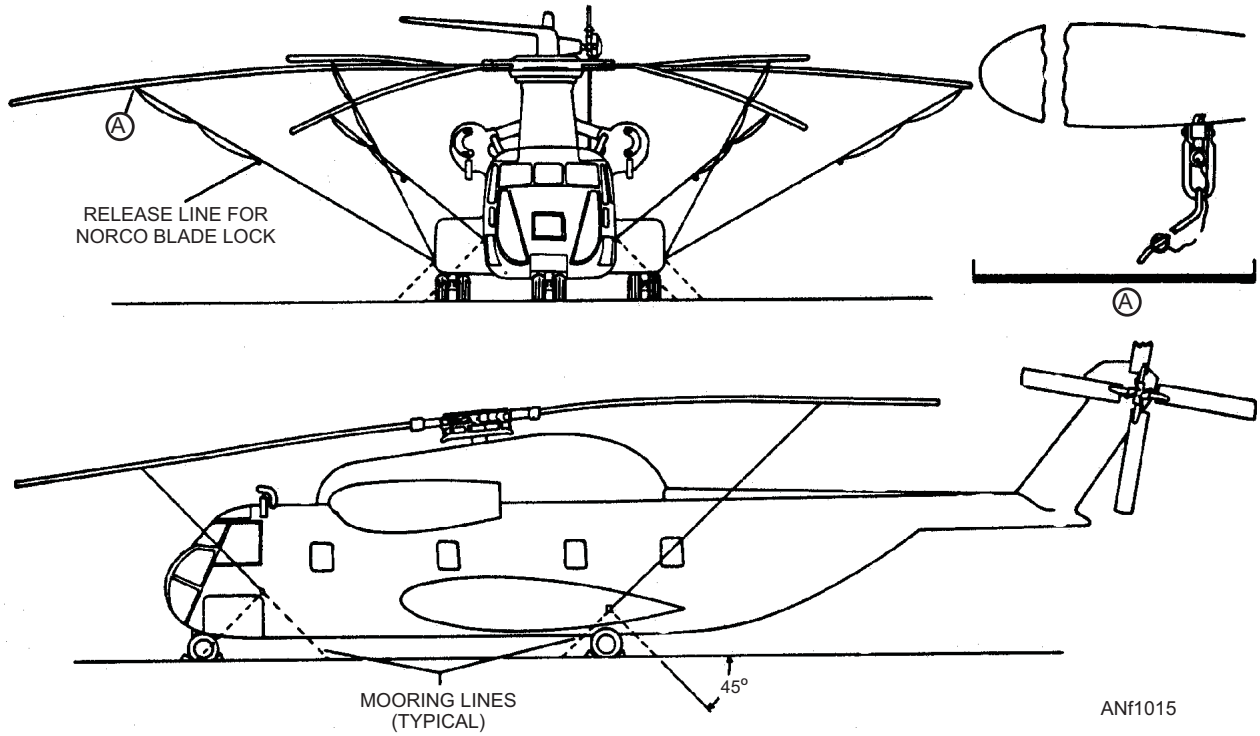

Figure 10-15.—Tie-down configuration (CH-53A/D).

SIGNAL	DAY	NIGHT	REMARKS
1 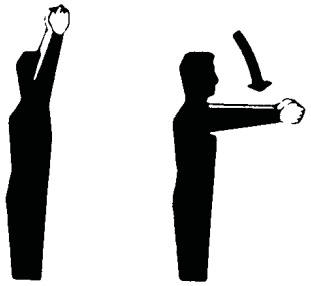 LANDING DIRECTION	Marshaler stands with arms raised vertically above head and facing toward the point where the aircraft is to land. The arms are lowered repeatedly from a vertical to a horizontal position, stopping finally in the horizontal position.	Same as day signal with addition of wands.	
2 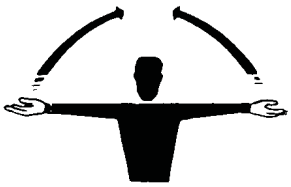 MOVE UPWARD	Arms extended horizontally sideways beckoning upwards, with palms turned up. Speed of movement indicates rate of ascent.	Same as day signal with addition of wands.	Conforms to ICAO signal.
3 HOVER	Arms extended horizontally sideways, palms downward.	Same as day signal with addition of wands.	Conforms to ICAO signal.
4 MOVE DOWNWARD	Arms extended horizontally sideways beckoning downwards, with palms turned down. Speed of movement indicates rate of descent.	Same as day signal with addition of wands.	Conforms to ICAO signal.

ANf1016a

Figure 10-16.—Helicopter hand signals (page 1 of 11).

SIGNAL	DAY	NIGHT	REMARKS
5 MOVE TO LEFT	Right arm extended horizontally sideways in direction of movement and other arm swung over the head in same direction, in a repeating movement.	Same as day signal with addition of wands.	
6 MOVE TO RIGHT	Left arm extended horizontally sideways in direction of movement and other arm swung over the head in the same direction, in a repeating movement.	Same as day signal with addition of wands.	
7 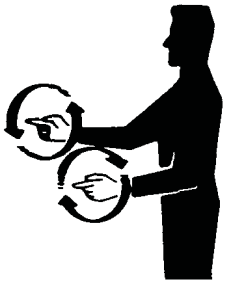 LOWER WHEELS	When aircraft approaches director with landing gear retracted, marshaler gives signal by side view of a cranking circular motion of the hands.	Same as day signal with addition of wands.	
8 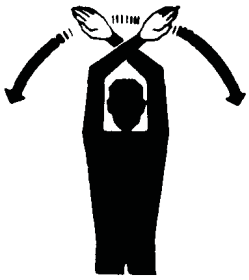 WAVE OFF	Waving of arms over the head.	Same as day signal with addition of wands.	Signal is mandatory.

ANf1016b

Figure 10-16.—Helicopter hand signals (page 2 of 11).

SIGNAL	DAY	NIGHT	REMARKS
9 LAND	Arms crossed and extended downwards in front of the body.	Same as day signal with addition of wands.	Conforms to ICAO signal.
10 DROOP STOPS OUT	When rotor starts to “run down” marshaler stands with both hands raised above head, fists closed, thumbs pointing out.	Same as day signal with addition of wands.	
11 DROOP STOPS IN	When droop stops, go in, marshaler turns thumbs inwards.	Same as day signal with addition of wands.	
12 REMOVE BLADE TIEDOWNS	Left hand above head, right hand pointing to individual boots for removal.	Same as day signal with addition of wands.	

ANf1016c

Figure 10-16.—Helicopter hand signals (page 3 of 11).

SIGNAL	DAY	NIGHT	REMARKS
13 ENGAGE ROTOR(S)	Circular motion in horizontal plane with right hand above head.	Same as day signal with addition of wands.	
14 HOOK UP LOAD	Rope climbing motion with hands.	Same as day signal with addition of wands.	
15 RELEASE LOAD	Left arm extended forward horizontally, fist clenched, with right hand making vertical pendulum movement with fist clenched.	Same as day signal with addition of wands.	
16 LOAD HAS NOT BEEN RELEASED	Bend left arm horizontally across chest with fist clenched, palm downward; open right hand pointed up vertically to center of left fist.	Same as day signal with addition of wands.	

ANf1016d

Figure 10-16.—Helicopter hand signals (page 4 of 11).

SIGNAL	DAY	NIGHT	REMARKS
17 WINCH UP	Left arm horizontal in front of body, fist clenched, right hand with palm turned upwards, making upward motion.	Same as day signal with addition of wands.	
18 WINCH DOWN	Left arm horizontal in front of body, fist clenched, right hand with palm turned downwards, making downnward motion.	Same as day signal with addition of wands.	
19 CUT CABLE	Right arm extended forward horizontally, fist clenched, left arm making horizontal slicing movements below the right fist, palm downward.	Same as day signal with addition of wands.	
20 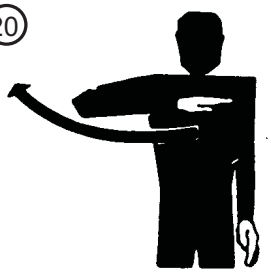 SPREAD PYLON	Bend elbow across chest, palm downward. Extend arm outward to horizontal position, keeping palm open and facing down.	Same as day signal with addition of wands.	

ANf1016e

Figure 10-16.—Helicopter hand signals (page 5 of 11).

SIGNAL	DAY	NIGHT	REMARKS
21 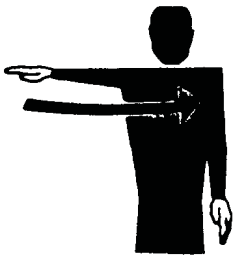 FOLD PYLON	Extend right arm horizontally, palm downward. Bend arm keeping palm down.	Same as day signal with addition of wands.	
22 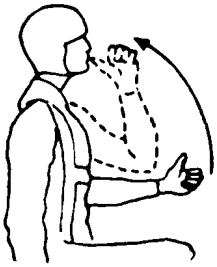 I DESIRE HIFR/FUEL	Helicopter crew member brings thumb to mouth as if drinking from glass.	Same except use red lens flashlight.	
23 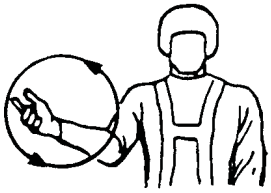 COMMENCE FUELING	Helicopter crew member makes circular motion with right hand.	Helicopter crew member makes circular motion with red lens flashlight.	
24 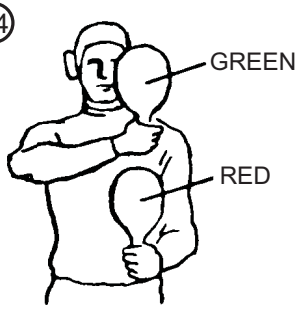 AM PUMP FUELING	Ship's fuel crew member holds green device vertically over red device.	Ship's fuel crew member holds green wand vertically over red wand.	

ANf1016f

Figure 10-16.—Helicopter hand signals (page 6 of 11).

SIGNAL	DAY	NIGHT	REMARKS
25 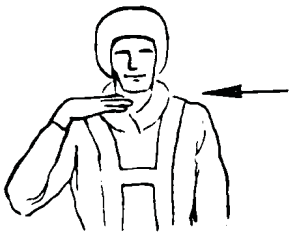 CEASE FUELING	Helicopter crew member makes horizontal cutting motion of right hand across throat.	Helicopter crew member makes horizontal motion of red lens flashlight.	
26 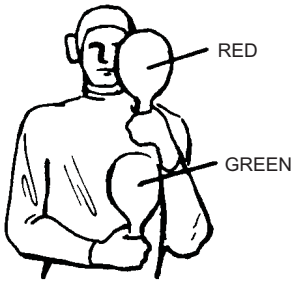 HAVE CEASED PUMPING FUEL	Ship's fuel crew member holds red device over green device.	Ship's fuel crew member holds red wand vertically over green wand.	
27 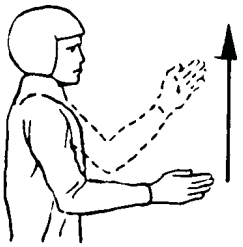 DESIRE TO MOVE OVER DECK AND RETURN HOSE	Helicopter crew member makes vertical motion of hand.	Helicopter crew member makes vertical motion of red lens flashlight.	
28 EXECUTE EMERGENCY BREAKAWAY	LSE/director makes waveoff signal.	LSE/director makes waveoff signal with wands.	Signal is mandatory.

ANf1016g

Figure 10-16.—Helicopter hand signals (page 7 of 11).

SIGNAL	DAY	NIGHT	REMARKS
29 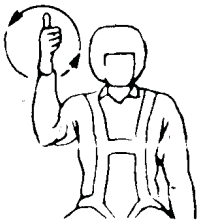 READY TO START ENGINE (pilot)	Moves hand in a circle perpendicular to the deck; follows with a thumbs up signal. Signify by number of fingers, engine to be started	Turns on flashlight or moveable light and moves it in a circle perpendicular to the deck.	
30 READY TO ENGAGE ROTORS (pilot)	Moves hand in horizontal circle at eye level, index finger extended. Aircraft lights FLASHING BRIGHT.	Same as day except holds red light in hand. Aircraft lights FLASHING DIM.	At night, aircraft lights should be on FLASHING DIM until aircraft is declared up and ready for takeoff by the pilot.
31 READY TO ENGAGE ROTORS (LSE)	FACES FLY CONTROL: Holds left fist above head; gives circular motion of right hand above head, index finger extended.	Rotates one wand at chest level; holds other wand above head.	The air officer shall signal authority to engage rotors by illuminating a yellow rotating beacon.
32 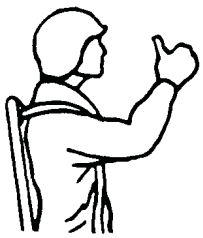 READY FOR TAKEOFF (pilot)	Gives thumbs up signal at eye level. Aircraft lights STEADY BRIGHT.	Places running and formation lights on STEADY DIM. May give thumbs up signal by turning on flashlight or other moveable lights and moving it up and down.	

ANf1016h

Figure 10-16.—Helicopter hand signals (page 8 of 11).

SIGNAL	DAY	NIGHT	REMARKS
33 READY FOR TAKEOFF (LSE)	FACES FLY CONTROL. Holds right thumb up at eye level; holds left fist at eye level.	Signal not required. Pilot's STEADY DIM indicates readiness to Fly Control.	The air officer shall signal authority for launch of helicopters by illuminating a green rotating beacon in addition to the rotating yellow beacon.
34 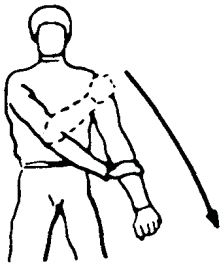 REMOVE TIEDOWNS (LSE)	To tiedown crew: Makes wiping motion down left arm with right hand.	Same as day except with addition of wands.	
35 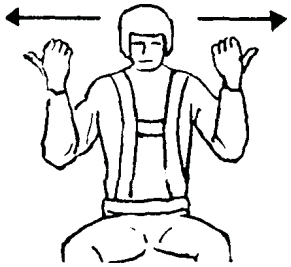 REMOVE CHOCKS AND TIEDOWNS(pilot)	Swings arms apart, thumbs extended outwards.	Using hand held light or flashlight, gives on/off signals at 1-second intervals.	
36 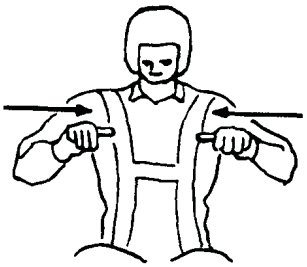 INSERT CHOCKS AND TIEDOWNS (pilot)	Swings arms together, thumbs extended inwards. In single piloted aircraft, pilot may swing one arm alternately from each side, thumb extended inwards.	Moves hand held light or flashlight at eye level in a horizontal plane alternately inwards from each side.	

ANf1016i

Figure 10-16.—Helicopter hand signals (page 9 of 11).

SIGNAL	DAY	NIGHT	REMARKS
37 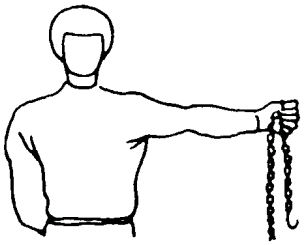 TIEDOWNS REMOVED (deck crew)	Stands in full view of pilot and LSE and holds tiedown and chocks extended to side.	Same as day except illuminates tiedown with amber flashlight.	
38 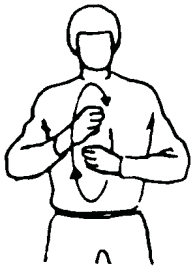 INSTALL TIEDOWNS (LSE)	To tiedown crew: Rotates hands in circle perpendicular to and in front of his body.	Same as day except with amber wands.	Give “hold” signal as soon as first tiedown is attached.
39 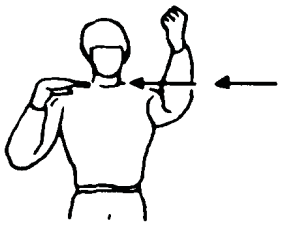 DISENGAGE ROTORS (LSE)	Holds left fist above head; makes throat cutting action with right hand.	Same as day except with amber wands.	Give “hold” signal as soon as first tiedown is attached.
40 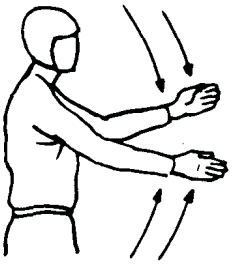 HOOK NOT DOWN/UP	Arms extended, make short up and down chopping action, alternating hands.	Same as day except with amber wands.	

ANf1016j

Figure 10-16.—Helicopter hand signals (page 10 of 11).

SIGNAL	DAY	NIGHT	REMARKS
41 SWING TAIL LEFT	Use standard fixed wing turn signal, pointing with hand to wheel to be pivoted and giving “come on “ with other hand.	Same as day except with amber wands.	
42 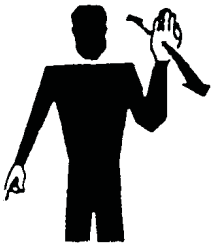 SWING TAIL RIGHT	Use standard fixed wing turn signal, pointing with hand to wheel to be pivoted and giving “come on “ with other hand.	Same as day except with amber wands.	
43 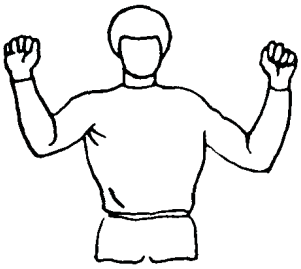 HOLD POSITION	Makes clenched fists at eye level.	Hold crossed wands (any color) overhead.	Signal is mandatory.
44 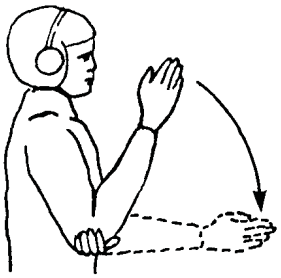 ANTENNA IN DOWN POSITION	Rest elbow in left palm at waist level. Bring right hand down to horizontal position.	Same except with wands.	

ANf1016k

Figure 10-16.—Helicopter hand signals (page 11 of 11).

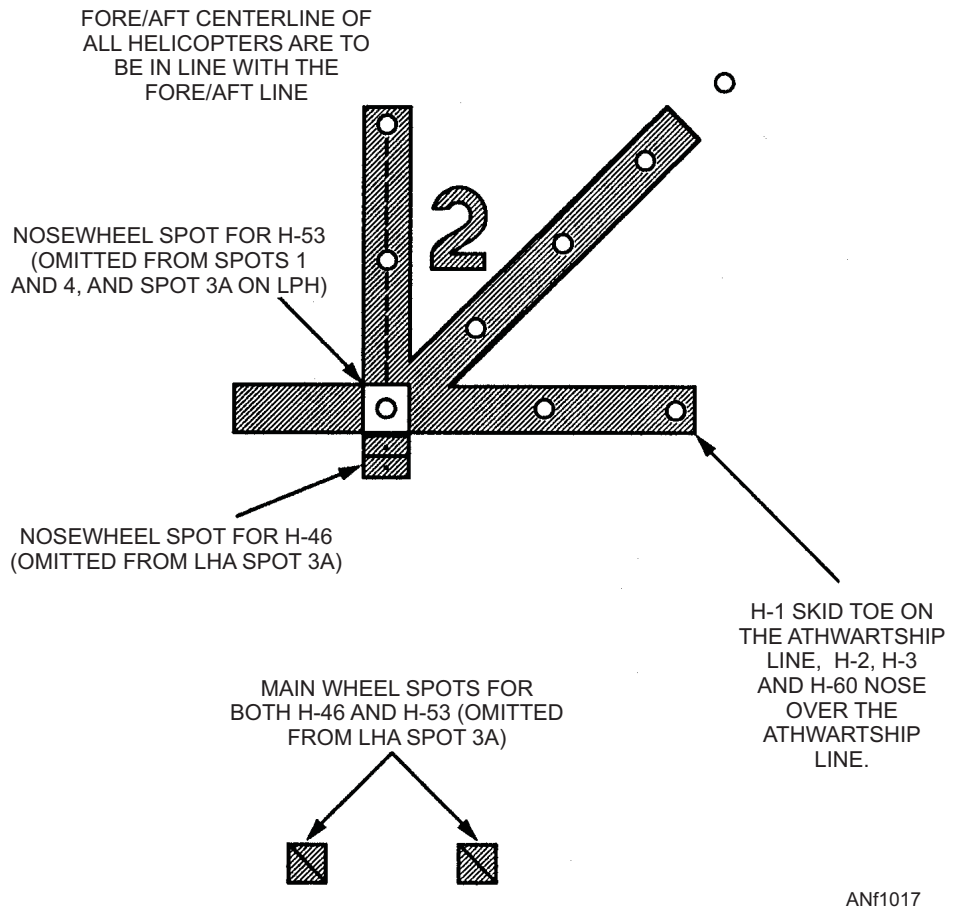

Figure 10-17.—Shipboard helicopter landing spot (typical).

- Launch and recovery operations
- Chocks and tie-downs (as required)
- Fire bottle and guard (posted)
- Auxiliary power plant start/shut down
- Clearances around the aircraft
- Rotor blade spread/fold
- Engine start/shut down
- Rotor engagement/disengagement
- The movement of all personnel around the aircraft when loading or unloading troops, cargo, or fueling
- All other activities around the launch or landing area
- External material condition and security of the aircraft

For detailed information on shipboard V/STOL aircraft operating procedures, you should refer to the *Naval Warfare Publication Shipboard V/STOL Aircraft Operating Procedures*, NWP-63-1; the *LHD/LHA/LPH/LPD NATOPS Manual*, NAVAIR 00-80T-106; and the *Shipboard Helicopter Operating Procedures*, NWP-42, latest revision.

HELICOPTER SAFETY PRECAUTIONS

During aircraft operations afloat or ashore, the following helicopter safety precautions should be observed:

- Do **not** approach or depart a helicopter without direction from the LSE.
- Do **not** approach or depart a helicopter while the rotors are being engaged or disengaged.
- Helicopters should **not** be taxiied on the flight deck.
- Helicopters should **not** be towed or pushed while the rotors are engaged.
- Helicopters should **not** be launched or recovered and rotors should **not** engaged or disengaged while the ship is in a turn or the wind is out of parameters.

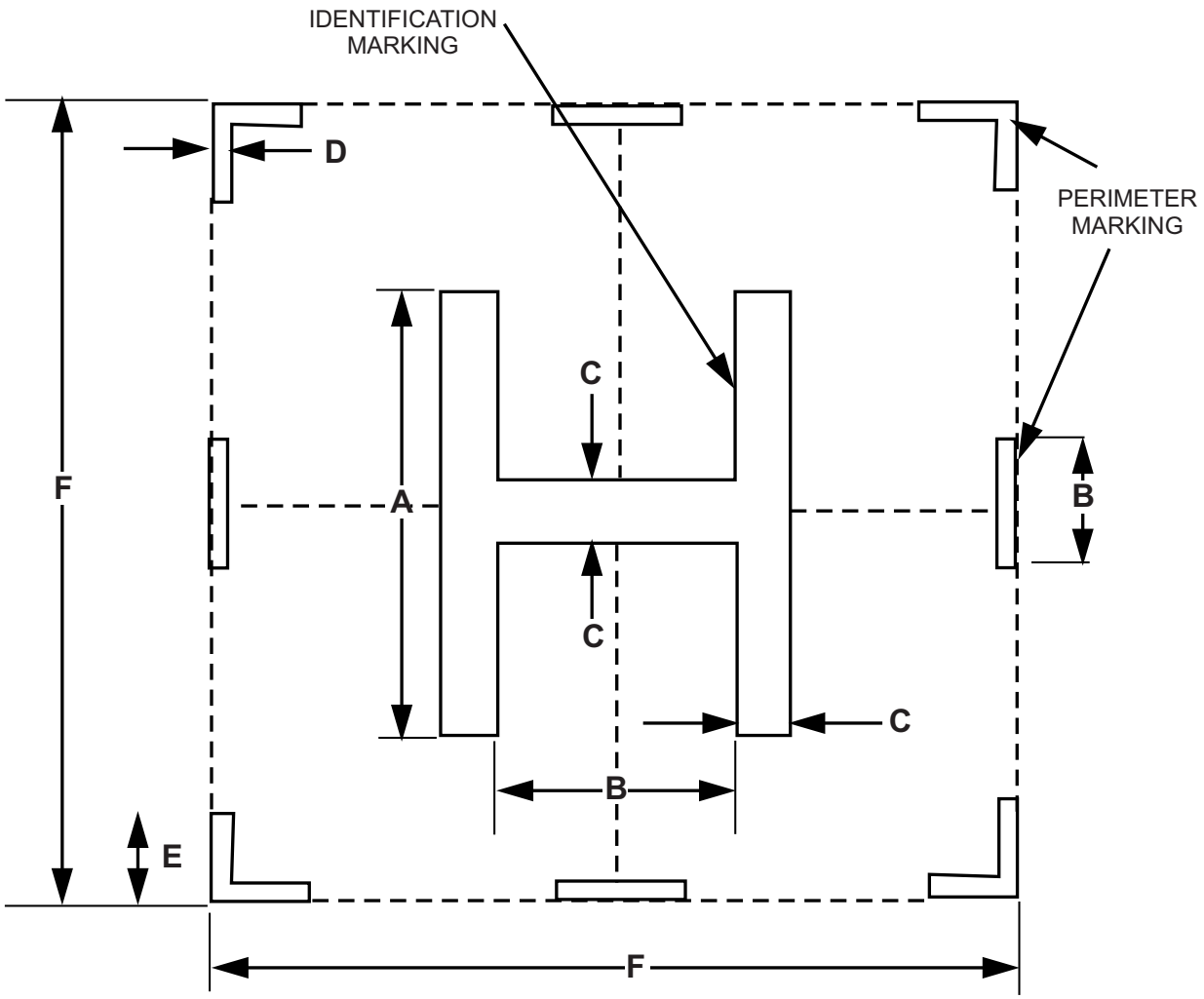

DIMENSIONS

A = 0.6F BUT 60' MAX
B = 0.5A

HELIPAD SIZE (F)	PATTERN LINE WIDTH (C)	PERIMETER EDGE WIDTH (D)	CORNER EDGE LENGTH (E)
80' - 99'	5'	24"	10' (TYP)
100' - 150'	6'	30"	12' (TYP)

COLOR: RETROREFLECTIVE AVIATION SURFACE WHITE, EXCEPT HELIPADS FOR DAY OPERATIONS ONLY MAY BE NONRETROREFLECTIVE WHITE.

ANf1018

Figure 10-18.—Air station helipad identification and perimeter markings.

- A helicopter should **not** be flown over any other aircraft during takeoff and landing.
- **Never** approach a tail rotor type helicopter from the rear while the rotors are turning.
- Personnel required to be in the area of operating helicopters should exercise extreme caution and observe the signals or directions from the aircraft director.

Q10-18. What is the purpose of helicopter rotor blade tie-downs?

Q10-19. What are the two mandatory helicopter hand signals?

Q10-20. Who is responsible for directing the pilot to the desired deck spot and for ensuring general safety conditions of the flight deck?

Table 10-3.—Flight Deck Commands

EVOLUTION	COMMAND	DISPLAY	MEANING (HELO)	MEANING (AV-8)
1. Prepare to start engines	Check chocks, chains, tie-downs, fire bottles, and all loose gear about the flight deck. Helmets buckled, goggles down, start APP/GTS on LSE/director signal.	Red signal in flight deck area	Verify starting wind limitations chocks and tie-downs in place. Boots removed and stowed. Secure all loose gear. Man fire extinguishers.	Intake blanks clear GTS wind limits met, chocks, tie-downs in place, loose gear secured. Man fire extinguishers.
2. Start engines	Start engines	Red signal in flight deck area	Authority for responsible flight deck personnel to signal for starting engines. Ship not ready for flight operations.	
3. Engage/ disengage rotors	Stand clear of rotors (20 second pause) - engage/disengage rotors	Amber signal in flight deck area	Ship is ready for the pilot to engage rotors. Authority for responsible flight deck personnel to signal for engaging rotors when the immediate area is cleared. Ship not ready for flight operations.	Squadron personnel conduct poststart checks (i.e., controls) clear exhaust areas.
4. Removal of tie-downs	Remove all tie-downs	Not applicable Note: Emcon (Red, Green, Red)	Remove tie-downs from aircraft and show to pilot. LSE points to tie-downs and shows one finger to the pilot for each tie-down removed.	
5. Launch	Launch aircraft	Green signal in flight deck area	Ship is ready in all respects for flight operation. Authority for responsible flight deck personnel to launch aircraft when pilot is ready and tie-downs and chocks have been removed.	
6. Aircraft approaching	Standby to recover aircraft, spot _____.	Red signal in flight deck area	Prepare designated landing area to land aircraft. Ship not ready to recover aircraft.	
7. Recover	Land aircraft	Green signal in flight deck area	Ship is ready in all respects to land aircraft.	
NOTE: Flight deck rotating beacon signals are for Pri-Fly control of flight deck operations only. These lights are not to be interpreted by pilots as clearance/denial for any evolution.				

Table 10-4.—Deck Status Lights/Rotating Beacon Signals for Helicopter Operations

EVOLUTION	DECK STATUS LIGHTS/ ROTATING BEACON SIGNAL
Start Engines	Red
Engage Rotors	Amber
Launch	Green
Recovery	Green
Disengage Rotors	Amber
Shutdown	Red

Q10-21. What color should the deck status lights/ rotating beacon signal be to engage rotors?

Q10-22. Is it permissible to taxi a helicopter on the flight deck?

SUMMARY

In this chapter you have learned about operating SE around aircraft, afloat and ashore aircraft operations, handling and securing procedures, hand signals, aircraft handling accessories, and the related safety procedures and requirements.

ASSIGNMENT 10

Textbook Assignment: "Line Operations and Safety," chapter 10, pages 10-1 through 10-50.

10-1. What is one of the busiest, most important and dangerous divisions in a squadron?

1. Line
2. Ordnance
3. Maintenance
4. Supply

10-2. When fueling an aircraft ashore, the refueling vehicle should be parked in what position?

1. Downwind side headed away from the aircraft
2. Behind the aircraft wing after engine cooling
3. Perpendicular to the aircraft close to the fueling point
4. Forward of the aircraft and parallel to the wing

10-3. What is the maximum speed limit for vehicles operating on airfields within 50 feet of aircraft and hangars?

1. 2 miles per hour
2. 5 miles per hour
3. 10 miles per hour
4. 12 miles per hour

10-4. What is the speed limit for vehicles operating on runways, taxiways, parking areas, ramps, and work areas?

1. 5 miles per hour
2. 10 miles per hour
3. 15 miles per hour
4. 20 miles per hour

10-5. When aircraft are towed, the towing speed should NEVER be faster than the slowest person can walk or exceed 5 miles per hour.

1. True
2. False

10-6. What method is used to identify handling and servicing equipment used around aircraft?

1. Identification plates
2. Placards and reflective tape
3. 12-inch black letters
4. Colors and markings

10-7. What color is most support equipment painted?

1. Yellow only
2. Black and yellow
3. Yellow and white
4. Red and white

10-8. On support equipment, the danger areas, such as intakes or exhausts, are painted what color?

1. Yellow
2. Red
3. White
4. Black

10-9. What is the minimum protective clothing required for all personnel to wear while working on the flight deck?

1. Cranial impact helmet, goggles, and sound attenuators
2. Long sleeve jerseys and trousers with steel toe flight deck boots
3. Inflatable life preserver with distress light marker, sea dye marker, and whistle
4. All of the above

10-10. Which division is responsible for handling aircraft on the flight deck?

1. V-1 division
2. V-2 division
3. V-3 division
4. V-4 division

10-11. Which division is responsible for handling aircraft in the hangar bay?

1. V-1 division
2. V-2 division
3. V-3 division
4. V-4 division

10-12. In addition to the director, crew leader, and safetyman, how many Airmen are normally assigned to complete the aircraft handling crew?

1. Two to five
2. Four to seven
3. Six to ten
4. Eight to eleven

10-13. In an aircraft handling crew, what member is the only petty officer assigned to the crew?

1. Director
2. Crew leader
3. Safetyman
4. Chockman

10-14. What member in the aircraft handling crew is responsible for informing the director about the safety of the aircraft and to prevent accidental damage and personal injury?

1. Crew leader
2. Safetyman
3. Tractor driver
4. Wing walker

10-15. When aircraft are being moved on the flight deck or hangar bay by handling crews, what method is used to give directions?

1. Radio headsets
2. Hand signals
3. Whistles
4. All of the above

10-16. Once the requirements for an aircraft launch are known, which of the following officers holds a brief with all the key flight deck personnel?

1. Catapult officer
2. Flight deck officer
3. Aircraft handling officer
4. Flight deck safety officer

10-17. What color cranial, jersey, and floatation vest identifies aircraft handling officers and plane directors?

1. Green
2. Yellow
3. Blue
4. Purple

10-18. Aircraft are assigned a spotting sequence for launch based on what criteria?

1. Aircraft type, mission, and catapult
2. The pilot's seniority
3. The aircraft's bureau (side) number
4. The aircraft's fuel load

10-19. When aircraft launching begins, what type aircraft is normally launched first?

1. Turboprop
2. Jets
3. Rescue helicopter
4. Reciprocating engine

10-20. What is the purpose of a foreign object damage (FOD) walkdown?

1. To check all aircraft engines for loose gear
2. To pick up all debris from the deck
3. To ensure all support equipment is secured and inspected for damage
4. To check all aircraft tires for embedded objects

10-21. How many hours a day is crash and salvage manned and ready aboard ship?

1. During flight operations only
2. During an aircraft crash or fire only
3. When directed by the air boss
4. 24 hours a day

10-22. Which of the following rules is extremely important to remember while directing taxiing aircraft?

1. Ensure the pilot can see the signals being given
2. The person being signaled must thoroughly understand the signal
3. Exercise extreme caution to prevent personnel from being caught in the jet blast
4. Each of the above

10-23. Who is responsible for the movement of all aircraft on the flight deck?

1. Primary flight control (PRI-FLY)
2. Flight deck control
3. The air boss
4. The mini boss

10-24. Who has control of all flight deck lighting, landing spot lighting, flight deck floodlights, and the flight deck rotary beacon?

1. The landing signal officer's platform
2. Flight deck control
3. Primary flight control (PRI-FLY)
4. The engineering department

10-25. Which of the following personnel is responsible for launching aircraft?

1. Flight deck officer
2. Catapult officer
3. Air boss
4. Commanding officer

10-26. Which of the following personnel ensures that the aft flight deck is ready for landing aircraft?

1. Arresting gear officer
2. Air boss
3. Flight deck officer
4. Catapult officer

10-27. Which of the following personnel monitors or directs the pilot in the final approach to the ship?

1. Air traffic controller
2. Air officer
3. Recovery officer
4. Landing signal officer

10-28. What system provides continuous glide path information and places major control of the aircraft in the hands of the pilot?

1. Air traffic control radar
2. Frensel Lens Optical Landing System (FLOLS)
3. Aircraft Automatic Landing System (AALS)
4. Manually Operated Visual Landing System (MOVLAS)

10-29. When an aircraft fails to hook on an arresting gear cable and is required to enter the traffic pattern again, the action is known by what term?

1. Wave-off
2. Miss
3. Bolter
4. Skip

10-30. What method is used to release the arresting cable from the aircraft tailhook if the cable does not fall free normally?

1. Pull the aircraft backwards
2. Disconnect the tailhook
3. Turn the aircraft
4. Disconnect the cable

10-31. What is the name of the alternating red and white striped line that runs the length of the flight deck?

1. Center line
2. Landing lineup line
3. Lubber line
4. Foul line

10-32. What is used to recover aircraft that cannot make a normal arrested landing?

1. Barricade
2. Parachute
3. Pendant
4. Cables

10-33. What division works in conjunction with the V-2 division in the initial preparation of the barricade?

1. V-1 division
2. V-3 division
3. V-4 division

10-34. What aircraft director hand signal is mandatory at all times?

1. Emergency stop
2. Takeoff
3. Landing
4. Fold wings

IN ANSWERING QUESTIONS 10-35 AND 10-36, REFER TO FIGURE 10-4 (SHEETS 1 THROUGH 16).

10-35. When the director gives the hand signal "Arms crossed above the head, palms facing forward," which of the following signals is he/she giving?

1. "This way"
2. "Slow down"
3. "Stop"
4. "Brakes (on/off)"

10-36. When the director gives the hand signal "Point right arm downward, left arm is repeatedly moved upward and backward," which of the following signals is he/she giving?

1. "Turn right"
2. "Turn left"
3. "Proceed to next director"
4. "Clear for takeoff"

10-37. During night operations, what instruments are used by directors for taxiing signals?

1. Handheld radios
2. Beacons
3. Wands
4. Chemical light sticks

10-38. At what intervals are the aircraft directors usually positioned along the flight deck during operations that require taxiing of aircraft?

1. 5 to 10 ft
2. 20 to 40 ft
3. 50 to 100 ft
4. 100 to 200 ft

10-39. What class of ships embarks vertical, short takeoff and landing (V/STOL) aircraft?

1. LHD
2. LHA
3. LPH
4. Each of the above

10-40. For which of the following reasons are aircraft secured by chocks and chains at all times when aboard ship?

1. Because heavy seas make the ship pitch and roll
2. Because of the list of the ship caused by maneuvering
3. Because of the close proximity of the aircraft on the flight deck and hangar bay
4. Each of the above

IN ANSWERING QUESTIONS 10-41 AND 10-42, REFER TO TABLE 10-2 IN THE TEXT.

10-41. What color wands are used by aircraft directors during night operations?

1. White
2. Amber
3. Blue
4. Green

10-42. What color wands are used by plane captains during night operations?

1. Amber
2. Red
3. White
4. Blue

10-43. For what reason should aircraft wheel chocks be loosened during fueling operations?

1. They will be difficult to remove because of the added weight
2. A snug fit is not required during fueling
3. The chocks can be removed quickly if an emergency occurs
4. Because the tie-down chains will not prevent the aircraft from moving

10-44. Which of the following attachments are installed on the flight deck and hangar bay for the attachment of tie-down chain assemblies?

1. Anchor points
2. Scuppers
3. Pad eyes
4. Tie downs

10-45. When you secure aircraft in heavy weather, how will the procedures differ from that of normal weather conditions?

1. The aircraft are parked further apart
2. More tie-down chains are used
3. The security watch is doubled
4. The brake rider remains in the cockpit

10-46. Which department is responsible for maintaining a security/integrity watch on the flight deck and hangar bay to ensure all aircraft remain properly secured?

1. Operations department
2. Security department
3. Deck department
4. Air department

10-47. In severe cold weather environments, aircraft canopies should not be locked in the landing area because they will freeze "closed" and prevent brake rider protection.

1. True
2. False

10-48. What is the most common type of aircraft wheel chocks used aboard aircraft carriers?

1. The NWC-3
2. Model 1509AS300-1
3. The NWC-4 and NWC-5
4. Model 1509AS300-5

10-49. What are the two available lengths of the TD-1A and TD-1B tie-down chain assemblies?

1. 5 and 10 ft
2. 9 and 14 ft
3. 10 and 15 ft
4. 20 and 25 ft

10-50. What is the working load of the Aero full power tie-down assembly?

1. 10,000 pounds
2. 20,000 pounds
3. 30,000 pounds
4. 40,000 pounds

10-51. How many general classes of tow bars are used in naval aviation?

1. One
2. Two
3. Three
4. Four

10-52. What is the weight towing capacity of the universal aircraft tow bar, Model ALBAR (adjustable length tow bar)?

1. 60,000 pounds
2. 70,000 pounds
3. 80,000 pounds
4. 90,000 pounds

10-53. Who is responsible at all times for the safety of embarked aircraft and personnel aboard ship?

1. Commanding officer
2. Air officer
3. Safety officer
4. Operations officer

10-54. What term is used when the flight deck has unauthorized personnel in or around aircraft parked in the safe-parking area aft of the island?

1. Dirty
2. Foul
3. Secured
4. Skunk

10-55. While taxiing the aircraft, what must the pilot do if he/she loses sight of the director?

1. Contact the tower
2. Continue to the next director
3. Stop immediately
4. Continue taxiing and wait for instructions

10-56. If an aircraft with inoperative brakes is to be towed and respotted, the cockpit must NOT be manned, and the chockman must be in position to chock the main wheels instantly when ordered.

1. True
2. False

10-57. When squadron aircraft are shore based, the area where a group of aircraft is spotted or parked is referred to as

1. the parking area
2. the ramp
3. the line
4. the hole

10-58. Which of the following personnel has the responsibility to direct and spot aircraft ashore?

1. Maintenance crew
2. Phase crew
3. Operations crew
4. Line crew

10-59. Upon landing ashore and clearing the runway, the pilot will be assisted to the line for parking by what means?

1. An aircraft director
2. A "follow me" vehicle
3. The control tower
4. A tow tractor

10-60. What method is used to distinguish flight line fire extinguishers from building fire-fighting equipment?

1. The size of container
2. 6-inch black letters
3. Color codes
4. Length of hose

10-61. What color is the 6-inch band around the top of a fire extinguisher on the line painted to identify carbon dioxide (CO_2)?

1. Yellow
2. Silver or white
3. Purple
4. Blue

10-62. What color is the 6-inch band around the top of a fire extinguisher on the flight line painted to identify Halon?

1. Blue
2. Silver or white
3. Purple
4. Fluorescent yellow

10-63. What is a disadvantage of a multiengine aircraft equipped with nosewheel steering?

1. It limits the turning radius
2. It is unable to back up in a straight line
3. It increases the turning radius
4. It has to be parked using a tow tractor

10-64. What signal is given by the move director to have the brakes of the aircraft and tow tractor applied simultaneously in case of an emergency?

1. Waving arms above head
2. Blowing a whistle
3. Yelling, "stop"
4. Arms above head, clinched fists

10-65. What aircraft safety equipment should be installed before the aircraft is towed?

1. Engine intake covers
2. Grounding straps
3. Control surface battens
4. Landing gear safety lockpins

10-66. What, if anything, will occur if an aircraft nosewheel is turned beyond its limits while towing?

1. Structural damage will occur
2. The nosewheel tire will be damaged
3. The landing gear strut will collapse
4. Nothing, this is a common procedure

10-67. Why should you leave sufficient slack in the line when securing an aircraft with manila line?

1. To prevent damage to the tie-down points during wind gusts
2. To make it easier to untie the knots
3. To prevent structural damage to the wings
4. To allow for shrinkage that occurs when the line becomes wet

10-68. Multiengine aircraft are usually tied down at six points.

1. True
2. False

10-69. Which of the following helicopter hand signals is mandatory?

1. Wave-off only
2. Hold only
3. Wave-off and hold
4. Hover

10-70. What is the name of the director that is responsible for visually signaling to the helicopter?

1. Landing signal enlisted (LSE)
2. Landing signal officer (LSO)
3. Signalman
4. Flight deck leading petty officer

IN ANSWERING QUESTIONS 10-71 AND 10-72, REFER TO FIGURE 10-16 (SHEETS 1 THROUGH 11).

10-71. When the director gives the hand signal "Arms extended horizontally sideways, palms downward," which of the following signals is he/she giving?

1. Hover
2. Land
3. Move downward
4. Move upward

10-72. When the director gives the hand signal "A circular motion in horizontal plane with right hand above head," which of the following signals is he/she giving?

1. Lower wheels
2. Engage rotors
3. Clear for takeoff
4. Engine fire

10-73. Helicopters should NEVER be taxiied on the flight deck of a ship.

1. True
2. False

10-74. What color light is displayed from the flight deck rotary beacon that indicates the ship is ready for the pilot to engage rotors?

1. Red
2. Green
3. Amber
4. White

CHAPTER 11

AIRCREW SURVIVAL EQUIPMENT

INTRODUCTION

Emergency conditions arise quickly and leave little or no time for preparation. You must know what survival equipment is available and how to use it before the need arises.

You can receive aircrew survival training in a number of places. The first place is the aviator's equipment shop, commonly called the "parachute loft" or just the "paraloft." There you will meet the personnel that rig, pack, inspect, and maintain all Navy survival equipment. These personnel are members of the Aircrew Survival Equipmentman rating, and are commonly called "parachute riggers." In the parachute loft, you can get first-hand information on the different items that are covered in this chapter.

The next place is in Flight Physiology. There you will find the medical people who are responsible for survival training. You may have an opportunity to see or even take a ride in the pressure chamber. The pressure chamber allows you to use oxygen equipment under the atmospheric pressure conditions encountered at high altitudes, and to see how your body reacts to those changes.

The multiplace egress device is used in many areas. This device is used to simulate the problems involved in ditching an aircraft at sea, day or night. This training teaches you how to escape from a sinking aircraft and how to use inflatable life rafts and life preservers.

FLIGHT CLOTHING

LEARNING OBJECTIVE: Identify the types, characteristics, and uses of flight clothing.

Naval aircrew protective equipment is designed to meet the extreme stresses of a combat environment. It also provides fire protection, camouflage, and has design features for escape and evasion. The wide range of environmental conditions in which aircraft must operate requires a compromise between comfort and the high level of protection needed. Protection is the first priority. Postcrash fire and cold water exposure are two critical areas where the survival requirements are more important than maintaining the best cockpit flying conditions. Flight clothing is designed to minimize injury from these hazards.

Aircrew personal protective equipment, such as flight clothing, plays an important role in the safety and survival of pilots and aircrewmen. It protects personnel from the elements and provides adequate comfort for efficient mission performance. The primary purpose of flight clothing and equipment is to protect you from a variety of hazards. No single item of clothing or equipment can cover all the potential requirements. The Navy uses both general flight gear and specialized protective equipment for protection and comfort in cold and hot climates. General flight gear consists of flight coveralls, boots, gloves, etc.; specialized protective equipment consists of anti-g protection coveralls and antiexposure equipment.

FLIGHT COVERALLS (SUMMER WEIGHT)

The summer weight flight coverall (fig. 11-1), which comes in two colors (sage green and blue), is a one-piece suit made from Aramid cloth. Aramid cloth is a high-temperature resistant, flame retardant, and nonabsorbent synthetic fabric commonly called Nomex. The fabric is lightweight and does not burn, but it begins to char at 700° to 800°F. The suit is fitted by size, easy to put on, has ample pocket space, and is wash and wear.

FLIGHT COVERALLS (COLD WEATHER)

The cold weather flight coverall is a one-piece lined coverall similar to the summer-weight flight suit. The outer layer is a fire–resistant aramid twill with an inner layer of aramid microfiber thermal insulation. The coverall is sized and belted, has a concealed hood in the collar, has ample pocket space, and is wash and wear. The coverall has adjustable sleeve cuffs, front closure and leg zippers make it easy to get in to and provide a snug fit. The coverall is available in 24 sizes and may be worn instead of the summer flight suit when conditions warrant.

FLIGHT BOOTS

Flight boots are designed to protect your feet from high impact forces, such as crushing or piercing. The boots are water resistant.

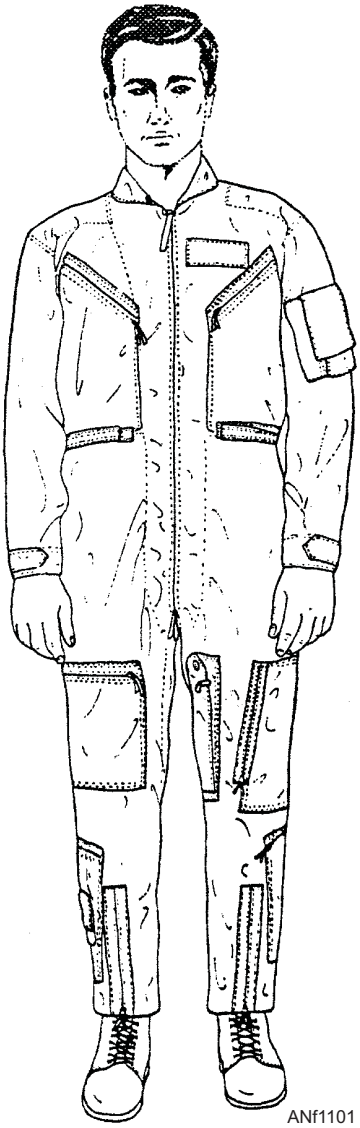

Figure 11-1.—Summer flight coverall.

The upper boot is constructed of black, high-quality calfskin or cattlehide and is lined with soft, full-grain cattlehide glove leather. The boot is 8 inches high when fully laced, and is available in normal shoe sizes. The traction tread soles and heels are made of nonslip, nonmarking, jet-fuel-resistant rubber. The steel box toe is constructed of cold-rolled carbon steel to provide safety through greater compression resistance.

FLIGHT GLOVES

The fire-resistant flight gloves provide protection in the event of fire in the aircraft. The flight gloves are snug fitting to allow maximum finger movement and sense of touch. The gloves do not interfere with operation of the aircraft or use of survival equipment. The gloves are constructed of soft gray cabretta leather and a stretchable, sage green, Aramid (Nomex) fabric. The fabric (top) portion of the glove does not melt and will not support combustion. The leather palm and finger portions of the glove provide a nonslip surface even when wet.

HELMETS

The type of aircraft you are in dictates whether or not you have to wear a protective helmet. Fighters, attack planes, and helicopters usually require you to wear a protective helmet throughout all flight operations. Other aircraft may require you to wear a helmet only during takeoffs and landings.

The helmet is part of a pilot's protective equipment. Maintenance and upkeep is the responsibility of the Aircrew Survival Equipmentman. There are several different types of helmets. Each has its own specific function. Some types of helmets can be changed or modified to meet certain requirements for specific aircraft and mission. The HGU series helmets are discussed in the following text.

The HGU–68(V)/P series helmets (fig. 11-2) are designed for all tactical fixed-wing aircraft applications. They are lightweight and provide face, eye, hearing, and head protection when properly assembled and fitted to the person. The helmet assembly houses the visor, liner, and communications headset. Some

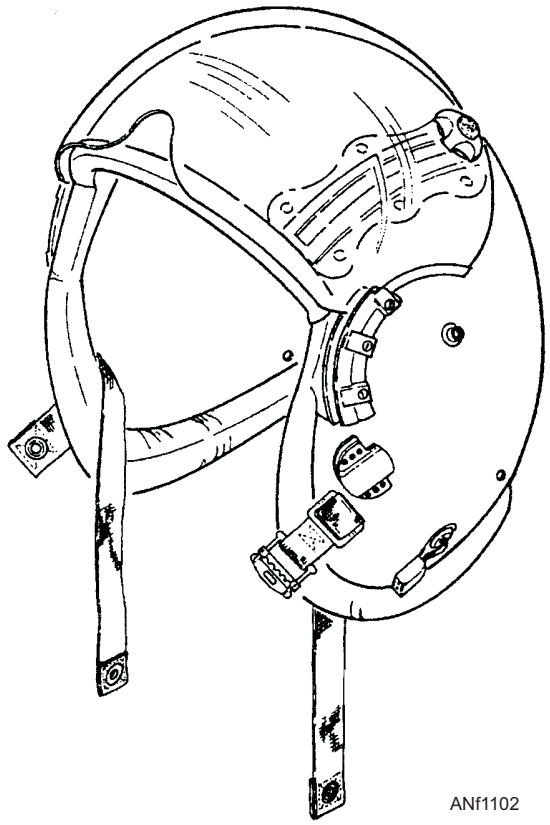

Figure 11-2.—HGU-68(V)/P helmet assembly.

helmets have specialized features, such as the Visual Target Acquisition System (VTAS), Night Vision Goggle (NVG) assemblies, laser protective lenses, sonar operator binaural cables, and boom microphones.

The HGU–84/P series helmet (fig. 11-3) is designated for used by all helicopter aircrew members. Helmet assemblies feature a lightweight shell constructed of a multi–layer mixed composite of graphite fabric and ballistic nylon fabric, an inner foam liner, three integrated visor assemblies (Neutral, Clear, and Laser Eye Protective), communication cord set, boom microphone, earphones, and a integrated chin/nape strap. The helmet provides maximum face, eye, ear and head protection and comfort when properly fitted to the wearer. The HGU–84/P helmet is available in four sizes, (M, LG, XLG, XLG wide) and can also be fitted with specialized features for aircraft or mission.

ANTI-G COVERALLS

When in flight, the body can have trouble adjusting to stresses produced by rapid changing of speed or direction. In situations such as seat ejection, ditching, or parachute opening shock, the short duration of the excessive force has little effect on the body. However, changing the direction of flight produces stress forces equal to several times the normal pull of gravity for much longer periods of time. These longer duration forces can have dangerous effects.

At 5 g's (5 times the force of gravity), the aircrewman's body is exposed to a force that increases its weight 5 times. This increased weight has many effects. Your body is pushed down into your seat. Your arms and legs feel like lead, and operation of equipment becomes more difficult. The extra weight on your internal organs causes stomach and chest pain. Most important, however, is the effect on your circulatory system.

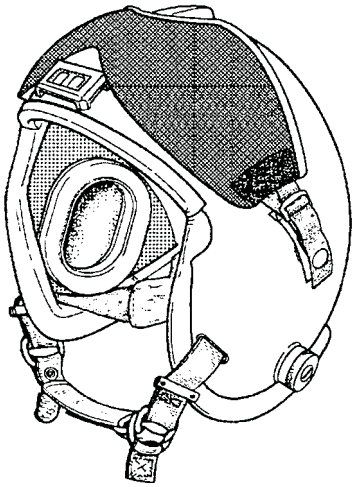

ANf1103

Figure 11-3.—HGU–84/P series helmet.

At 5 g's, your heart cannot pump enough blood to your head. When this happens, you will pass out. Wearing anti-g coveralls will help prevent this from happening.

The Navy uses two models of anti-g coveralls (commonly called "G" suits). These coveralls provide protection against blacking out, loss of vision, and lowered mental efficiency caused by high g-forces experienced in high-performance aircraft. Figure 11-4 shows a typical anti-g coverall.

Anti-g coveralls compress your legs and stomach to prevent blood from pooling in your lower body. This increases your stress tolerance an average of about 2 g's. Without an anti-g coverall, you may be able to withstand about 4.5 to 5.5 g's without losing vision or blacking out. With a coverall, you can withstand 6.0 to 7.0 g's. This protection is available only for sustained accelerations of 4 to 5 seconds. Anti-g equipment does not offer protection in snap maneuvers where 10 to 12 g's are applied in about 1 second. Such extreme forces for a short time are not as harmful to the body as are lesser forces sustained for a longer time.

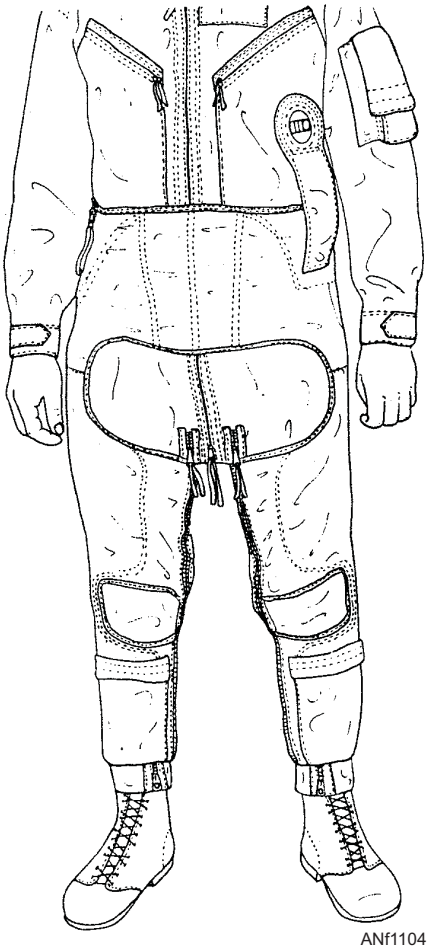

ANf1104

Figure 11-4.—Cutaway anti-g coverall.

ANTIEXPOSURE COVERALL

Antiexposure coveralls are composed of several garments that protect you against exposure in cold water. The two main coveralls are the constant-wear and the quick-donning. The constant-wear suit consists of a waterproof outer garment worn over a ventilation liner and/or cold weather underwear. Constant-wear coveralls provide additional protection from cold temperatures.

The quick-donning antiexposure coverall is carried in the aircraft and donned only in case of emergency. It consists of a waterproof outer garment equipped with permanently attached boots and wrist and neck seals. An inflatable hood and antiexposure mittens are stowed in the pockets. In case of emergency, the coverall is donned over the regular flight clothing (fig. 11-5).

Either the continuous-wear or quick-donning antiexposure coverall is provided for flight personnel and passengers when there is a significant risk of crashing in the water, and when any of the following conditions exist:

1. The water temperature is 50°F or below.

2. The outside air temperature (OAT) is 32°F (wind chill factor corrected) or below.

If the water temperature is between 50° and 60°F, the commanding officer of the unit concerned considers the following search and rescue (SAR) factors to determine if antiexposure coveralls should be worn:

1. The maximum probable rescue time. This should be a function of mission distance, SAR equipment, and SAR location.

2. The lowest temperatures that will occur in the mission area during the time period of the flight.

When water temperature is below 60°F and antiexposure coveralls are not required, the flight equipment must include antiexposure and high-

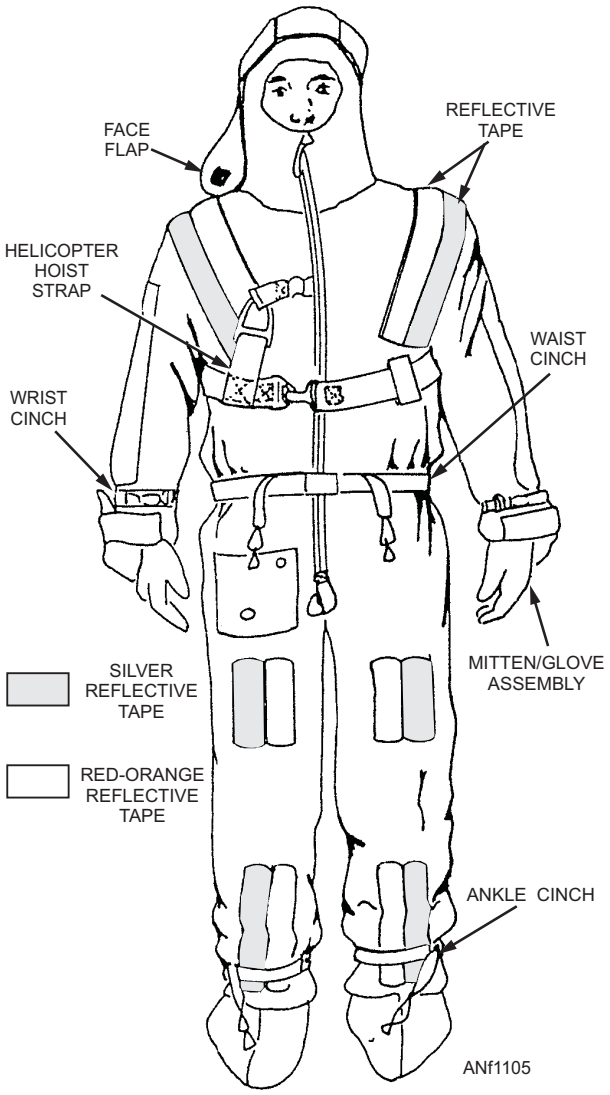

Figure 11-5.—Quick-donning antiexposure coverall.

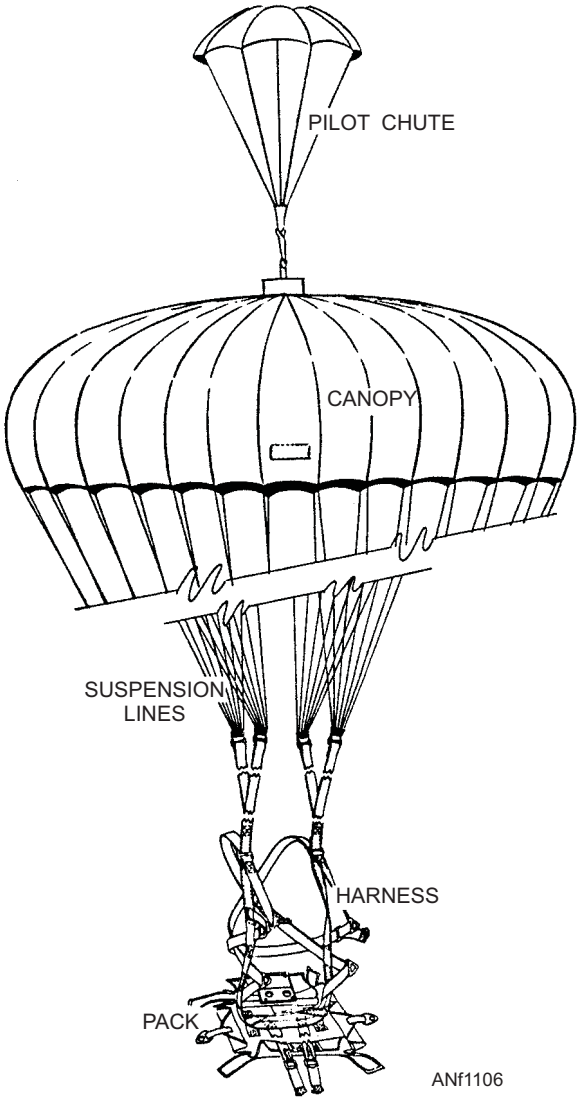

Figure 11-6.—Five major components of a Navy parachute.

temperature resistant undergarments. Wearing double layers of these undergarments can significantly improve your antiexposure protection.

Q11-1. What is the primary purpose of flight clothing and equipment?

Q11-2. What type of helmet is designed for use by helicopter aircrews?

Q11-3. What is the purpose of the anti-g coverall suit?

PARACHUTES

LEARNING OBJECTIVE: Identify the types, characteristics, and basic operating procedures for Navy parachutes.

A parachute consists of five major parts—the harness, container, suspension lines, canopy, and pilot chute (fig. 11-6). The harness is an arrangement of nylon webbing and metal fittings. It is designed to hold the parachute securely to the wearer and provide a seat or sling during descent. The container encloses the pilot chute, canopy, and suspension lines. The suspension lines are made of nylon and join the canopy to the harness. The canopy is a large round area of cloth that, when inflated, slows the descent of a falling body. The pilot chute is a small parachute attached to the top of the canopy. When the ripcord is pulled, the pilot chute deploys and helps deploy the main canopy and suspension lines.

There are three basic types of Navy parachutes—the Navy back (NB), the Navy chest (NC), and the Navy ejection system (NES).

The NB and NC parachutes are used in aircraft that do not have ejection seat systems. The NES is used in ejection seat aircraft.

NES PARACHUTE

The NES parachute assembly (fig. 11-7) is used only with ejection seat equipped aircraft. The assembly is equipped with a 28-foot canopy. The canopy is

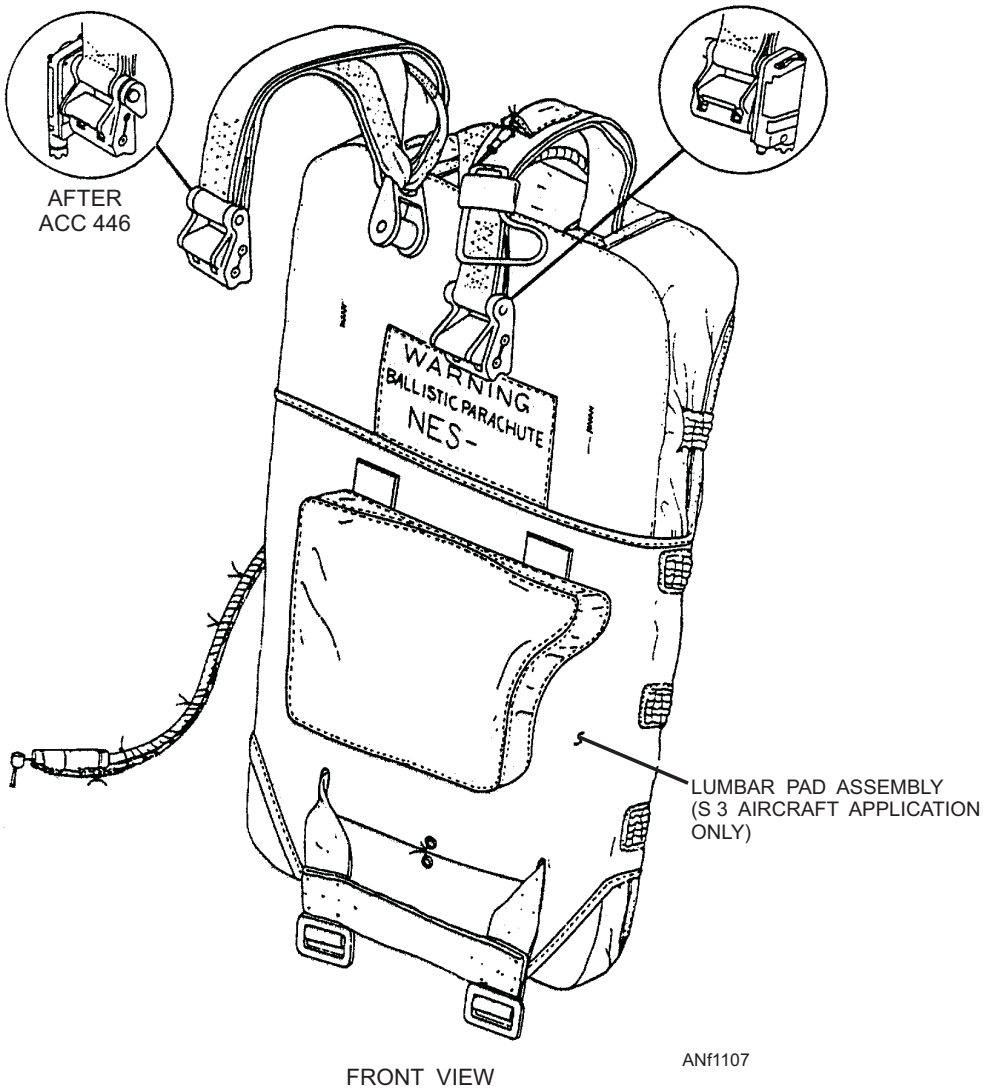

Figure 11-7.—Personnel Parachute Assembly, NES-12.

attached to the aircrewman by lift webs connected to a torso harness. This torso harness is part of the shoulder harness restraint system. The restraint system is part of the ejection seat emergency egress system.

Upon ejection, there are two methods for deploying the parachute. One ejection method is for seats to use explosive cartridge-actuated projectiles to withdraw and deploy the parachute. The other way is for seats to trip an automatic parachute opening device when the ejection sequence separates the occupant from the ejection seat.

The automatic opening device pulls the ripcord pins, which releases the pilot parachute. The pilot parachute, in turn, pulls the main canopy and suspension lines from the container. When full stretch of the suspension lines is attained, a spreading gun attached to the hem of the canopy explodes. The explosion fires 14 projectiles in a centrifugal pattern, which accelerates the parachute opening.

PARACHUTE HARNESSES

A parachute harness secures the parachute to the wearer and provides support during the opening shock and descent. The harnesses used by the Navy are the standard quick-fit (used with the NB and NC parachutes) and the integrated torso harness suit (used with the NES parachute).

There are two types of standard quick-fit harness—the back type (NB) and the chest type (NC). The NB type consists of a main sling, lift webs, leg straps, a horizontal back strap, a diagonal back strap, and a chest strap combined into one unit. The lift webs are the attaching points where the parachute suspension lines are attached to the parachute canopy.

The chest type consists of the same components as those of the back parachute. The difference between the chest and the back harness is that the lift webs of the chest harness may be connected to or disconnected from the main sling. This allows you to remove the chest parachute while wearing the parachute harness.

The Integrated Torso Harness Suit

The integrated torso harness suit (fig. 11-8) contains the parachute harness, lap belt assembly, and shoulder restraint harness. The suit provides mobility while restraining the wearer to the seat during emergency conditions. It also serves as a parachute harness during an aircraft ejection.

The suit consists of a nylon webbing harness encased in nylon fabric. It is a sleeveless, legless, torso garment. Shoulder restraint adjustable straps with quick-release fittings are for attachment of an NES parachute assembly. A lap belt and quick-release adapter are attached to the lap belt alignment webbing. The lap belt assembly is used to attach a survival kit. A webbing belt at the waist area is used to attach a life preserver if the survival vest is not used. A zipper located in the front closes the suit. An adjustable chest strap provides for the final chest adjustment. The strap is secured by a friction adapter and hook-and-pile tape (Velcro). A gated D-ring is attached to the right shoulder adjustable strap near the quick-release fitting. The D-ring is used to attach a helicopter rescue hook.

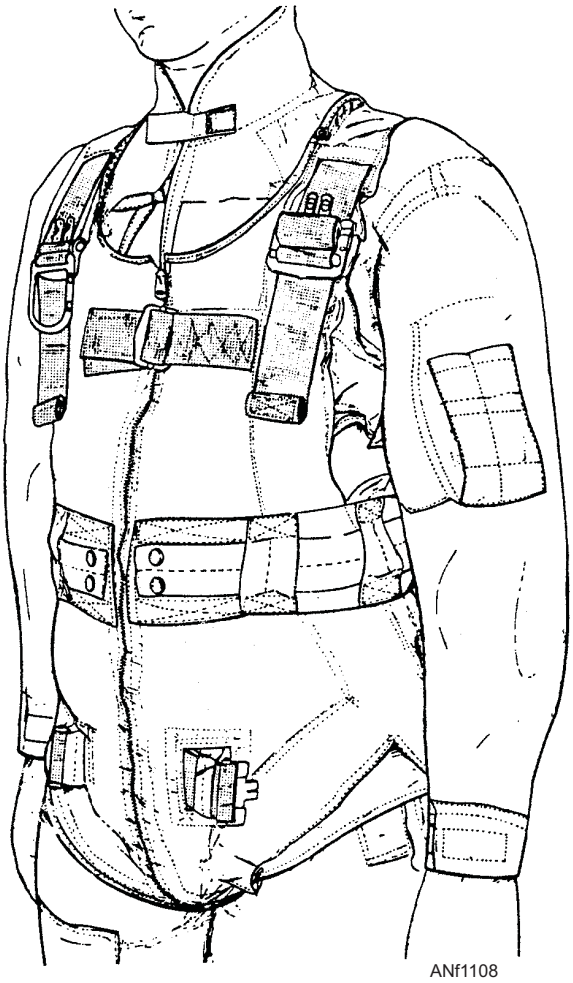

Figure 11-8.—Torso harness suit.

Parachute Container

The parachute container holds and protects the pilot chute, main canopy, and suspension lines. There are many container designs. Each design is unique to its specific aircraft egress system. Containers are either made from nylon fabric or a contoured plastic frame enclosed in a nylon cover.

Suspension Lines

Suspension lines are the lines that connect the parachute canopy to the parachute harness. The suspension lines form a net or skeleton for the canopy. This skeleton absorbs much of the parachute opening shock. Suspension lines are made of nylon and are used on all main canopies. Suspension lines consist of an outer covering and several inner cords called the core. The core provides the greater portion of the strength of the suspension lines. The suspension lines run continuously between connector links on either side of the canopy.

Canopy

The 28-foot, rip-stop nylon parachute canopy (fig. 11-9) is commonly used in Navy parachutes. The canopy has 28 sides and a diameter of 28 feet. Each side is called a gore and is made up of four sections of fabric.

This parachute has the following characteristics:

- Each gore section is identified by the letters A, B, C, and D, starting with the bottom section.
- Each section is cut at a 45-degree angle to the center line of the gore. This is called "bias construction," and it provides maximum strength and elasticity.
- The suspension lines are enclosed in the channel produced by the stitches of the radial seams.
- A vent opening in the top of the parachute acts as a relief valve and relieves the high internal pressure within the parachute at the instant of opening. Without this vent, an opening at high speed could tear the canopy.
- The canopy is manufactured in four colored sections of fabric to aid a downed crewman in either concealing or signaling his location. The four colors are white, orange, tan, and green.

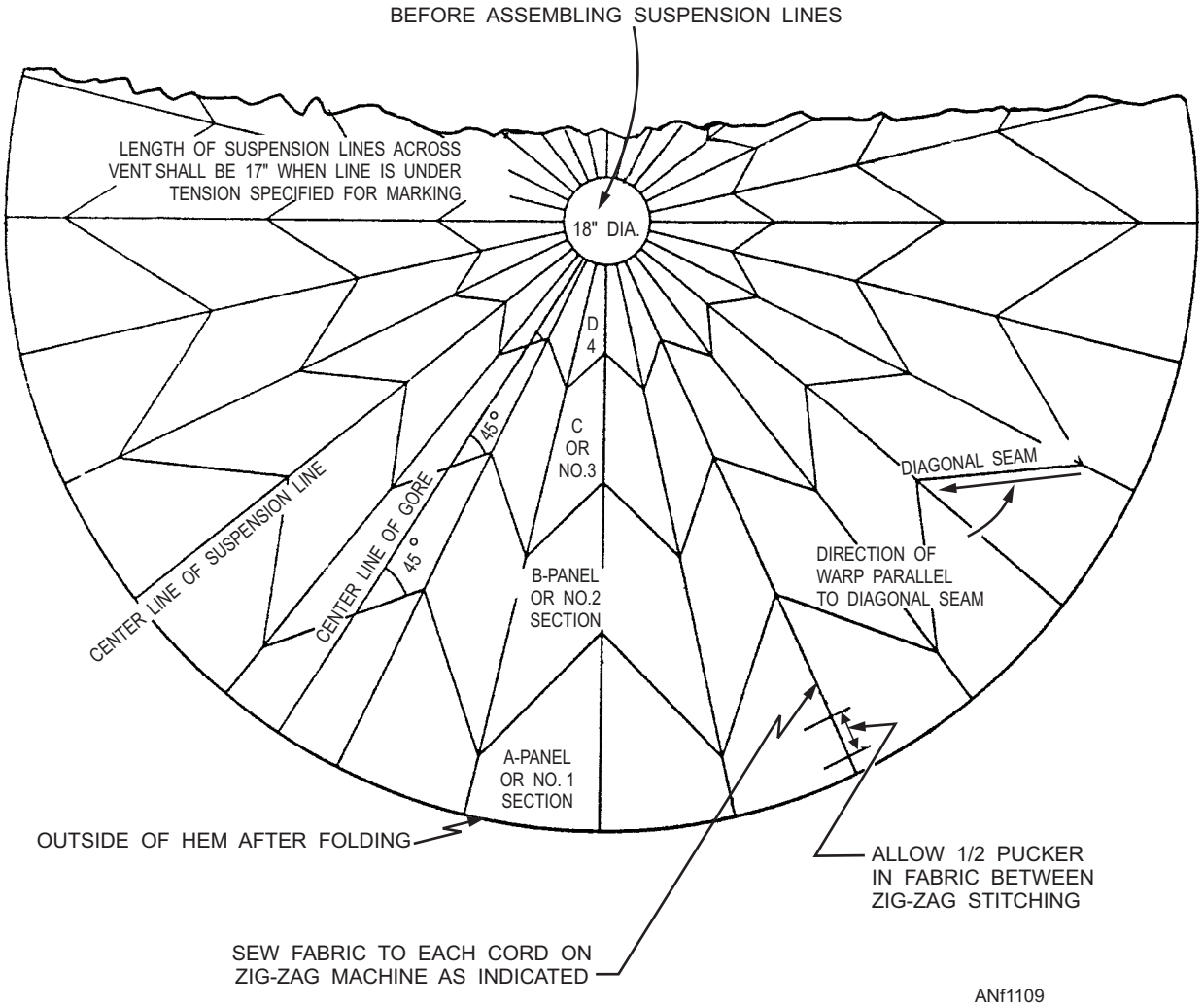

Figure 11-9.—The 28-foot ripstop canopy.

Pilot Chute

The purpose of the pilot chute is to help deploy the main parachute. The vane-type pilot chute (fig. 11-10) is a small spring-loaded chute. It is held in a compressed state by the closing feature of the parachute container. When released from the container, the coil spring will eject the pilot chute into the airstream. The pilot chute canopy inflates and pulls the main parachute canopy and suspension lines from the container.

PARACHUTE HANDLING AND CARE

Anyone whose life has been saved by using a parachute needs no motivation when it comes to taking care of parachutes. Parachutes may seem cumbersome at times, but their bulk should serve as a reminder to those who handle them that the parachute is a lifesaving instrument. The following is a list of handling precautions designed to guide you in the proper ways of caring for a parachute.

1. Do not carry a parachute by its ripcord handle or the lift webs.

2. Keep actuating lanyards for cartridge-actuating devices well protected.

3. Keep parachutes dry and away from all sources of moisture.

4. Keep parachutes away from extreme heat, such as heaters or radiators.

5. Do not drop a parachute.

6. Do not step on a parachute.

7. Keep parachutes clean. Protect them from contact with oil, grease, dirt, acids, and other destructive elements. Acids of any kind, even in weak solutions, are extremely harmful to fabrics. Spillage from aircraft storage batteries often contaminates areas of the deck. This harmful condition has many ways of being transmitted to a parachute. Report immediately any discrepancy noted on the exterior of a parachute.

WARNING

Never hide or attempt to rearrange webbings, material, or actuating lanyards that are disarranged by careless handling. The life you save by reporting these discrepancies might be your own.

Q11-4. What are the three basic types of navy parachutes?

Q11-5. What secures the parachute to the wearer?

Q11-6. Which parachute harness has a gated D-ring attached for helicopter rescue?

Q11-7. What is the purpose of a pilot chute?

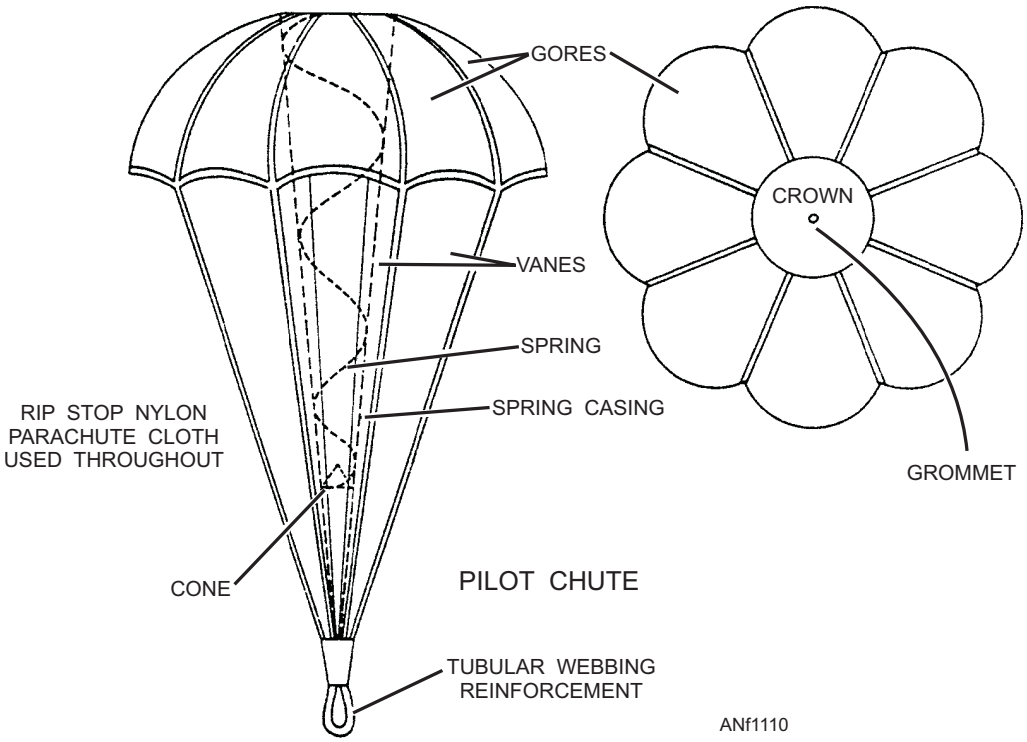

Figure 11-10.—Vane-type pilot chute.

LIFE PRESERVERS

LEARNING OBJECTIVE: Identify types of life preservers and associated survival equipment.

Life preservers are worn by personnel on overwater flights and by flight deck personnel. The life preservers function is to keep you afloat until you can reach a raft or until a rescue team arrives. To prevent malfunction, you must have proper inspection, maintenance, and handling of life preservers.

Life preservers are safe, comfortable, and easy to wear. They provide enough buoyancy to support you if you have to bail out, ditch from an aircraft, or fall off the ship into the water. Life preservers are rapidly inflated with a compressed CO_2 cartridge. If this fails, they also have an oral inflation device. Accessory survival items may be attached, depending upon the type of preserver.

You must be familiar with the donning, fitting, care, and operation of your life preserver. If you have to eject or ditch, you may spend several minutes or several days in the water. A properly inflated preserver will help you to survive. When you are rescued or reach your raft, keep the life preserver on and inflated in case the raft capsizes or deflates.

LIFE PRESERVER PASSENGER (LPP)

The LPP assembly (fig. 11-11) is used by combat helicopter crews and passengers. The assembly consists of a single-compartment yoke-type flotation

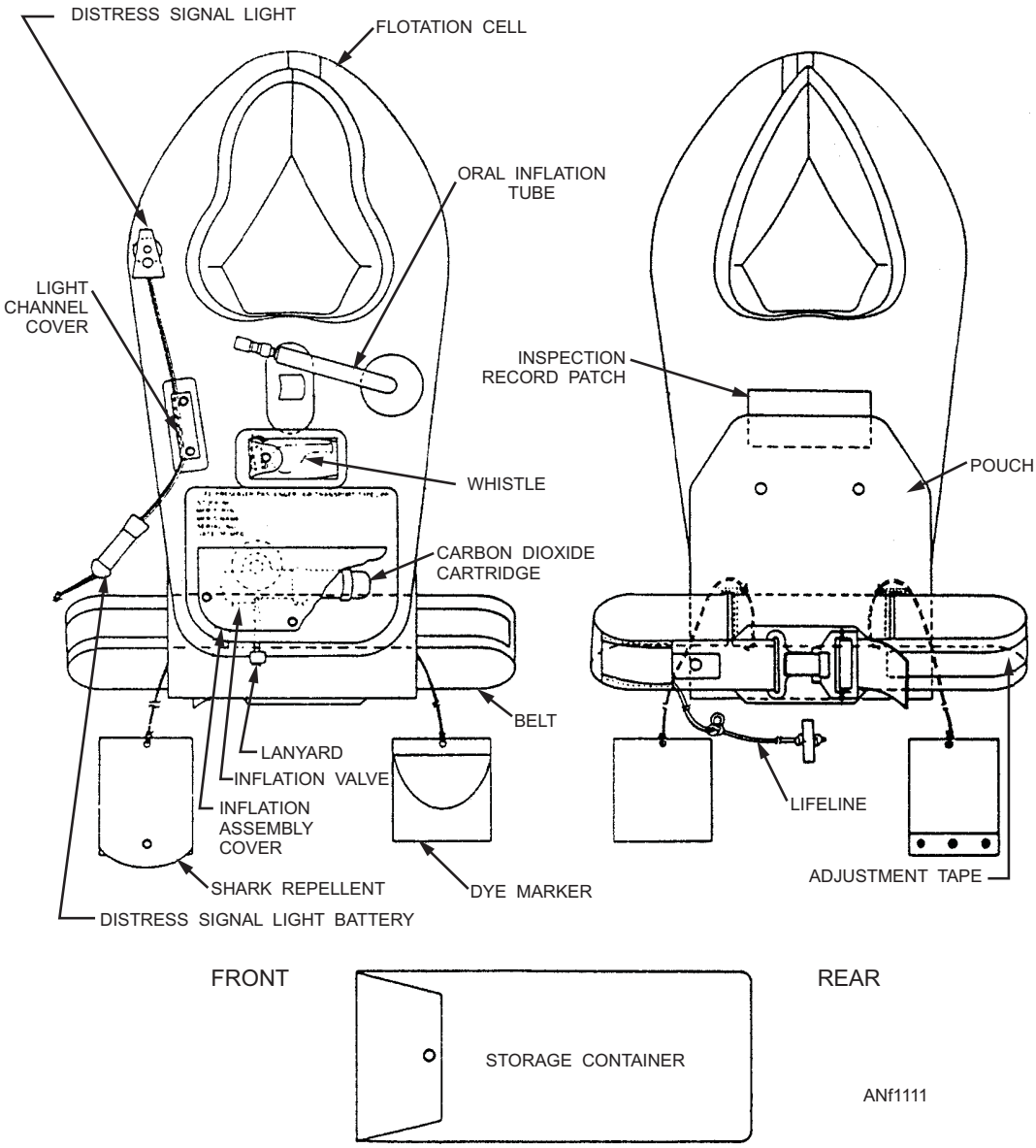

Figure 11-11.—LPP assembly.

bladder, a pouch and belt assembly, a toggle assembly, a CO_2 inflation assembly, an oral inflation tube assembly, and a storage container.

Floatation Assembly

The flotation assembly is constructed of polychloroprene-coated nylon cloth. It has an oral inflation tube, a whistle pocket, and a belt loop.

Pouch and Belt Assembly

The pouch and belt assembly consists of a rubber-coated nylon cloth pouch and an adjustable belt. The pouch contains the flotation assembly and the survival items. The belt consists of a 53-inch piece of webbing, an adjustable buckle and clasp, a toggle assembly, and a toggle assembly pocket. The belt attaches the flotation assembly and pouch to the wearer.

Toggle Assembly

The toggle assembly consists of a wooden toggle and line. The toggle assembly is used to secure survivors together while they are in the water.

Inflation Assembly

The LPP inflation assembly consists of a CO_2 cartridge and an inflation valve. The inflation assembly is connected to the valve stem on the front of the flotation assembly. The valve stem is equipped with a check valve that prevents leakage.

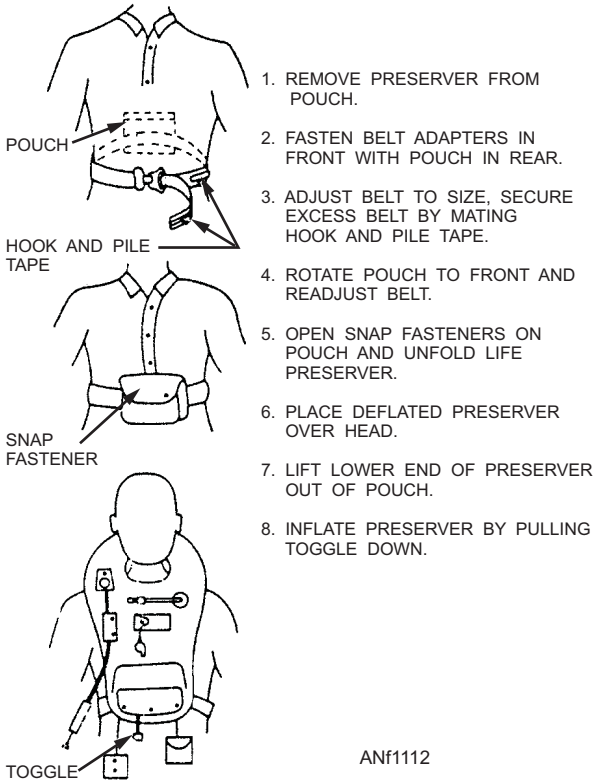

Figure 11-12.—LPP donning procedures.

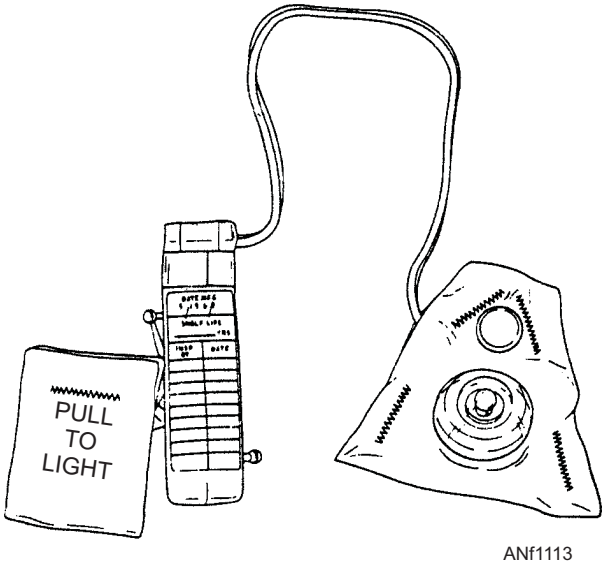

Figure 11-13.—Distress signal light.

Storage Container

The storage container is used to store the life preserver assembly when it is not in use. The storage container has donning instructions printed on it. For an example of these instructions, refer to figure 11-12.

Survival Items

The following survival items are provided with the LPP.

WHISTLE. The signaling whistle is used to attract the attention of rescue ships or personnel in foggy weather or at night.

DISTRESS SIGNAL LIGHT. The distress signal light (fig. 11-13) is water activated. It is used to attract the attention of SAR aircraft, ships, or ground rescue

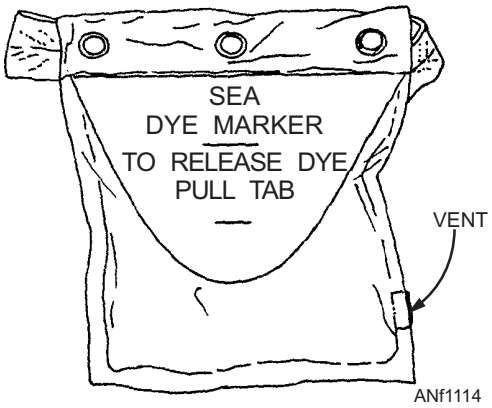

Figure 11-14.—Dye marker.

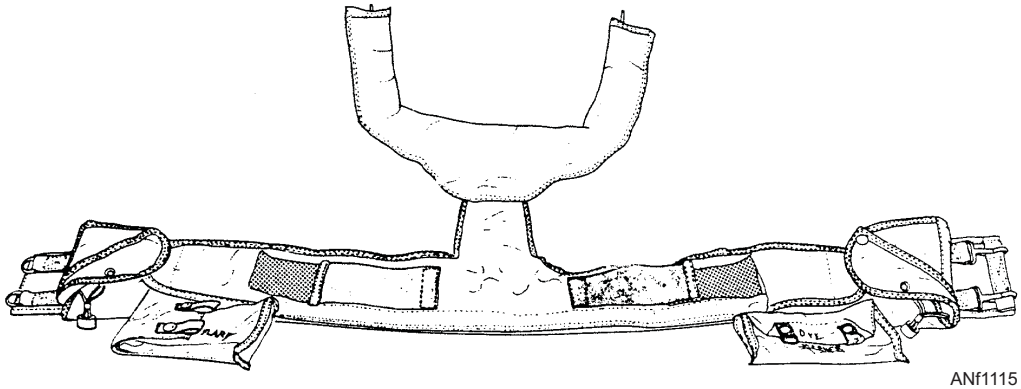

Figure 11-15.—LPU life preserver assembly.

parties. The light emits a constant, high-intensity light that is visible for many miles, and it has an operational life of 8 continuous hours. The light is a small, compact unit consisting of a lens, connector wire, and powerpack. The light is attached near the top right side of the flotation assembly to provide maximum visibility. The powerpack hangs below the light to ensure contact with water. To activate the powerpack, pull the "pull to light" plug.

DYE MARKER. The dye marker (fig. 11-14) is a chemical that turns water brilliant green. It is used to attract the attention of rescue aircraft. The dye stays strongly visible for 20 to 30 minutes and may cease to be a good target after an hour, depending on sea state and ocean current. It is visible at an approximate distance of 11 miles at 3,000 feet altitude. If rapid dispersion of dye is desired, agitate the container in the water. To open the dye marker, grasp the material at the top of the packet between the fingers and the palm of the hand. Tear the pull tab.

LIFE PRESERVER UNIT (LPU)

The LPU assembly (fig. 11-15) is used by naval aircraft crew members. It is designed as a constant-wear item for use with and attached to the SV-2 series survival vest. It will not interfere with removal of the quick-fit parachute harness. The assembly consists of a two-chambered flotation assembly, a casing assembly, and optional survival items and pouches.

Flotation Assembly

The flotation assembly (fig. 11-16) is constructed of polychloroprene-coated nylon cloth and consists of two independent flotation chambers sewn together at the collar. These chambers are inflated by CO_2 inflation assemblies or by the oral inflation tubes on each waist lobe.

Each waist lobe is equipped with an attachment patch used for securing the casing assembly. The right

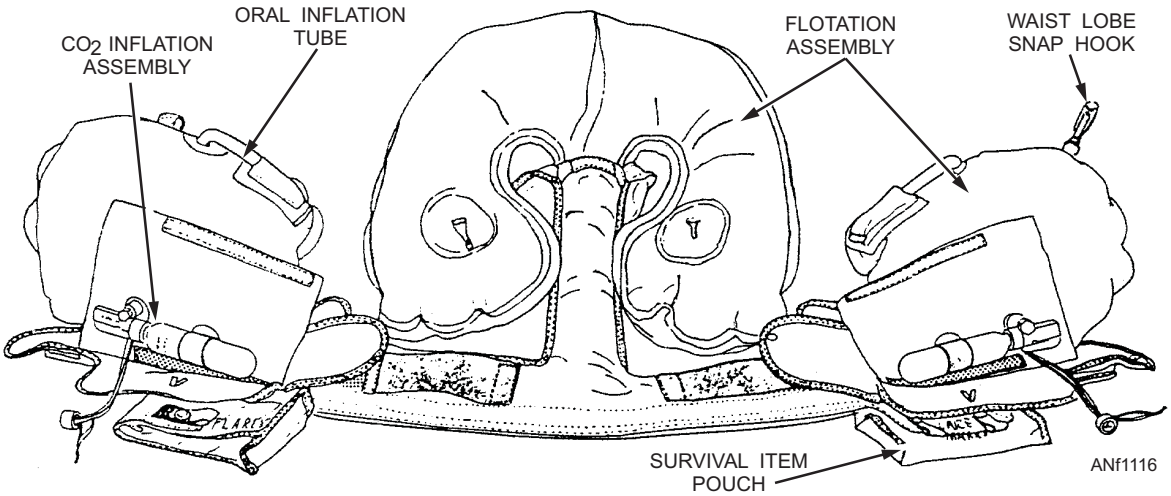

Figure 11-16.—Flotation assembly (inflated).

waist lobe is equipped with a snap hook. The left lobe is equipped with a D-ring. The snap hook and D-ring are used to secure the waist lobes together after inflation. Each collar lobe is equipped with a snap hook for attachment to the survival vest.

Casing Assembly

The casing assembly is constructed of rubber-coated nylon cloth and protects the flotation assembly. The casing assembly consists of the adjustable casing, an adjustable webbing belt, and the front connector assembly. The webbing belt keeper loops retain the webbing belt. They also allow attachment of the survival vest around the wearer's waist.

Survival Item Pouches

The survival item pouches attach to the lower casing assembly with snap hooks. The pouches contain two dye markers and two Mk 13 Mod 0 or the Mk 124 (day/night) distress signal flares. Carrying the survival item pouches is optional; however, when the pouches are not used, the dye markers and flares will be contained in the SV-2 series survival vest.

FLIGHT DECK INFLATABLE LIFE PRESERVER

The flight deck inflatable life preserver (fig. 11-17) is NOT a piece of aviation survival equipment. It must NEVER be substituted for an LPP or LPU life preserver. The flight deck inflatable life preserver is worn by all flight deck, aviation maintenance, and ordnance personnel. This preserver is mandatory flight deck safety equipment.

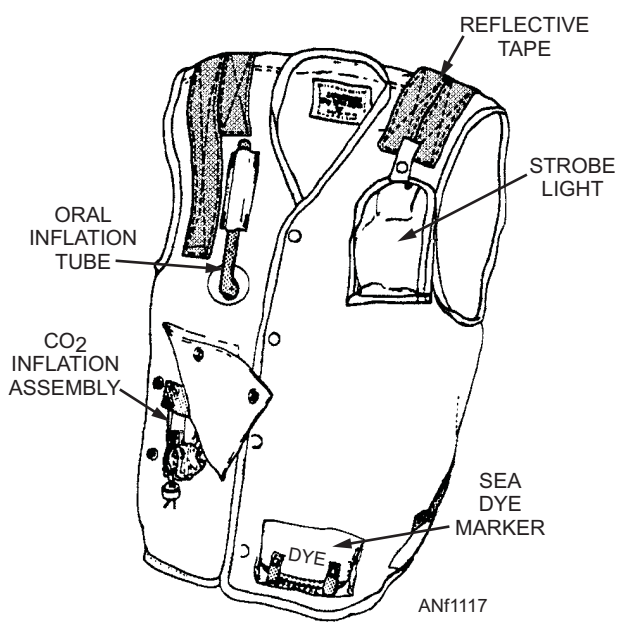

Figure 11-17.—Flight deck life preserver.

The flight deck inflatable life preserver is a two-piece unit that consists of a single-compartment inflatable bladder and a cloth outer garment.

The inflatable bladder is inflated by pulling the toggled lanyard that is attached to a dual CO_2 inflation assembly or by an oral inflation tube. Overinflation is prevented by a pressure-relief valve diaphragm. The bladder will support 29 pounds of buoyancy.

The cloth outer garment is constructed of cotton fabric. It is available in a variety of colors used to identify the carrier/flight deck personnel occupational fields. Cloth reflective tape is sewn to each shoulder area to aid in the location of a wearer at night. Each vest is equipped with pouches that contain a distress light marker, whistle, and sea dye marker.

The shipboard Planned Maintenance System (PMS) contains maintenance and inspection requirements for the flight deck inflatable life preserver.

Q11-8. How many ways can the LPP life preserver be inflated?

Q11-9. How many pounds of buoyancy will the flight deck life preserver support?

Q11-10. What is the purpose of the different colors for the flight deck life preserver?

LIFE RAFTS

LEARNING OBJECTIVE: Identify the types of life rafts and common survival kit items.

Naval aircraft that make operational flights over water are required to carry enough life rafts to carry all the assigned crew plus passengers. Life rafts are manufactured in various sizes and configurations to meet the demands of all types of aircraft.

Pneumatic life rafts are compact assemblies that can be stowed in a small area. They should be stowed so they are easy to get to, preferably near an emergency exit. Never stow a life raft under other equipment or cargo or near batteries. Protect them from sources of heat such as heaters, engines, auxiliary power units, and electronic tubes.

If the aircraft flight manual designates a storage place for rafts, this space should be used. Whenever possible, stow rafts in the same places in all aircraft of the same model. This allows new crewmen to know the location of the rafts, and thus avoid confusion in the event of a ditching situation.

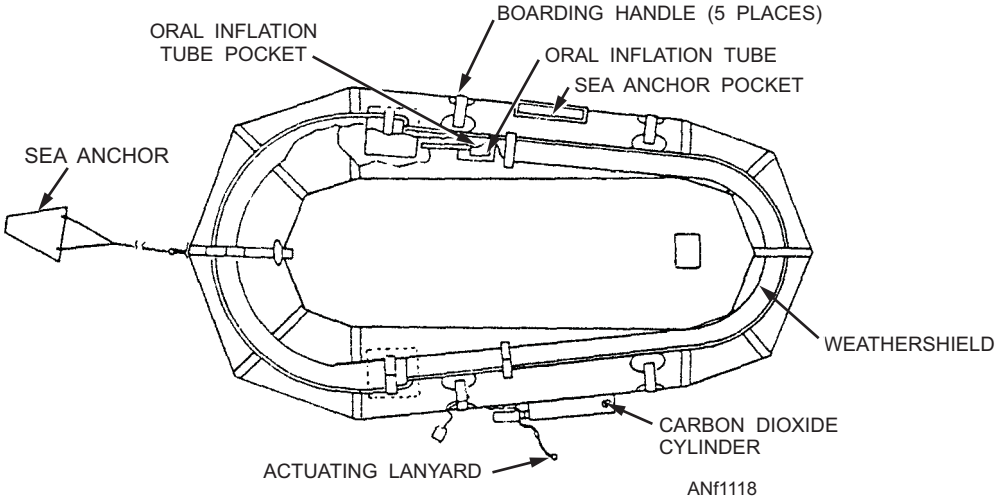

Figure 11-18.—One-man life raft assembly.

Life rafts are constructed of various types of rubberized, rubber-coated, rubber-impregnated, or nylon cloth.

Life rafts can be damaged by abuse. However, when afloat at sea, rafts are surprisingly strong, durable, and stable. The Aircrew Survival Equipmentman (PR) is responsible for inspecting, packing, and maintaining life rafts and related equipment carried in an aircraft.

ONE-MAN LIFE RAFT

The one-man life raft (fig. 11-18) is a single compartment flotation tube with a non-inflatable floor used with various soft and hard types of survival kits. This life raft is intended for use by aircrew members forced down at sea; however, it can also be used when forced down over land for fording down rivers and streams or as a shelter.

Emergency survival equipment is provided with the life raft when it is used with the rigid seat survival kit (RSSK) in a parachute/ejection seat egress system.

The life raft can be inflated manually or automatically. The survivor can pull the CO_2 inflation assembly actuating lanyard or the raft will automatically inflate when it is released from the RSSK. You may top off inflation by using the oral inflation tube.

One-Man Life Raft Container

The one-man life raft container is designed so that the life raft and survival items can be secured to the parachute and ejection seat system. This container is called a rigid seat survival kit (RSSK).

The RSSK (fig. 11-19) is a two-part container. It has a separating type hinge and a release handle assembly that secures the two containers. The upper

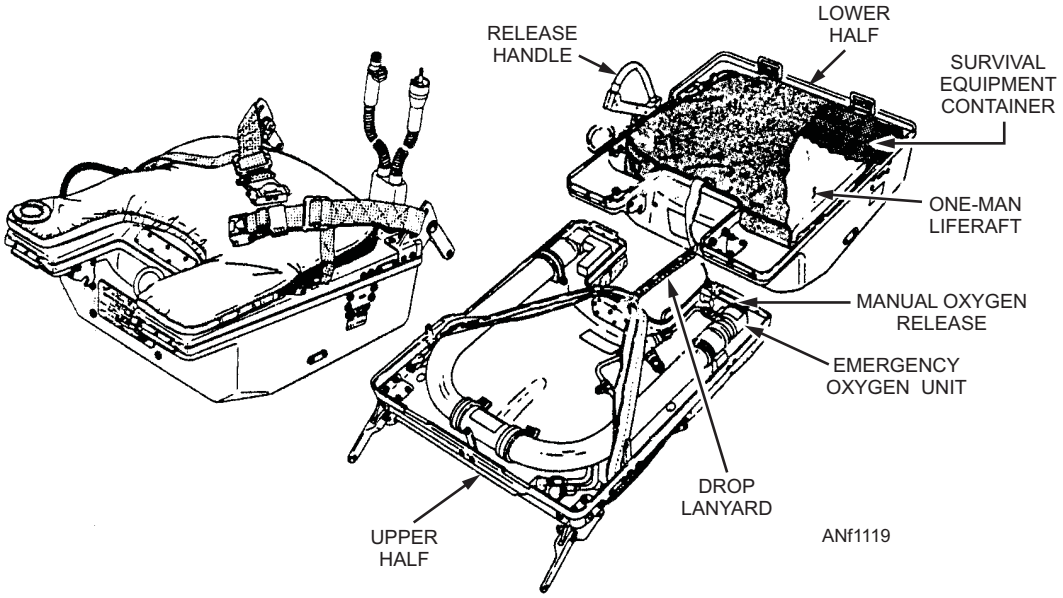

Figure 11-19.—Rigid seat survival kit (RSSK).

half of the container houses an emergency oxygen system and incorporates the lap belt retention assembly. The lower half contains the one-man life raft and survival equipment container. The life raft is released, during parachute descent, by pulling the release handle. The lower half of the container drops away under the weight of the raft and equipment. A drop lanyard is attached between the upper and lower containers. The lanyard automatically inflates the raft and equipment to the upper container. The upper half of the RSSK stays attached to the survivor.

Survival Items

The life raft and many of the survival items supplied in the RSSK (table 11-1) have already been described. Only those items that have not been covered are described in the following paragraphs.

Table 11-1.—Life Raft and Survival Kit Items

DESCRIPTION	QUANTITY REQUIRED
Dye Marker	2
Distress Signal (Day/Night) Mk 124 Mod 0	2
Survival Radio or Beacon	1
Code Card	1
Canned Water 10 oz.	1
Opener, Can, Hand	1
Nylon Cord, Type I, 50-Foot	1
SRU-31/P Kit	1
Bailing Sponge	1
Space Blanket 3 oz.	1

BAILING SPONGE.—The bailing sponge may be used to catch rainwater, to bail a raft, for personal hygiene, and for other purposes under survival conditions.

NYLON CORD.—The 50-foot length of 110-pound test nylon cord is provided for securing items to the raft and for a fishing line.

COMBAT CASUALTY (SPACE) BLANKET.—The space blanket (fig. 11-20) is 84 inches long by 56 inches wide and weighs 3 ounces. The blankets are either orange/silver or olive drab/silver colored.

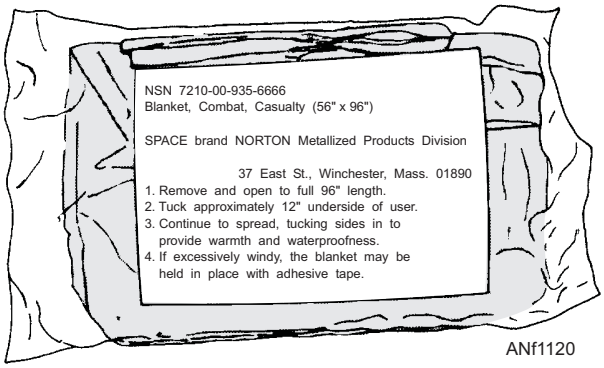

Figure 11-20.—Combat casualty (space) blanket.

The blankets are made of aluminized plastic. They provide warmth and protection against the elements, provide signaling capabilities, and some radar reflectivity.

GROUND/AIR EMERGENCY CODE CARD.—The GND/AIR emergency code card (fig. 11-21) contains aircraft distress signals, aircraft acknowledgments, display signals, and body signals. Use these signals if communications equipment is not operable, no communication equipment is available, or if radio silence is required.

MULTIPLACE LIFE RAFTS

When the crew and passenger capacity of an aircraft make the one-man life raft impractical, multiplace life rafts have been provided. The CO_2 inflated multiplace rafts are made in four sizes. They are equipped with provisions to support 4, 7, 12, or 20 people for 24 hours.

Multiplace life rafts are stowed in the wing, engine nacelle, and outside fuselage compartments. They are automatically inflated and ejected when the compartment door is released. The life raft is tied to the aircraft by a breakable painter line. Droppable life rafts are carried inside the aircraft. They are inflated only after being removed or dropped from the aircraft. To inflate the life raft, pull the inflation assembly actuating handle located on one end of the carrying case.

The 4-, 7-, and 12-man life rafts are similar in design. Only the 7-man and the 20-man rafts will be discussed in the following paragraphs.

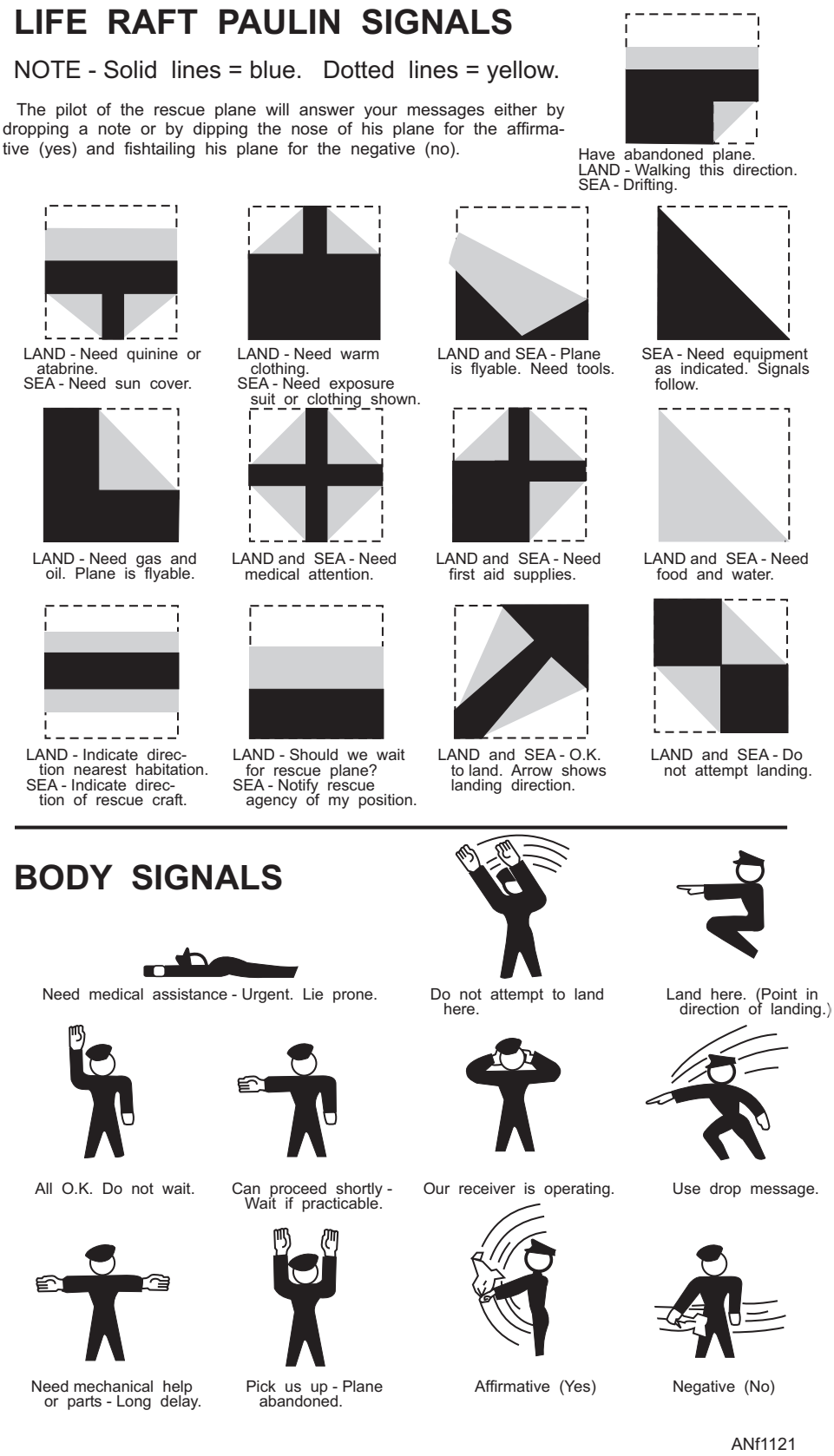

Figure 11-21.—The GND/AIR emergency code card.

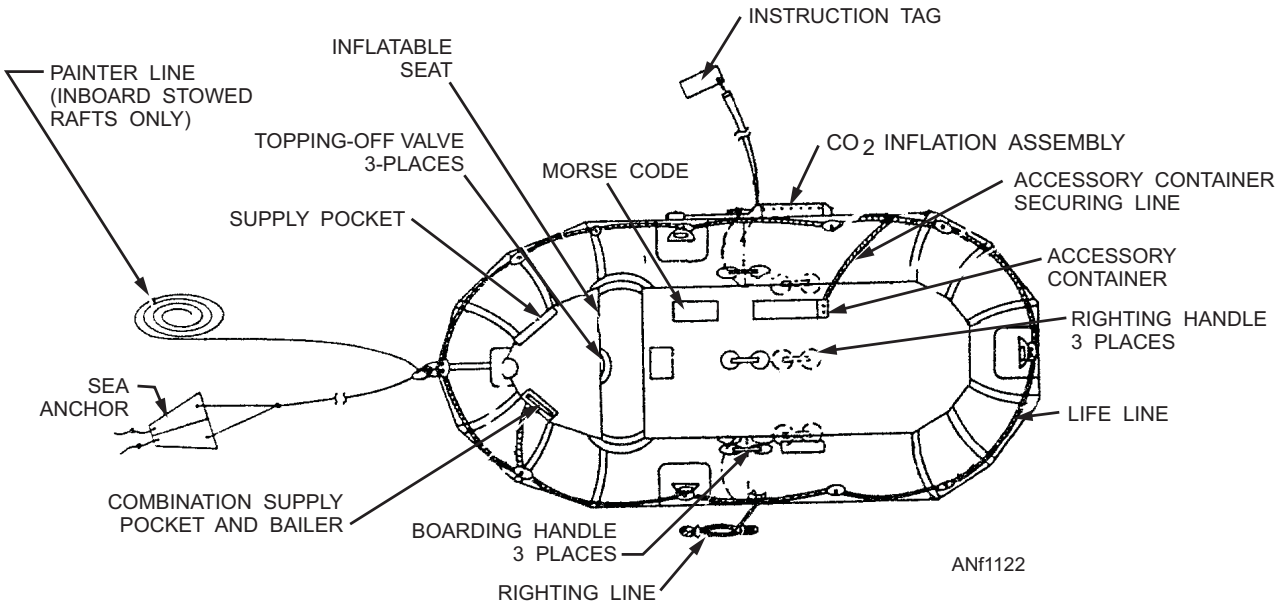

Figure 11-22.—Seven-man life raft assembly, parts nomenclature.

The Seven-Man Life Raft

This life raft (fig. 11-22) consists of a two-compartment main tube, an inflatable seat, a non-inflatable floor, and a sea anchor. The CO_2 inflation assembly inflates the two main tubes. A lifeline and a combination supply pocket and bailer are attached to one of the main tubes. A righting line and an accessory container securing line are attached to the lifeline. Survival items are stowed in the accessory container (table 11-2) and in the supply pocket and bailer (table 11-3). Boarding handles and righting handles are attached to the main tube and floor.

Table 11-2.—Seven-Man Life Raft Accessory Equipment

COMPONENT OR SURVIVAL ITEM	QUANTITY REQUIRED
Packed in Accessory Container	
Dye Marker	4
Distress Signal (Day/Night) Mk 124 Mod 0	6
Water Storage Bag	3
Canned Water (10 oz.)	7
Opener, Can, Hand	1
First Aid Kit	1
Sunburn Ointment	1
Rations	7
Bailing Sponge	1
Hand Pump	1
Space Blanket (12 oz.)	1

Table 11-3.—Seven-Man Life Raft Supply Pocket Survival Items

COMPONENT OR SURVIVAL ITEM	QUANTITY REQUIRED
Packed in Supply Pocket:	
Flare Gun	1
Signal Light (Strobe)	1
Signal Light (Steady Burning)	1
Signal Mirror	1
Survival Radio or Beacon and Battery	1
Code Card	1
Whistle	1
Compass	1
Pocket Knife	1
Nylon Cord, Type I, 50-foot	1

The Twenty-Man Life Raft

The 20-man life raft (fig. 11-23) consists of two single-compartment circular tubes connected by an equalizer tube, a non-inflatable floor suspended between the circular tubes, and a boarding ramp permanently attached to each tube. The floor has a built-in inflatable floor support. A sea anchor, used to retard drifting, is stowed in a pocket at the junction of the circular tubes. An inner lifeline, boarding handles, a heaving line, and accessory equipment are also provided, as shown in table 11-4.

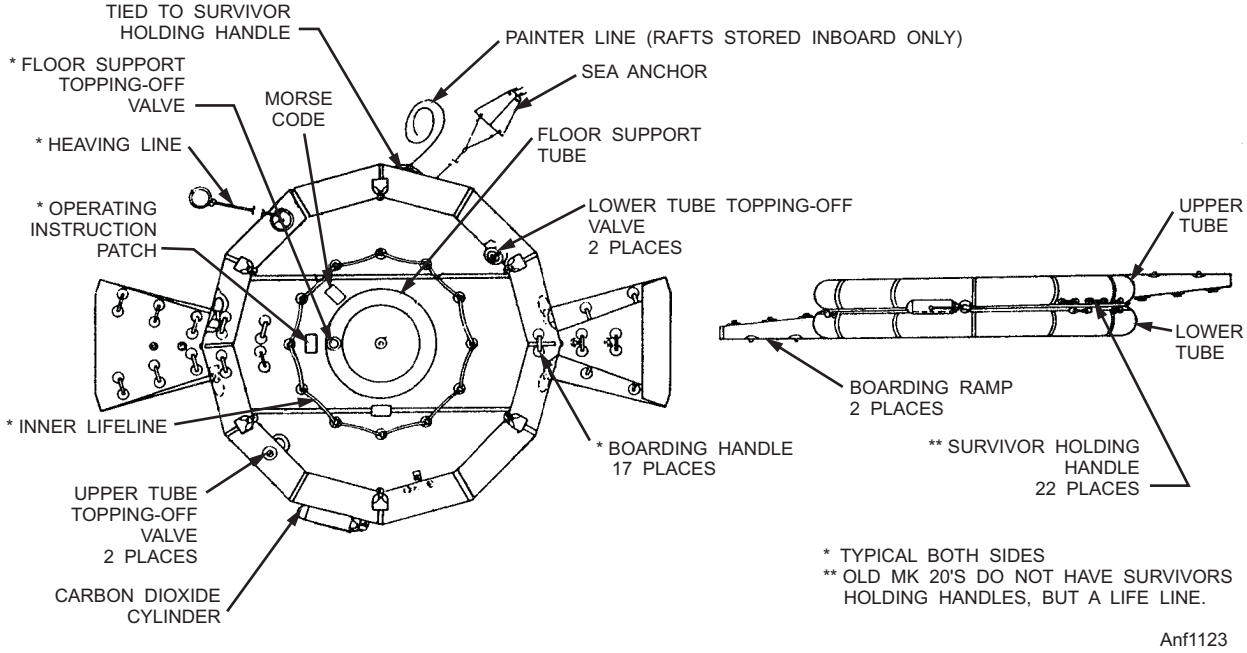

Figure 11-23.—Twenty-man life raft assembly parts nomenclature.

Table 11-4.—Twenty-Man Life Raft Accessory Equipment

COMPONENT OR SURVIVAL ITEM	QUANTITY REQUIRED
Signal Mirror	1
Dye Marker	6
Whistle	1
Code Card	1
Distress Signal (Day/Night) Mk 124 Mod 0	10
Space Blanket (12 oz.)	3
First Aid Kit	1
Sunburn Ointment	3
Rations	20
Water Storage Bag	7
Canned Water (10 oz.)	20
Opener, Can, Hand	2
Compass	1
Pocket Knife	1
Hand Pump	1
Nylon Cord, Type I, 50-foot	1
Bailing Sponge	2
Survival Radio or Beacon and Battery	1
Flare Gun	2
Signal Light (Strobe)	1
Signal Light (Steady Burning)	1
Sealing Clamp	2

A unique design feature of the 20-man life raft is that it is always right-side-up after inflation. The inflation assembly inflates the circular tubes and boarding ramps only. Topping-off valves are located on each side of the circular tubes and on each side of the floor support.

Q11-11. Where is the one-man life raft located in ejection seat systems?

Q11-12. How many sizes are there for the multiplace life raft?

Q11-13. Which multiplace life raft is always right side up when inflated?

PERSONAL SURVIVAL EQUIPMENT

LEARNING OBJECTIVE: Identify items of personal survival equipment and their uses.

When an aircrewman leaves his aircraft under emergency conditions, survival items provide a means of sustaining life. They also provide a means of attracting the attention of rescuers and, if necessary, of evading the enemy.

Survival items are packed in life rafts and droppable kits or packed and carried by the aircrewman on his/her person.

As a possible aircrewman, you need to know what survival items are available and how to use them. Some survival items have already been covered in the life raft and life preserver sections of this chapter. The following survival items are normally carried by the aircrewman on his/her person.

SURVIVAL VEST (SV-2 SERIES)

The survival vest (fig. 11-24) is designed to provide pocket storage for survival items. It provides attachment places for a life preserver and a chest-mounted oxygen regulator. It does not interfere with use of either the quick-fitting or integrated-type parachute harness.

The survival vest is made of nylon cloth. An adjustable harness, shoulder and leg straps, and an entrance zipper secure the vest to the crewman. A helicopter rescue strap is attached to all survival vests that are worn without an integrated torso suit. When required, a chest-mounted oxygen regulator is located inside a pocket secured to the vest by hook-and-pile tape (Velcro). The survival vest and the survival items are shown in figure 11-24 and figure 11-25. Survival items not previously discussed are discussed in the following paragraphs.

Service Pistol

The service pistol is worn only when mission requirements warrant its use.

Sheath Knife

The 5-inch sheath knife is carried as a general-purpose survival tool. It should be kept clean and sharp.

Individual Survival Kit

The individual survival kit (fig. 11-25) is a two-part kit. It is used to provide medical (Packet 1) and general survival (Packet 2) equipment for a downed aircrewman for about 24 hours.

NOTE: This kit may be omitted from the survival vest when the kit is included in the aircraft survival kit.

Mk 79 Mod 0 Illumination Signal Kit

The signal kit (fig. 11-26) is used for day and night signaling to attract the attention of SAR (search and rescue) aircraft or ground rescue parties. The signal kit consists of a hand-held pencil-type launcher (Mk 31), seven (Mk 80) star flare cartridges that screw into the launcher and a bandoleer for storing the flares. Each flare has a minimum burn duration of about 4 1/2 seconds and can be launched up to 250 feet producing a 12,000 candlepower red star.

Signaling Mirror

The emergency signaling mirror consists of an aluminized reflecting mirror glass, a back cover glass, and a sighting device. Personnel can use it to attract the attention of passing aircraft or ships. It reflects light either in sunlight or in hazy weather. Mirror reflections can be seen at distances three to five times farther than a

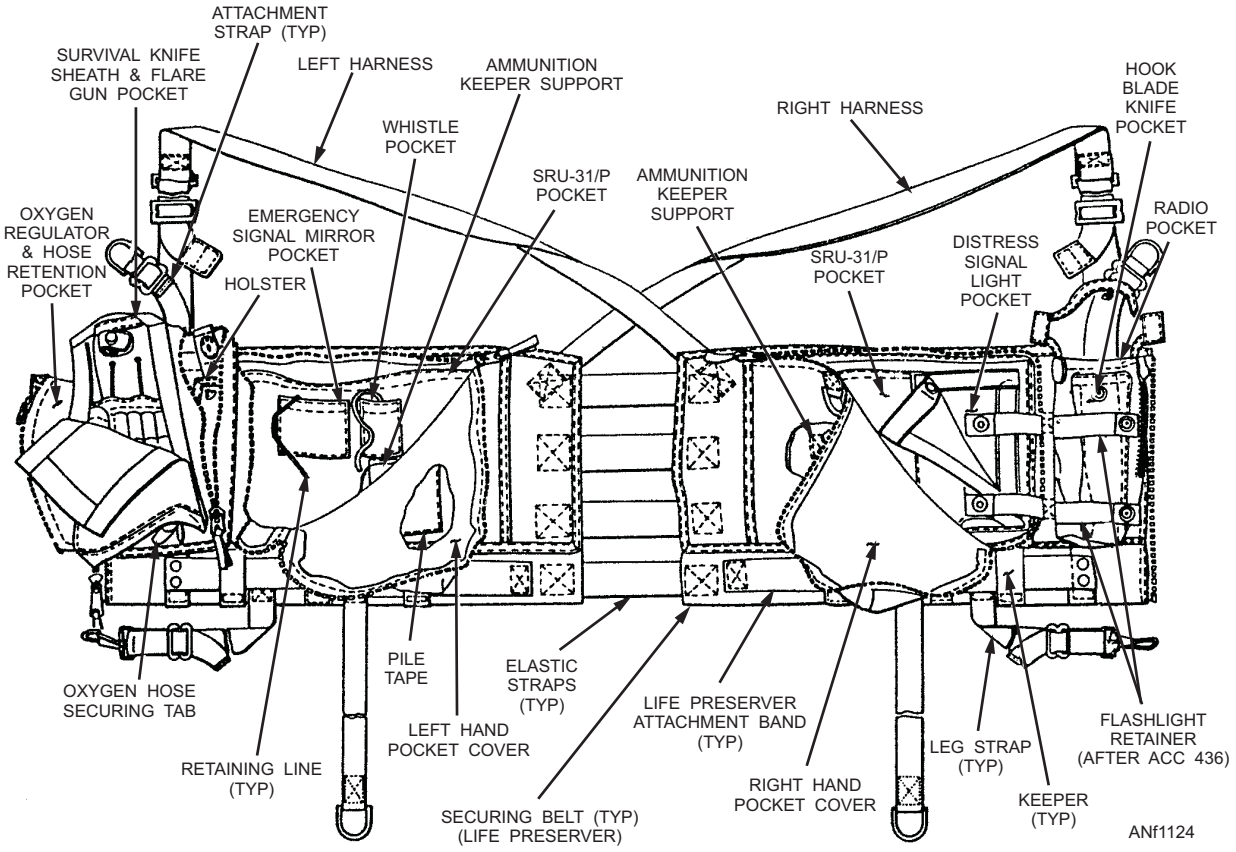

Figure 11-24.—Survival vest (SV-2 series).

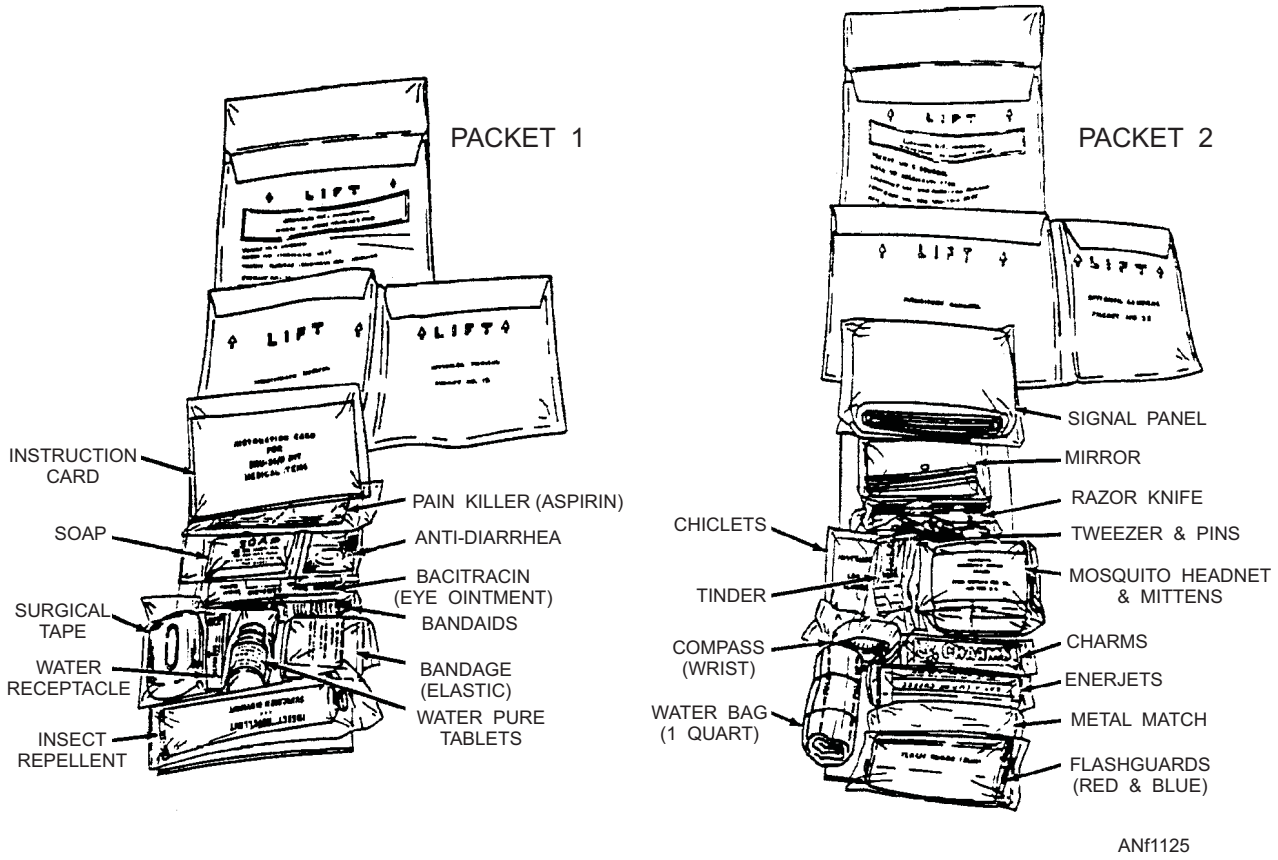

Figure 11-25.—Individual survival kit.

life raft can be sighted at sea. On a clear sunny day, the mirror reflects the equivalent of 8 million candlepower. Flashes from this mirror have been seen from a distance of 40 miles.

Figure 11-27 shows the operation of the signaling mirror. Past experience shows that personnel may have difficulty using the mirror in a bobbing raft at sea.

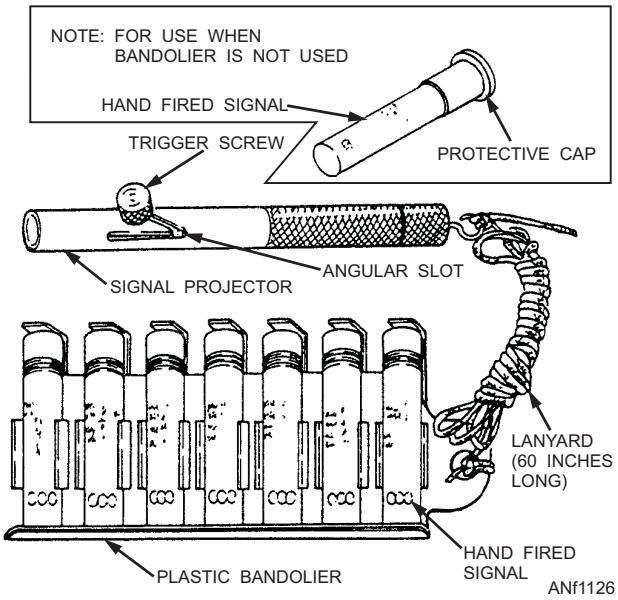

Figure 11-26.—Mk 79 Mod 0 illumination signal kit.

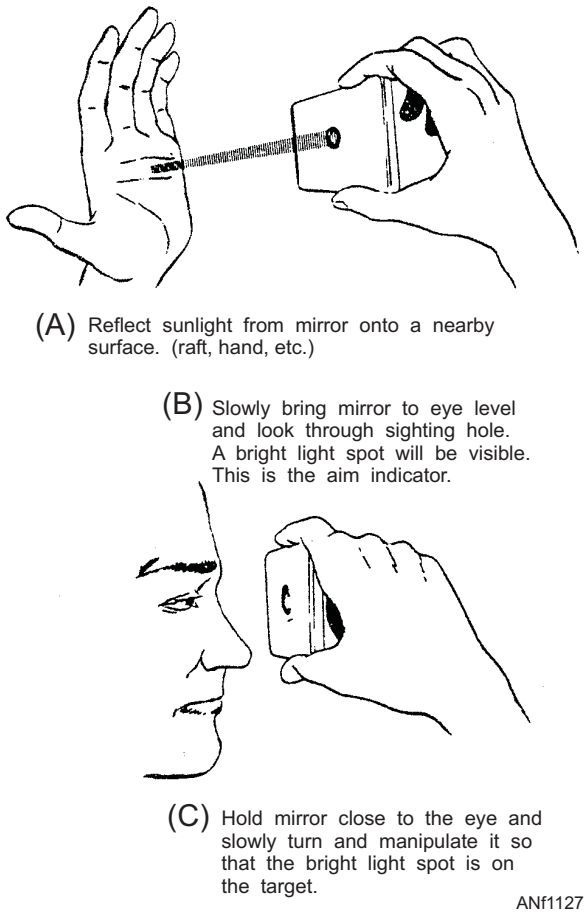

Figure 11-27.—Operation of signaling mirror.

Practice signaling with the mirror on the ground is part of a good training program for flight crews. Practice will enhance rescue chances.

Water Bottle

The water bottle contains 4 ounces of drinking water. Drink this water only to quench an extreme desire for water. Refill the bottle with fresh water every 30 days.

NOTE: When canned water is in the aircraft survival kit, the water bottle may be omitted from the survival kit.

Mk 13 Mod 0 Marine Smoke and Illumination Signal

The Mk 13 signal (fig. 11-28) is used to attract the attention of SAR aircraft and to give pickup aircraft wind drift direction. One end is for night use; the other

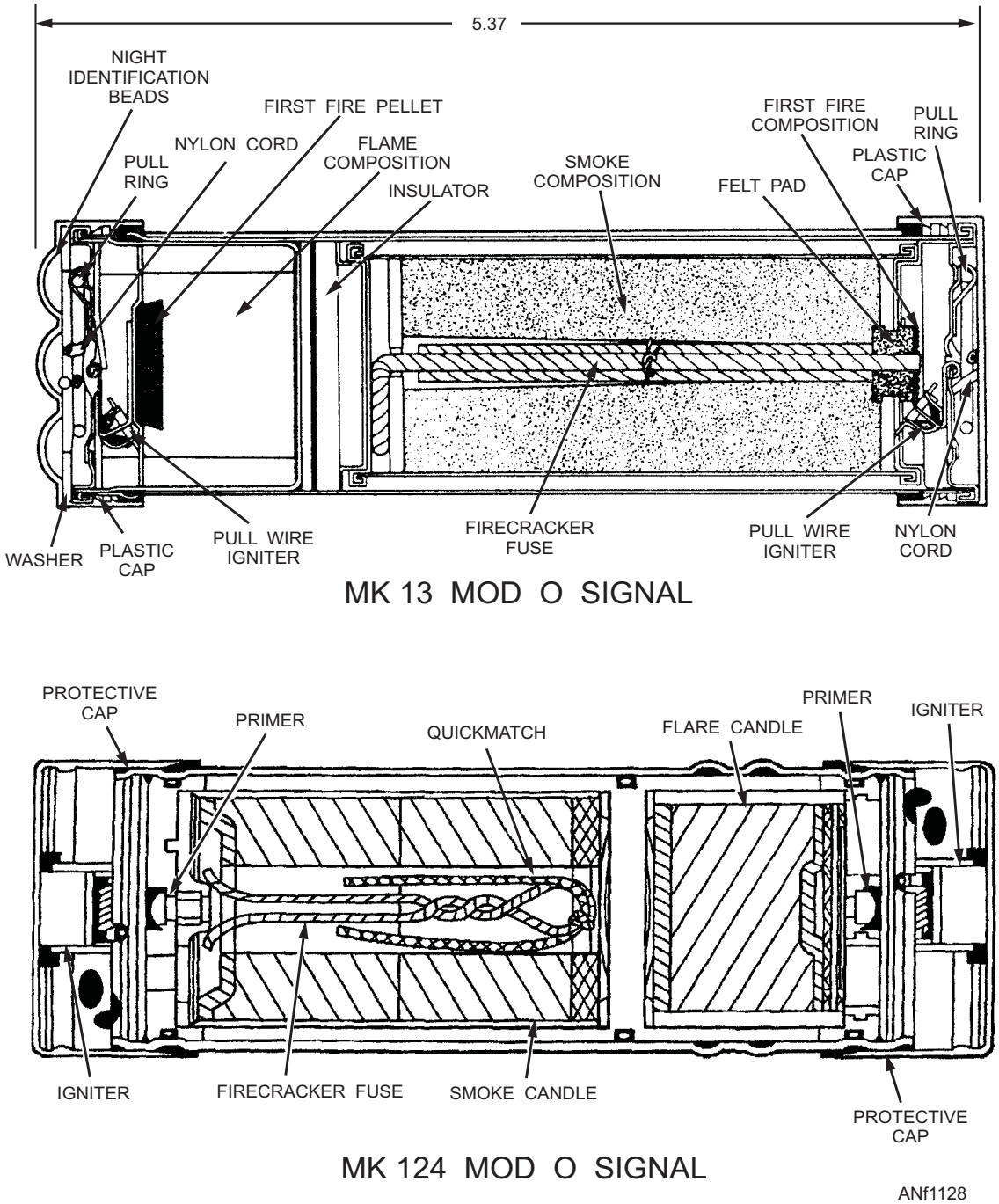

Figure 11-28.—Mk 13 and Mk 124 Mod 0 marine smoke and illumination signals.

end is for day use. The night end produces a red flame; the day end produces orange smoke. Each end burns for about 20 seconds. The night end has bumps around its outer edge, approximately one-quarter inch from the end. This identifies it as the night use end. Follow the instructions printed on the signal.

Mk 124 Mod 0 Marine Smoke and Illumination Signal

The Mk 124 Mod 0 marine smoke and illumination signal (fig. 11-28) is also used for either day or night signaling by personnel on land or sea. It is a ONE hand operable device that emits orange smoke for daytime use and red flare for nighttime use. Burning time for each end is about 20 seconds. Each end has protective plastic caps. The night end has two prominent raised bead circles on the casing to positively identify this end, by the sense of touch, for nighttime use. A label on the outer surface around the whole body of the signal further identifies the smoke (day) and flare (night) ends. The label also gives detailed instructions on how to use the signal.

Distress Marker Light (Strobe)

The battery-operated strobe light (fig. 11-29) emits a high-intensity white flashing light 40 to 60 times per minute. The light is visible at great distances and is used to attract the attention of SAR aircraft, ships, or ground rescue parties. It is located in a pouch attached to the personal flight deck inflatable life preserver and other rescue kits. An infrared filter lens and a blue flash guard lens are provided in the individual survival kit for signaling in combat areas.

SURVIVAL RADIOS AND BEACONS

There are several types and models of survival radios and beacons that are carried on personnel, in aircraft, or stowed inside life rafts. Radios and beacons are used for different purposes. Radios are used to establish two-way communication, on one or more channels, between aircrew and rescue personnel. Beacons transmit only a swept tone signal for search and rescue (SAR) parties to home in on. Radios and beacons are sometimes combined into one system.

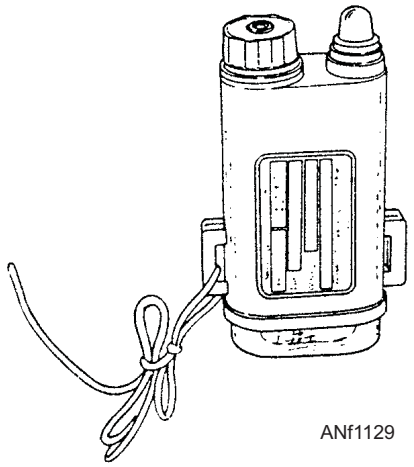

Figure 11-29.—Distress marker light (strobe).

Instructions for use of survival radios and beacons are on instruction plates as part of the equipment.

Q11-14. How many parts are there to the individual survival kit?

Q11-15. How many flares are contained in the Mk 79 Mod 0 Illumination kit?

Q11-16. What hand-held signaling device produces an orange smoke?

RESCUE

LEARNING OBJECTIVE: Identify items of land and sea rescue equipment and their uses.

Land and sea rescue starts when a distress is reported or when a reporting point or arrival time is exceeded. Both military and civilian authorities may react to an emergency. This is called search and rescue (SAR).

Search and rescue craft could be anything from a ship, boat, or fixed-wing aircraft to a fully equipped rescue helicopter with rescue swimmer. The method of searching and rescuing personnel depends on a great many factors, such as location, time, environment, equipment, and personnel. Ditching or bailout often occurs a great distance from a rescue craft. When this happens, military aircraft are diverted or launched to the SAR area.

At sea, fixed-wing aircraft equipped with droppable life raft kits may arrive at the scene and drop a raft to the survivors until the rescue helicopter or surface vessel arrives. The SAR life raft provides communications, medical, and survival items.

RESCUE EQUIPMENT

All naval personnel should be familiar with the equipment used in rescue. The following text discusses rescue equipment and lifting devices that may be used.

Hoisting Cable and Rescue Hook Assembly

The primary rescue device used in helicopter rescue is the hoisting cable and double rescue hook

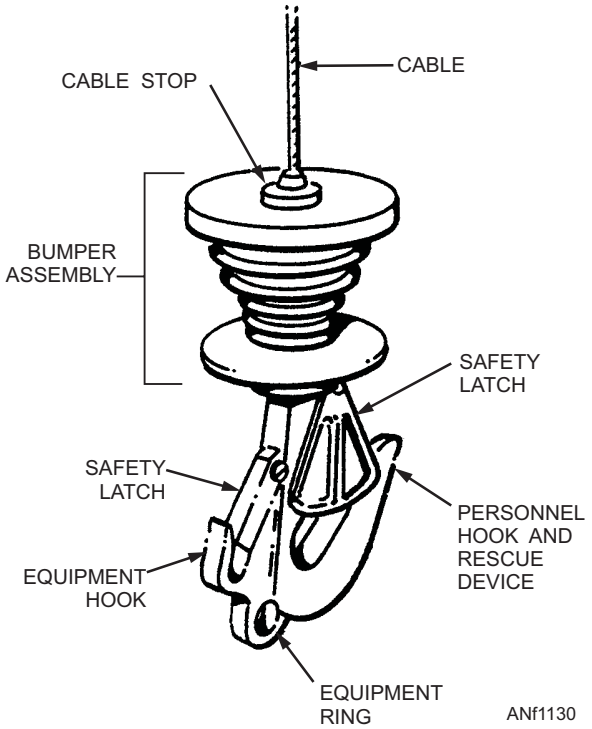

Figure 11-30.—Hoisting cable and rescue hook assembly.

assembly (fig. 11-30). The rescue hook assembly is attached to the end of the helicopter hoisting cable. This hook assembly consists of two gated hooks and an eyelet. The larger hook is used to attach all personnel and/or any elected rescue devices. The smaller hook is used for handling equipment or light cargo. The eyelet is used strictly for cargo hoisting. The upper section of the hook is a ball bearing swivel, which prevents unwinding of the hoisting cable, bumper assembly, and cable stop.

Survivor's Rescue Strop

The survivor's rescue strop (fig. 11-31) (also known as the "horse-collar") is primarily designed as a rescue device for uninjured personnel. It carries one survivor at a time and is connected to the rescue hook assembly. The strop is an inherently buoyant device made of closed cell foam with an orange external cover for high visibility during rescue. A webbing strap running through the cover has a V-ring at both ends for attachment to the double rescue hook. Two black

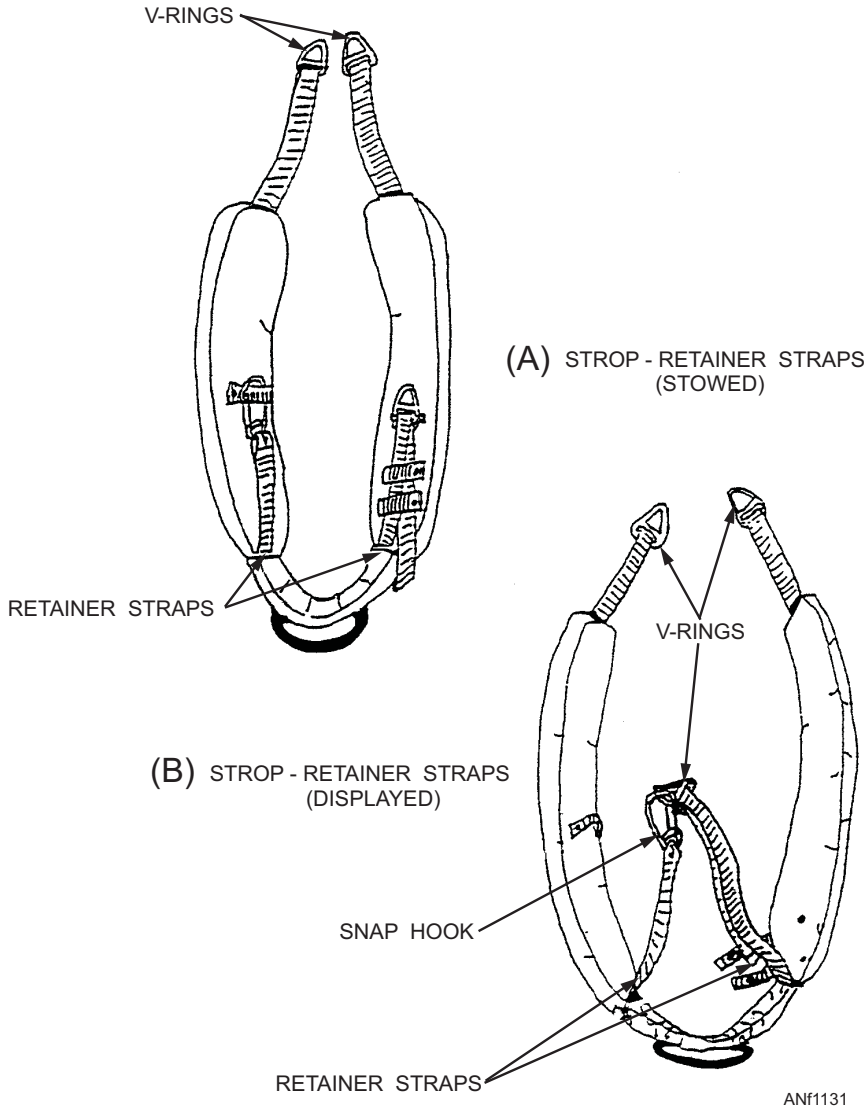

Figure 11-31.—Survivor's rescue strop.

retainer straps are incorporated, one with a snap hook and the other with a V-ring. These straps may be locked around the survivor's body to ensure stability during hoisting.

Forest Penetrator

The forest penetrator (fig. 11-32) may be attached to the rescue hook assembly for land and sea rescue operations. The unit is bright yellow for high visibility. The forest penetrator is 34 inches long and 8 inches in diameter with the three seats retracted. Each seat is approximately 12 inches long and is spring loaded in the retracted position. A spring-loaded retaining latch under each seat secures the seat in the extended position. To release the seat from the extended position, push down on the seat and pull down on the latch. The seat will then snap back into the retracted position. Three webbing safety straps are provided to secure survivors. The straps terminate with a yellow fabric marked TIGHTEN. Yellow webbing tabs, marked PULL OUT, are sewn to the safety straps and extend from one of three stowage openings.

Attachment of a flotation collar allows the forest penetrator to float during air-sea rescue operations. The collar is made of bright orange foam rubber for high visibility. When the flotation collar is installed, the diameter of the penetrator is 9 inches.

Rescue Net

The rescue net (fig. 11-33) is a collapsible, buoyant device designed to accommodate two survivors. It is constructed of a nylon line woven into a net and aluminum tubular frame. A lifting ring for hoisting is located at the top or upper portion of the net, along with flotation collars and locking support rods. These rods incorporate sliding sleeves to prevent the net from collapsing when it is occupied and to make it easy for storage when not in use.

SAR MEDIVAC Litter

The SAR MEDIVAC litter (fig. 11-34) is designed for use in water, shipboard, mountain, and other re-

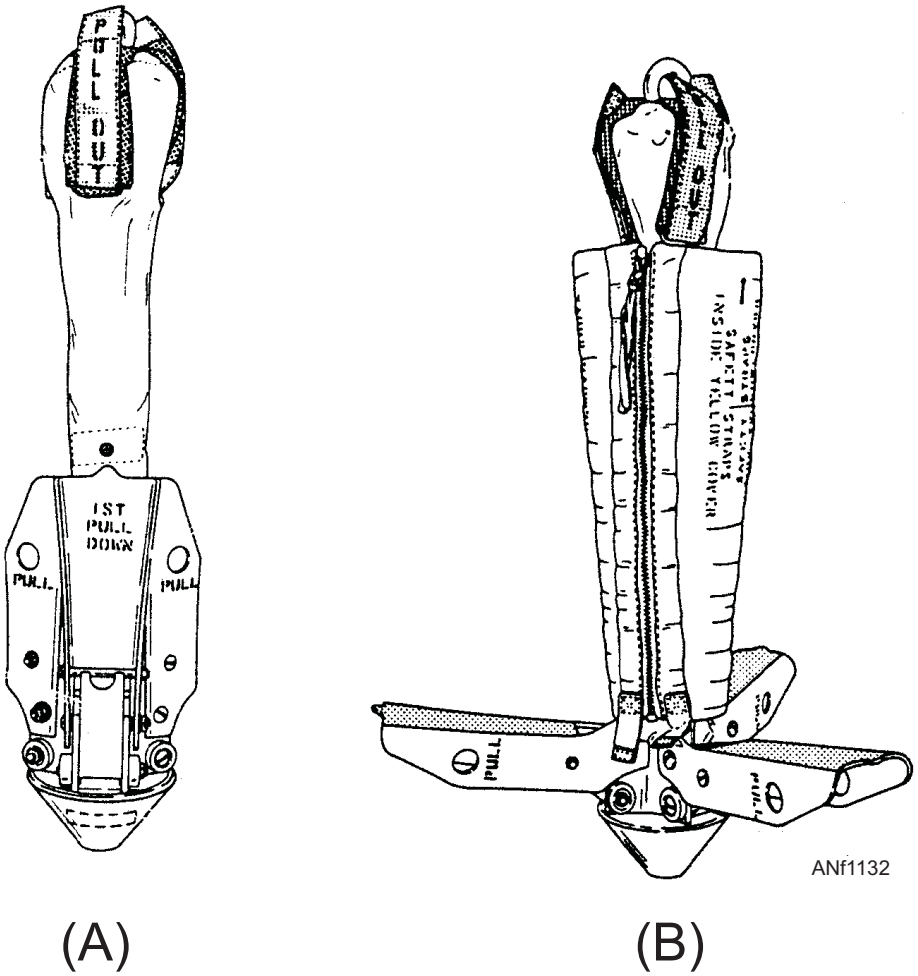

Figure 11-32.—(A) Forest penetrator; (B) Forest penetrator with flotation collar installed.

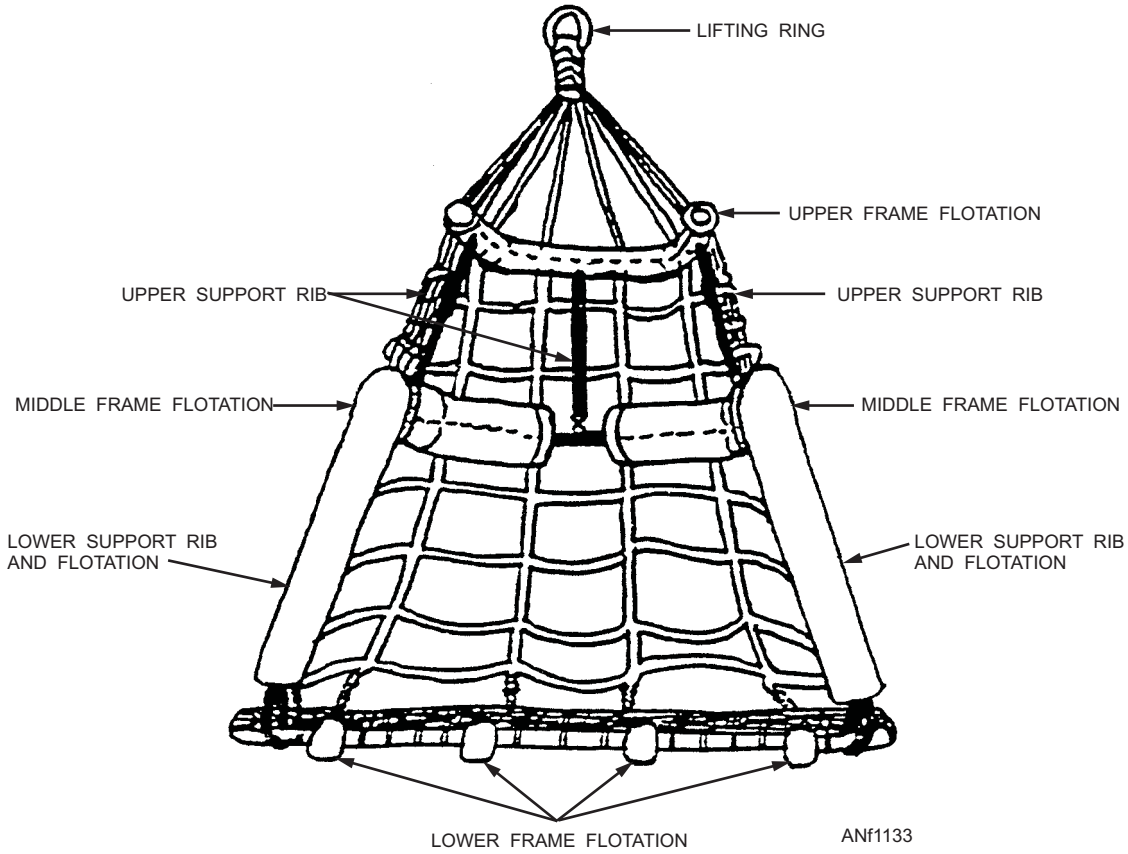

Figure 11-33.—Rescue net.

stricted area rescues. It has a low and narrow profile, floats with the patient's head slightly reclined from the vertical, and can be hoisted vertically with its own slings or horizontally by using standard rescue litter slings (cables) and a trail line assembly. The litter folds in half and is constructed of stainless steel tubing, the case and bed of nylon ballistic cloth, the restraint straps of nylon webbing and (Velcro), and the zippers are heavy duty and noncorrosive. It weighs approximately 40 pounds when fully rigged.

SEA RESCUE

Sea rescue operations require preparation and practice for success. Survivors should take the following actions to aid rescuers:

1. Remove your parachute and get clear of it.

2. Retain your helmet for protection during hoisting operations.

3. Establish communications by using the survival radio. If radio is not available, use signaling devices.

4. Use a Mk 13 or MK 124 Mod 0 smoke signal to show direction of surface winds.

5. During night rescue, turn on the strobe or steady burning signal light.

6. If in a life raft, deploy the sea anchor, and then get clear of the life raft.

7. Ensure that the rescue device is in the water before you touch it. Static electricity may have built up.

For sea rescues, a SAR crewman will be placed into the water. The SAR crewman will take control of the rescue and attach the survivor(s) to the elected rescue device for hoisting.

Q11-17. What does SAR mean?

Q11-18. What is the primary rescue device used in helicopter rescues?

Q11-19. How many seats are on the forest penetrator?

Q11-20. How many survivors is the rescue net designed for?

SUMMARY

In this chapter you have identified aircrew survival equipment, flight clothing, parachutes, life preservers, life rafts, personal survival equipment, rescue procedures, and equipment.

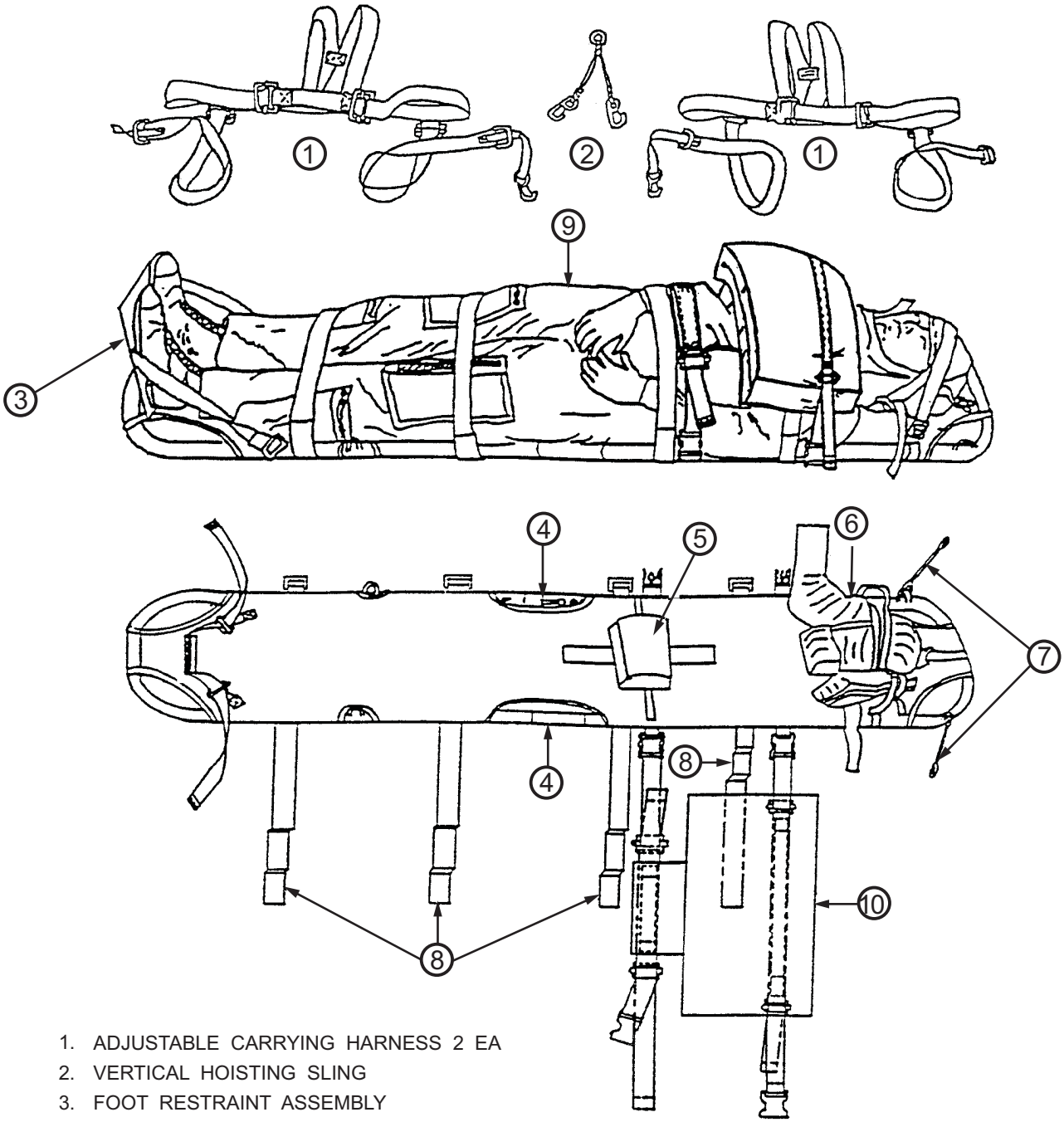

1. ADJUSTABLE CARRYING HARNESS 2 EA
2. VERTICAL HOISTING SLING
3. FOOT RESTRAINT ASSEMBLY
4. LOCKING COUPLERS
5. LUMBAR SUPPORT PAD
6. HEAD RESTRAINT
7. HOISTING CONNECTING CABLE
8. PATIENT STRAPS
9. PATIENT IN LITTER
10. CHEST FLOTATION

ANf1134

Figure 11-34.—SAR MEDIVAC litter.

(THIS PAGE IS INTENTIONALLY LEFT BLANK.)

ASSIGNMENT 11

Textbook Assignment: "Aircrew Survival Equipment," chapter 11, pages 11-1 through 11-25.

11-1. The personnel that rig, pack, and inspect survival equipment are commonly called Parachute Riggers. What is the correct title for this rating?

1. Aircrew Survival Equipmentman (PR)
2. Survival Riggers
3. Ejection and Survival Technicians
4. Aircrew Support Technicians

11-2. Personnel responsible for survival training are assigned to what organization?

1. In the parachute loft
2. In air operations
3. In Flight Physiology
4. In the supply department

11-3. The pressure chamber allows you to use oxygen equipment under the atmospheric pressure conditions encountered at high altitudes, and to see how your body reacts to those changes.

1. True
2. False

11-4. Which of the following is a design feature of the fight clothing used in naval aviation?

1. Fire protection
2. Camouflage
3. Escape and evasion
4. Each of the above

11-5. Summer flying coveralls are fabricated from which of the following types of material?

1. Cotton
2. Aramid cloth (Nomex)
3. Polyester
4. Rayon

11-6. The fabric used in the manufacture of flight coveralls does NOT burn, but will begin to char at what temperature?

1. 300° to 400°F
2. 500° to 600°F
3. 700° to 800°F
4. 900° to 1,000°F

11-7. Flight gloves are manufactured from which of the following types of materials?

1. Soft leather only
2. Nomex fabric only
3. Soft leather and Aramid (Nomex) fabric
4. Nylon twill

11-8. What person is responsible for the upkeep of a pilots helmet?

1. Aircrew Survival Equipmentman
2. The pilot
3. Plane captain
4. AME

11-9. What series helmet is designed for all tactical fixed-wing aircraft?

1. HGU-84/P
2. PPH-11/S
3. HGU-68(V)/P
4. APH-23/V

11-10. What series helmet is designed for all helicopter aircrew members?

1. HGU-84/P
2. PPH-11/S
3. HGU-68(V)/P
4. APH-23/V

11-11. How many sizes are available for the HGU-84/P flight helmet?

1. One
2. Two
3. Three
4. Four

11-12. What type of protection is available to the aircrewman for excessive "g" forces?

1. Anti-blackout suit
2. Anti-g coveralls
3. Pressurized cabins
4. Full pressure suit

11-13. How many different models of anti-g suits are used by the Navy?

1. One
2. Two
3. Three
4. Four

11-14. Which of the following symptoms does a person experience due to excessive "g" forces?

1. Blacking out
2. Loss of vision
3. Lower mental efficiency
4. Each of the above

11-15. What "g" range can an aircrewman withstand without anti-g protection?

1. 2.2 to 4.2 g's
2. 4.5 to 5.5 g's
3. 6.0 to 7.0 g's
4. 8.0 to 9.0 g's

11-16. The quick donning antiexposure suit comes equipped with which of the following parts?

1. Boots
2. Hood
3. Mittens
4. Each of the above

11-17. Antiexposure suits are required when personnel are exposed to which of the following conditions?

1. When the water temperature is 50°F or below
2. When the outside air temperature (OAT) is 32°F (wind chill factor corrected) or below
3. Both 1 and 2 above
4. When the sum of the air and water temperatures exceeds 85°F

11-18. When water temperature is between 50° and 60°F, what person determines whether an antiexposure suit will be worn?

1. The aircraft commander
2. The commanding officer
3. The maintenance officer
4. The individual

11-19. A personnel parachute consists of how many major parts?

1. Three
2. Four
3. Five
4. Six

11-20. How many basic types of parachutes are used by the Navy?

1. One
2. Two
3. Three
4. Four

11-21. Which of the three basic types of Navy parachutes is used in ejection seat aircraft?

1. NES
2. NC
3. NB

11-22. What size canopy is used in the NES type parachute?

1. 12 foot
2. 24 foot
3. 28 foot
4. 32 foot

11-23. Upon pilot ejection, how many methods are there for deploying the parachute?

1. One
2. Two
3. Three
4. Four

11-24. Which of the following parachute parts pull(s) the main canopy from the container upon ejection?

1. The suspension lines
2. The automatic opening device
3. The ripcord pins
4. The pilot chute

11-25. What total number of projectiles are installed on a spreading gun?

1. 10
2. 12
3. 14
4. 16

11-26. Which of the following parachute harnesses is used with the NES type parachute?

1. Integrated torso
2. Back pack
3. Quick fit
4. Chest pack

11-27. What are the two types of quick-fit harnesses?

1. Torso and back types
2. Chest and back types
3. Quick-fit type 1 and quick-fit type 2
4. Standard and chest types

11-28. What is the purpose of the gated "D" ring used on the integrated torso harness?

1. To attach a helicopter rescue hook
2. To secure to the life raft
3. To attach to another survivor
4. To attach to a survival kit

11-29. What components connect the parachute canopy to the parachute harness?

1. Parachute containers
2. Integrated torso harnesses
3. Rip cord pins
4. Suspension lines

11-30. What total number of sections make up a gore on a parachute canopy?

1. One
2. Two
3. Three
4. Four

11-31. How is each gore section of a parachute canopy identified?

1. By colors
2. By numbers
3. By letters
4. By size

11-32. Most parachute canopies are manufactured in different colors. What total number of colors are used?

1. Two
2. Three
3. Four
4. Five

11-33. Which of the following precautions is a proper handling procedure for a parachute?

1. Do not carry a parachute by its ripcord handle or lift webs
2. Keep a parachute dry and away from all sources of moisture
3. Do not drop a parachute
4. Each of the above

11-34. Acids of any kind, even in weak solutions, are extremely harmful to parachute fabrics.

1. True
2. False

11-35. Personnel life preservers are rapidly inflated by what means?

1. CO_2 cartridge
2. Oral inflation tube
3. Pneumatic canister
4. Nitrogen hose

11-36. How is the distress signal light activated on the LPP series life preserver?

1. A toggle switch
2. By water
3. A connector wire
4. The "pull" lanyard

11-37. Dye markers will be a good target up to what maximum amount of time?

1. 20 minutes
2. 30 minutes
3. 45 minutes
4. 60 minutes

11-38. A dye marker can be seen by an aircrewman in an aircraft flying at 3,000 feet for what approximate distance?

1. 11 miles
2. 22 miles
3. 7 miles
4. 18 miles

11-39. What type of life preserver is designed for constant-wear and attaches to the SV-2 series survival vest?

1. LPP
2. LPU
3. LPA

11-40. What is the purpose of the "D" ring on the life preserver unit (LPU) waist lobe?

1. Attach to the helicopter rescue hook
2. To secure the waist lobes together
3. To attach the life raft to the survivor
4. To secure the survival kit

11-41. Which of the following is NOT a piece of aviation survival equipment?

1. LPU life preserver
2. LPP life preserver
3. Flight deck inflatable life preserver
4. Each of the above

11-42. By what means is overinflation prevented on the flight deck inflatable life preserver?

1. A pressure-relief valve diaphragm
2. An oral inflation tube check valve
3. A metered orifice in the CO_2 cylinder
4. A pressure sensitive blow-out plug

11-43. How many pounds of buoyancy does the bladder support on the flight deck life preserver?

1. 15 pounds
2. 21 pounds
3. 29 pounds
4. 37 pounds

11-44. The outer garment of the flight deck inflatable life preserver is available in a variety of colors used to identify the carrier/flight deck personnel occupational fields.

1. True
2. False

11-45. Where would you find the maintenance and inspection requirements for the flight deck inflatable life preserver?

1. The squadron paraloft maintenance publication
2. The shipboard Planned Maintenance System
3. The AME work center
4. The quality assurance work center

11-46. Naval aircraft that make operational flights over water are required to carry enough life rafts to carry all the assigned crew plus passengers.

1. True
2. False

11-47. Which of the following methods is used to automatically inflate the one-man life raft contained in the RSSK?

1. The lap belt retention assembly inflates the life raft
2. The drop lanyard will inflate the raft upon separation from the RSSK
3. The life raft will inflate upon contact with salt water

11-48. Which of the following items are contained in the rigid seat survival kit (RSSK) in a parachute/ejection seat egress system?

1. Emergency oxygen system
2. One-man life raft
3. Survival equipment container
4. Each of the above

11-49. Multiplace life rafts are manufactured in how many different sizes?

1. Four
2. Five
3. Six
4. Seven

11-50. Multiplace life rafts are equipped with provisions to support 4, 7, 12, or 20 people for how many hours?

1. 8 hours
2. 12 hours
3. 24 hours
4. 36 hours

11-51. Which of the following types of life rafts is equipped with boarding ramps?

1. 4-man life raft
2. 7-man life raft
3. 12-man life raft
4. 20-man life raft

11-52. What is a unique design feature of the 20-man life raft?

1. The shape and color of the raft
2. Its floating characteristics in rough seas
3. It is always right-side-up after inflation
4. It is virtually unsinkable

11-53. What is the length of the sheath knife carried by the aircrewman while wearing the SV-2 series survival vest?

1. 4 inches
2. 5 inches
3. 6 inches
4. 7 inches

11-54. What are the two parts of the individual survival kit contained in the SV-2 series survival vest?

1. Emergency and all-purpose
2. Survival and evasion packets
3. Land and sea packets
4. Medical and general survival equipment

11-55. How many Mk 80 star flare cartridges are contained in the Mk 79 Mod 0 illumination signal kit?

1. Five
2. Six
3. Seven
4. Eight

11-56. A Mk 80 star flare cartridge has a minimum burn duration of 4 1/2 seconds and can be launched up to how many feet?

1. 100 feet
2. 250 feet
3. 300 feet
4. 450 feet

11-57. Flashes from a signaling mirror can be seen up to what total number of miles?

1. 10 miles
2. 20 miles
3. 40 miles
4. 50 miles

11-58. The water bottle carried by the aircrewman will hold what total number of ounces of water?

1. 4 ounces
2. 6 ounces
3. 10 ounces
4. 16 ounces

11-59. What color is the smoke that is emitted from the day end of the Mk 124 Mod 0 marine smoke and illumination signal?

1. White
2. Orange
3. Red
4. Green

11-60. What is the approximate burning time of each end of the Mk 124 Mod 0 marine smoke and illumination signal?

1. 20 seconds
2. 30 seconds
3. 45 seconds
4. 60 seconds

11-61. How is the night end of the Mk 124 Mod 0 marine smoke and illumination signal identified?

1. Two prominent raised beads
2. A large washer with pull lanyard
3. The label under the end cap
4. Each of the above

11-62. The battery operated distress marker strobe light emits a high-intensity white flashing light approximately how many times per minute?

1. 30 to 50 times
2. 40 to 60 times
3. 70 to 90 times
4. 100 to 120 times

11-63. Radios are used to establish two-way communication, on one or more channels, between aircrew and rescue personnel.

1. True
2. False

11-64. What are some of the factors to consider when searching for and rescuing personnel?

1. The location and time
2. The environment
3. Equipment and personnel
4. All of the above

11-65. What is the primary rescue device used in helicopter rescues?

1. The hoisting cable and double rescue hook
2. The survivor’s rescue strop
3. The SAR medivac litter
4. The forest penetrator with floatation

11-66. What is the purpose of the small hook on the double rescue hook?

1. For hoisting personnel
2. Attachment of a rescue device
3. Secure medivac litter to the aircraft
4. Handling light cargo

11-67. What is the survivor’s rescue strop commonly called?

1. Lifting sling
2. Horse collar
3. Hoisting strap
4. Rescue ring

11-68. How many "V" rings are incorporated on the survivor’s rescue strop?

1. One
2. Two
3. Three
4. Four

11-69. The forest penetrator can be used for land and sea rescue operations.

1. True
2. False

11-70. How many safety straps are incorporated on the forest penetrator?

1. One
2. Two
3. Three
4. Four

11-71. The rescue net is designed to accommodate what total number of survivors?

1. One
2. Two
3. Three
4. Four

11-72. What is the approximate weight of a fully rigged SAR medivac litter?

1. 120 pounds
2. 85 pounds
3. 40 pounds
4. 100 pounds

CHAPTER 12

CRASH RESCUE AND FIRE FIGHTING

INTRODUCTION

Fire fighting is a highly technical profession. Fire fighting in and around crashed aircraft is a highly specialized field of fire fighting. An individual willing to become a fire fighter must process the following qualities: alertness, courage, dedication, agility, physical strength, and the ability to be an exacting team worker.

The primary duty of the fire fighter is saving life. If there is a fire aboard an aircraft with ordnance on board, there is potential for loss of life. If an ordnance cook-off occurred, the top priority would be to cool off the ordnance, simultaneously lay a personnel rescue path, and to extinguish the fire.

During frequent drills and training sessions, it is important for you to actually use all equipment, extinguishing agents, and tools so you will learn their capabilities and limitations.

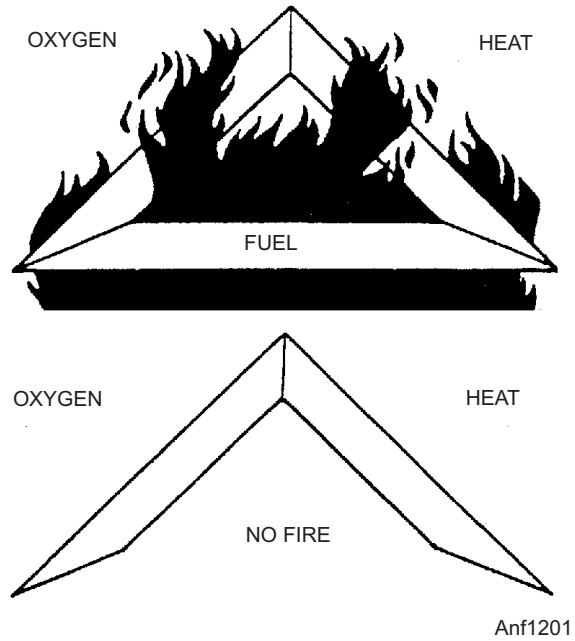

Figure 12-1.—Requirements for combustion.

THE CHEMISTRY OF FIRE

LEARNING OBJECTIVE: Identify the four elements necessary to produce fire, and recognize the characteristics associated with the different classes of fires. Recognize the characteristics of the five different extinguishing agents.

Fire is the most common form of chemical reaction. The process of fire may be regarded as a chemical triangle (fig. 12-1). The three sides consist of fuel (combustible matter), heat, and oxygen. After extensive research, the presence of a fourth element has been identified. It is the chemical chain reaction (fig.12-2) that takes place in a fire that allows the fire to

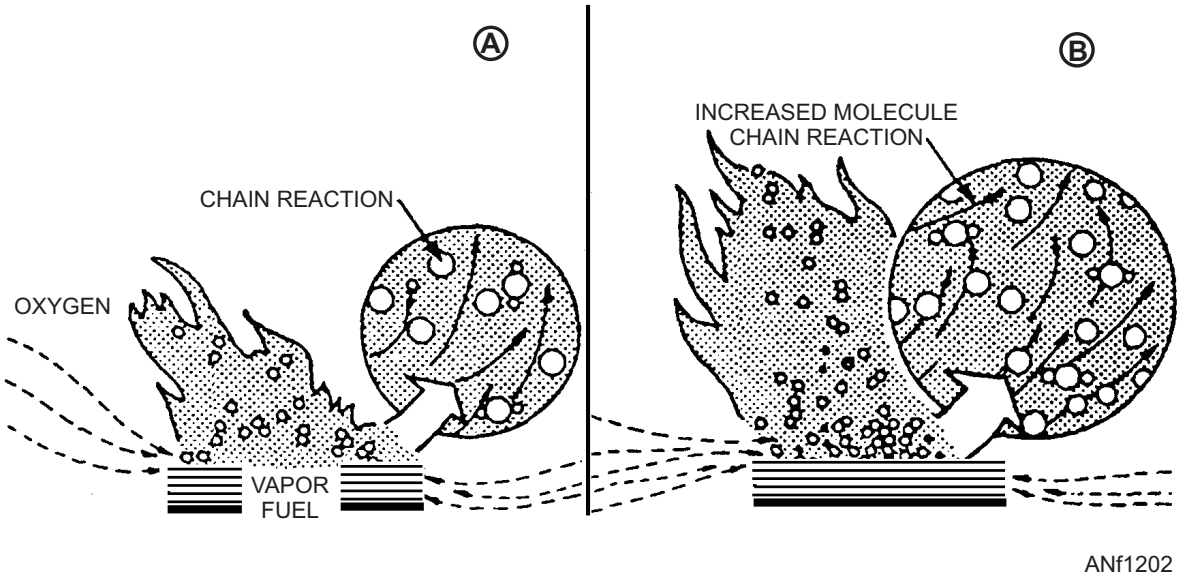

Figure 12-2.—Chain reaction.

both sustain itself and grow. This process of fire is now called the "fire tetrahedron." See figure 12-3.

The most common method of controlling or extinguishing a fire is to eliminate one or more of sides of the tetrahedron. This can be accomplished by the following methods.

1. Smothering—removing the oxygen
2. Cooling—removing the heat
3. Starving—removing the fuel or combustible matter

There are two terms you need to understand about fires. These are the *fire point* and the *flash point*.

The *fire point* of a substance is the lowest temperature at which its vapors can be ignited and will continue to burn. At this temperature, the vapor will ignite spontaneously in the air. Also, substances don't have to be heated to this ignition temperature throughout in order to ignite.

The *flash point* of a substance is the temperature at which the substance gives off enough vapors to form an ignitable mixture with the air near the substance's surface. An ignitable mixture is a mixture within the explosive range. The mixture is capable of spreading a flame away from the source of ignition when ignited. For example, fuel will spontaneously ignite when a portion of it (or its vapors) is exposed to temperatures around 500°F (ignition temperature). It is capable of being touched off by a match or spark at temperatures down to -5°F (fire point). It will also flash across the surface at temperatures from -5°F down to -45°F (flash point). From these examples, you can readily see that fuel has a low flash point and is easily ignited. Fuel is a constant fire hazard around aircraft. A spark, heat caused by friction, or an electrical discharge could supply enough heat to cause fuel to flash.

CLASSES OF FIRE

Different types of fires are combated by different means. It is important that you know how to identify the various types of fires and understand why each type must be combated in a specific way.

Class A

Class A fires occur in combustible materials, such as bedding, mattresses, books, cloth, and any matter that produces an ash. All fires of this class leave embers, which are likely to rekindle if air comes in contact with them. Class A fires must not be considered extinguished until the entire mass has been cooled below its ignition temperature. Smothering (removing the oxygen) is not effective for class A fires because it does not lower the temperature of the smoldering embers below the surface. The extinguishing agents most effective for class A fires are solid water stream, both high- and low-velocity fog, CO_2, and water immersion.

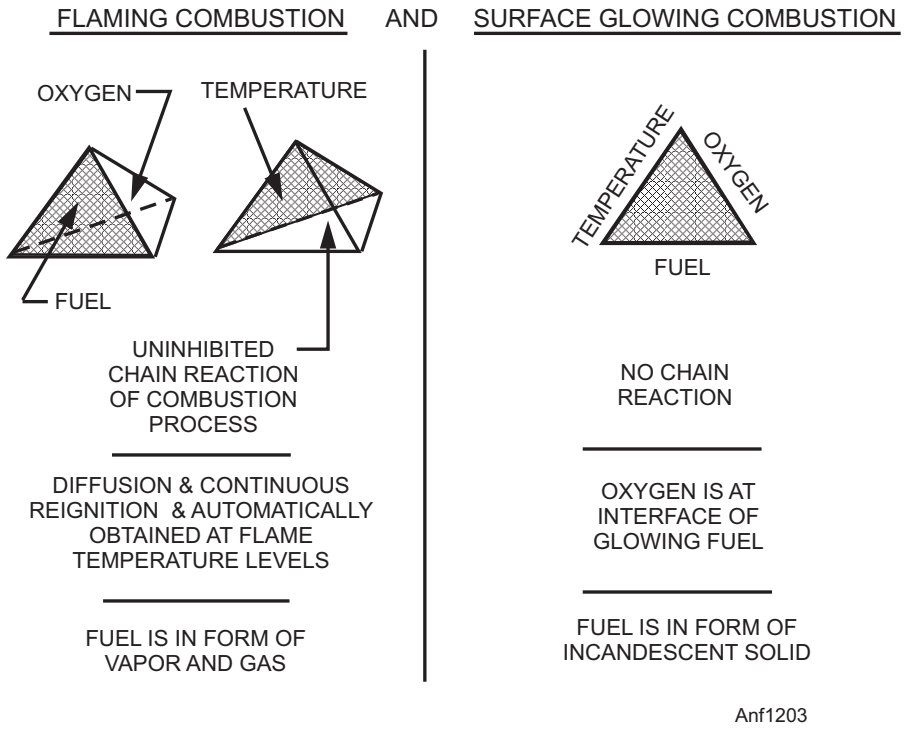

Figure 12-3.—Tetrahedron and fire triangle.

Class B

Class B fires occur with flammable liquid substances. Examples of class B fires are gasoline, jet fuels, paints, grease, and any petroleum-based product. These and other combustible substances do not leave embers or ashes. Class B fires are extinguished by providing a barrier between the burning substance and oxygen necessary for combustion. Chemical and mechanical foams produce such a barrier and are known as permanent smothering agents, but their effect is only temporary. The application must be renewed if there is any danger of reignition. The extinguishing agents recommended for combating class B fires are CO_2, PKP, Halon, and Aqueous Film-Forming Foam (AFFF).

NOTE: Water by itself is **NOT** recommended for use on class B fires.

Class C

Class C fires are energized electrical fires that are attacked at prescribed distances by using nonconductive agents such as CO_2 and Halon 1211. The most effective tactic is to de-energize the system and handle the fire as a class A fire. When fires are not deep seated, clean agents that pose no cleanup problem, such as Halon 1211 or CO_2, are the preferred extinguishing agents.

WARNING

Water in any form, particularly salt water, is dangerous when used on electrical equipment.

Class D

Class D fires are combustible metals, such as magnesium and titanium. Water in large quantities, as high velocity fog, is the recommended extinguishing agent. When water is applied to burning class D materials, there may be small explosions. The fire fighter should apply water from a safe distance or from behind shelter. Metal fires on board ships are commonly associated with aircraft wheel structures.

EXTINGUISHING AGENTS

There are many materials that may be used as fire-fighting agents. The primary agents discussed in the following paragraphs are the most extensively used aboard naval ships.

Water

Water is a cooling agent, and on board ship, the sea provides an inexhaustible supply. If the surface temperature of a fire can be lowered below the fuel's ignition temperature, the fire will be extinguished. Water is most efficient when it absorbs enough heat to raise its temperature to 212°F (100°C) or boiling point. At this temperature, the seawater will absorb still more heat until it changes to steam. The steam carries away the heat, which cools the surface temperature.

Water in the form of fog is very effective for fire-fighting purposes. Additionally, water fog can provide protection to fire fighters from heat. However, the fog must be applied directly to the area to be cooled if its benefits are to be realized.

Water in the form of a straight stream (also called solid stream) is used to reach into smoke-filled spaces or areas at a distance from the fire fighter. When a straight stream is needed as an extinguishing agent, it should be directed into the seat of the fire. For maximum cooling, the water must come in direct contact with the burning material. A straight stream is best used to break up and penetrate materials.

Aqueous Film-Forming Foam (AFFF)

AFFF is composed of synthetically produced materials similar to liquid detergents. These film-forming agents are capable of forming water solution films on the surface of flammable liquids. AFFF concentrate is nontoxic and biodegradable in diluted form. When proportioned with water, AFFF provides three fire-extinguishing advantages.

1. An aqueous film is formed on the surface of the fuel that prevents the escape of the fuel vapors.
2. The layer effectively excludes oxygen from the fuel surface.
3. The water content of the foam provides a cooling effect.

The primary use of AFFF is to extinguish burning flammable or combustible liquid spill fires (class B). AFFF has excellent penetrating characteristics and is superior to water in extinguishing class A fires.

Carbon Dioxide (CO_2)

CO_2 is an inert gas and extinguishes fires by smothering them. CO_2 is about 1.5 times heavier than air, which makes it a suitable extinguishing agent

because it tends to settle and blanket the fire. CO_2 is a dry, noncorrosive gas, which is inert when in contact with most substances and will not leave a residue and damage machinery or electrical equipment. CO_2 is a nonconductor of electricity regardless of voltage, and can be safely used in fighting fires that would present the hazard of electric shock.

CO_2 extinguishes the fire by diluting and displacing its oxygen supply. If gaseous CO_2 is directed into a fire so that sufficient oxygen to support combustion is no longer available, the flames will die out. CO_2 has limited cooling capabilities, and may not cool the fuel below its ignition temperature. It is more likely than other extinguishing agents to allow reflash. Therefore, the fire fighter must remember to stand by with additional backup extinguishers.

NOTE: CO_2 is not an effective extinguishing agent for fires in materials that produce their own oxygen supply, such as aircraft parachute flares or fires involving reactive metals, such as magnesium and titanium.

Halon 1211

Halon is a halogenated hydrocarbon. Halon 1211, known chemically as *bromochlorodifluoromethane,* is colorless and has a sweet smell. Halon attacks the fire by inhibiting the chemical chain reaction. Halon decomposes upon contact with flames or hot surfaces above 900°F (482°C).

Halon 1211 is used for twin agent (AFFF/Halon 1211) applications on board flight and hangar deck mobile fire-fighting equipment. For flight and hangar deck fire-fighting procedures, you should refer to NAVAIR 00-80R-14, *NATOPS U.S. Navy Aircraft Fire-Fighting and Rescue Manual.*

Potassium Bicarbonate (Purple-K-Powder or PKP)

Potassium bicarbonate (PKP) is a dry chemical principally used as a fire-fighting agent for flammable liquid fires. When PKP is applied to fire, the dry chemical extinguishes the flame by breaking the combustion chain. PKP does not have cooling capabilities on fire. PKP is highly effective in extinguishing flammable liquid (class B) fires. Although PKP can be used on electrical (class C) fires, it will leave a residue that may be hard to clean. Also, when combined with moisture, it may corrode or stain the surfaces it settles on.

PKP does not produce a lasting inert atmosphere above the surface of a flammable liquid. Therefore, its use will not result in permanent extinguishing if ignition sources, such as hot metal surfaces or persistent electrical arcing, are present. Reflash of the fire will most likely occur. The ingredients used in PKP are nontoxic. However, the discharge of large quantities may cause temporary breathing difficulty and, immediately after the discharge, it may seriously interfere with visibility.

Q12-1. What are the four elements necessary to produce fire?

Q12-2. What is the "fire point" of a substance?

Q12-3. What is the "flash point" of a substance?

Q12-4. What are the four classes of fire?

Q12-5. What are the primary fire-extinguishing agents used aboard naval ships?

FIRE-FIGHTING EQUIPMENT

LEARNING OBJECTIVE: Recognize the various systems and equipment used for aircraft fire-fighting on board ships and shore activities.

In assisting the crash fire fighters, you will use very specialized equipment. A crash crew must bring its equipment into action with every pump nozzle delivering at its maximum capacity. Fire-fighting equipment is discussed in the following text.

FIREMAIN SYSTEM

You must get acquainted with the firemain system throughout your ship. You should know the location of the firemain and the riser piping that carries water to the upper decks. You must be able to identify the plugs where hoses can be attached to the mains. You must know the location of all pumps, valves, and controls in the vicinity of your duty and berthing stations.

Fireplugs have outlets either 1 1/2 or 2 1/2 inches in diameter. Some plugs are equipped with wye gates that provide two outlets, each are 1 1/2 inches in size. In some cases, a reducing connection is used so that a 1 1/2-inch hose can be attached to a 2 1/2-inch outlet.

Connected to the fireplugs and stored in adjacent racks are two lengths of either 1 1/2- or 2 1/2-inch diameter hose. The 1 1/2-inch hose is used on smaller ships and below decks on larger ships. This hose is made up in 50-foot lengths, with the necessary end

couplings. All threaded parts of fire hose fittings and couplings have standard threads and are easy to connect. Hoses and fittings 1 1/2 inches and below have standard pipe threads. Those 2 1/2 inches and over have standard Navy hose threads.

Two people working together can quickly prepare a fire hose. You can do the job alone if you place the hose on the deck and hold it down with your foot just behind the fitting. The pressure of your foot will cause the metal fitting on the end of the hose to point upward. In this position you can screw in the nozzle or other fitting.

Fire hose is usually located on a bulkhead rack near a fireplug. Nozzles, extensions called applicators, and spanner wrenches are stowed on the bulkhead near the hose. See figure 12-4. When two lines are located separately on the bulkhead, one is connected to the firemain and the other is left unconnected.

HIGH-CAPACITY AFFF SYSTEMS

An AFFF station consists of a 600-gallon AFFF concentrate tank, a single-speed injection pump or a two-speed AFFF pump, electrical controllers, valves, and necessary piping. Saltwater and AFFF flow is controlled by hydraulically operated valves, which are actuated by solenoid-operated pilot valves (SOPVs). The SOPVs are activated by electrical switches at user locations (Pri-Fly, NAVBRIDGE, hose stations, and CON-FLAG stations).

The injection pump system supplies the flush deck nozzles on the flight deck, and the deck edge nozzles on CVNs and some CVs. The two-speed pump operates at 27 or 65 gpm, depending upon the demand. The low-rate output will supply handlines and small sprinkler systems. High-demand systems, such as hangar bay sprinklers, are served by the high-speed output. On selected CVs, the two-speed pump supplies the deck edge nozzles.

Hangar Deck AFFF Sprinkler System

The AFFF sprinkler systems are installed in the overhead of the hangar deck. The sprinkler system is divided into groups that can be individually actuated. Each group is supplied from two risers—one from a port AFFF injection station and one from a starboard AFFF injection station. Controls to start and stop flow to individual sprinkler groups are located in the conflagration (CONFLAG) stations and along each side of the hangar deck near the related sprinkler group.

Flight Deck AFFF Extinguishing System

Flight decks have an AFFF fire-fighting system that consists of flush-deck, flush-deck cannon-type, and deck-edge nozzles installed in combination with the

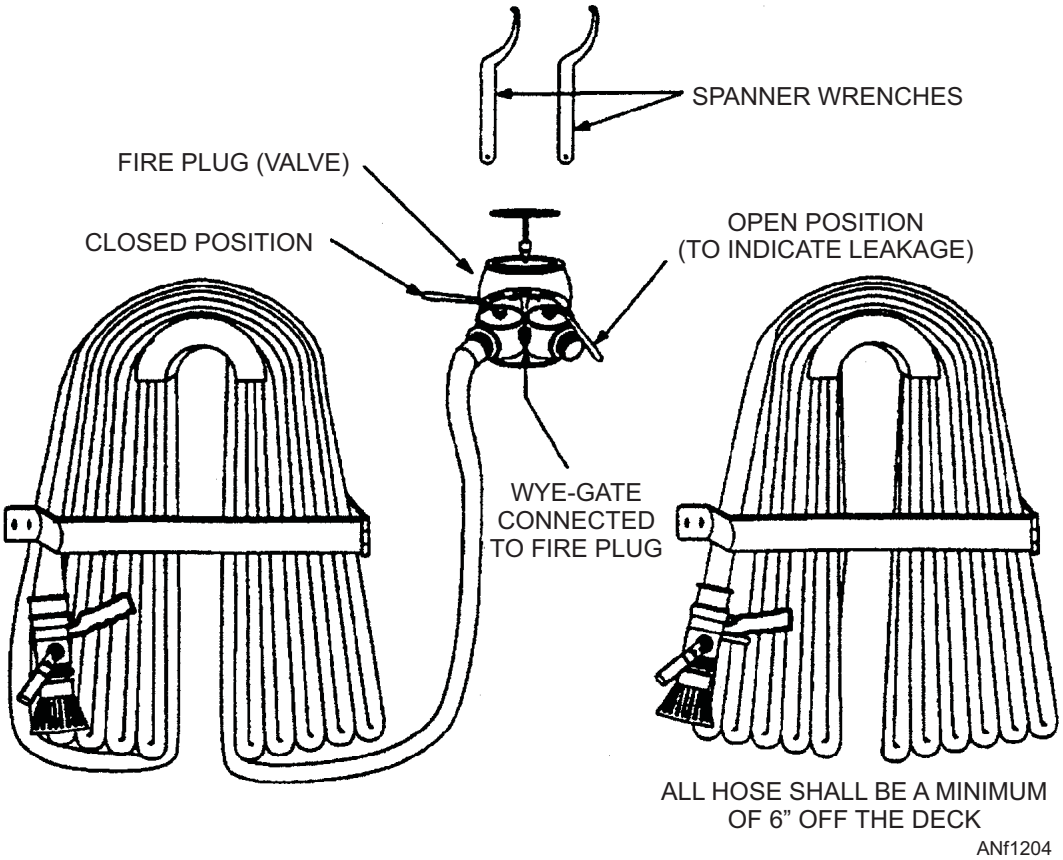

Figure 12-4.—Typical fire hose station.

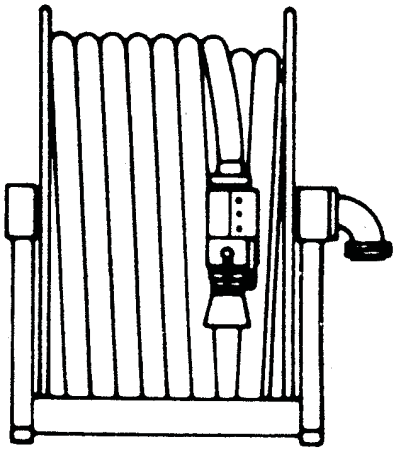

Anf1205

Figure 12-5.—AFFF hose reel.

saltwater washdown system. AFFF from the concentrate tank is injected into the saltwater (injection point is on the 03 level just downstream of the saltwater control valve) via a positive displacement pump, usually 60 gpm. This injection pump serves the flush-deck and cannon-type nozzles. Deck edge nozzles may be served by the AFFF two-speed pump system or single-speed injection pump system.

Controls for the flight deck fixed fire-extinguishing system are located in both Pri-Fly and on the navigation bridge. The controls allow for selection of saltwater AFFF or system shutdown.

AFFF Hose Reel Station

Hangar bay AFFF hose outlets are located port and starboard near the AFFF injection stations from which they are supplied. A push-button control is located adjacent to each AFFF hose station. The station has a 1 1/2-inch hose reel and one 2 1/2-inch hose outlet (fig. 12-5).

Flight deck AFFF hose outlets are located in catwalks and near the island. The station has one reel of 1 1/2-inch hose and/or one 2 1/2-inch hose outlet or two 2 1/2-inch hose outlets with hose and nozzle preconnected to each outlet. A push-button control, X50J phone circuit box, and E call button are located next to each AFFF hose station. There is emergency lighting at each hose reel station. The controls are located in Pri-Fly and on the NAVBRIDGE.

PORTABLE FIRE-FIGHTING EQUIPMENT

As you become more familiar with aircraft fire-fighting tactics and equipment, you will become more familiar with the many different types of portable equipment that the fire fighter uses to combat and contain aircraft fires. Some of the equipment you will use is discussed in this section.

Vari-Nozzles

Vari-nozzles are used on all AFFF and saltwater hose lines. Flow rates are 250 gpm for all 2 1/2-inch hose lines. Nozzles on 1 1/2-inch AFFF hoses on flight and hangar decks are the 125 gpm units. Nozzles on the 1 1/2-inch saltwater lines and those used with AFFF in-line inductors are 95 gpm models. All nozzle gpm flow rates are based on 100 psi pressure at the nozzle inlet. See figure 12-6.

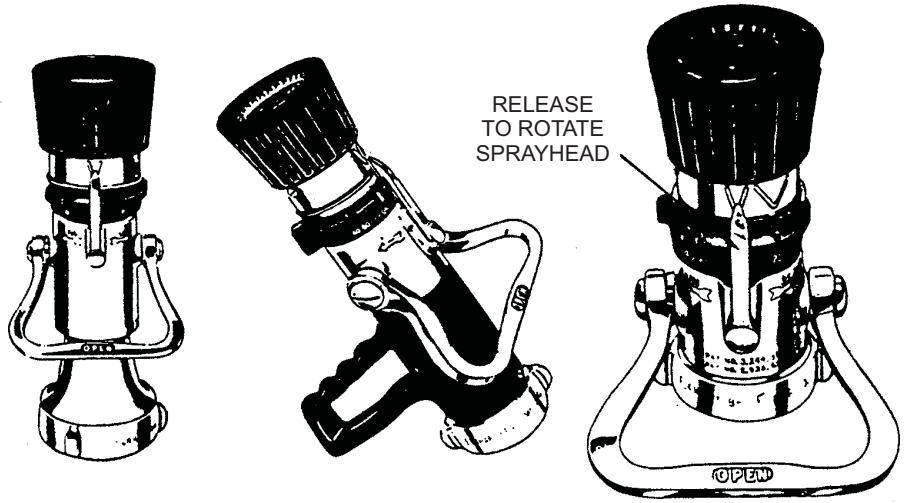

Anf1206

Figure 12-6.—Examples of variable-stream fog nozzles.

Hoses

The standard Navy fire hose is a double jacketed, synthetic fiber with a rubber or similar elastomeric lining. The outer jacket is impregnated to increase wear resistance. The impregnating material contains an orange colored pigmentation for easy identification. Navy fire hose comes in 50-foot lengths and has a maximum operating pressure of 270 psi. Optimum hose handling occurs between 90 and 150 psi. Pressure above 150 psi is hazardous because excessive nozzle reaction force may result in loss of nozzle control.

Noncollapsible rubber hose for the AFFF hose reel system is available in 3/4-inch and 1 1/2 inch size. The length of these hoses varies in size depending upon application and location.

Tools

A fire fighter's tool kit should contain the following tools.

- Large claw tool; small claw tool
- Crowbar
- Parachute knife
- Pliers; screwdriver
- Wrench
- Hacksaw; metal saw
- Chisels
- Flashlight
- Carpenter's hammer; maul
- Bolt cutters
- Notched ax

NAVAIRSYSCOM developed what is called an aircraft tool kit (fig. 12-7) for crash trucks. The station fire chief must ensure that one of these kits is carried on

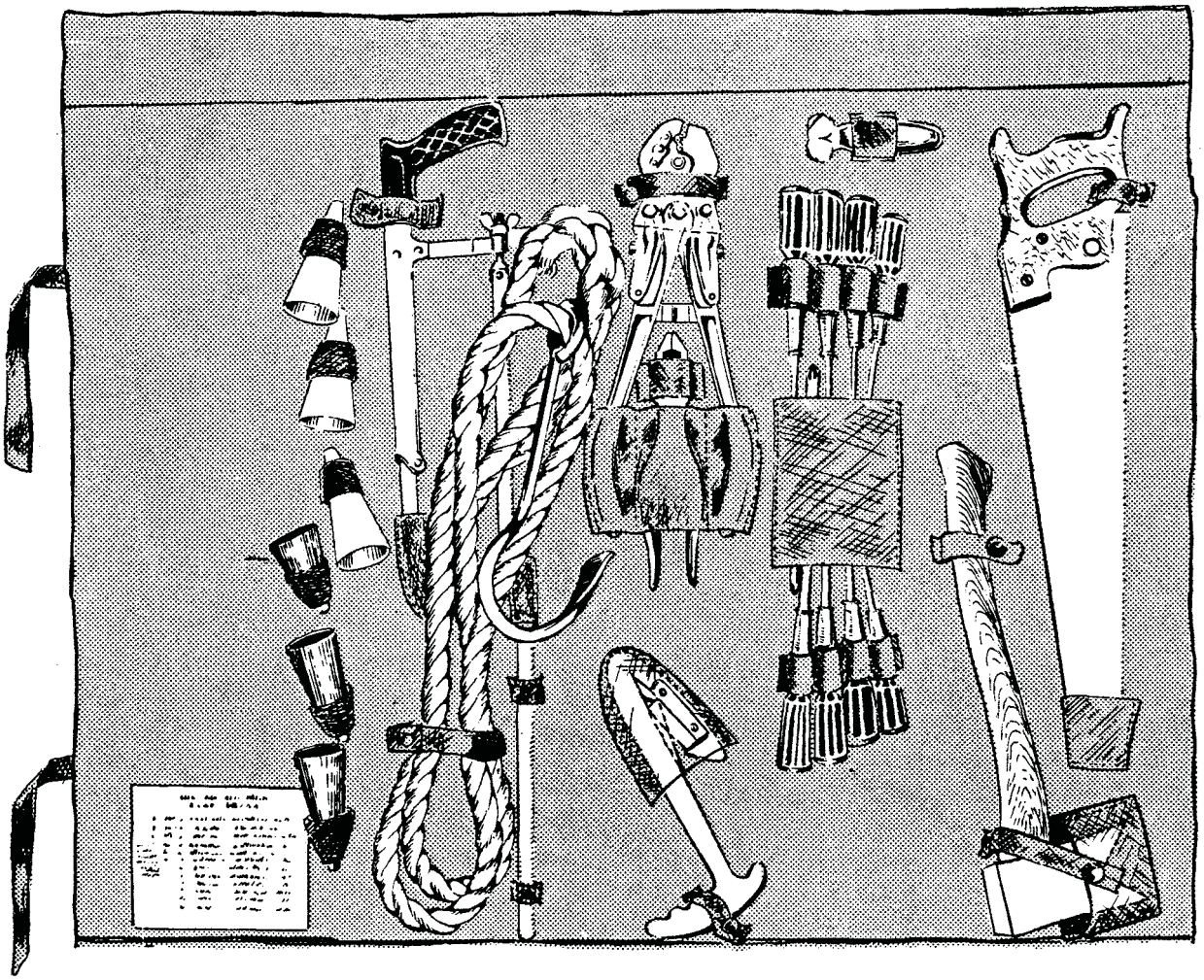

Anf1207

Figure 12-7.—Crash rescue tool kit.

each of the crash trucks assigned to the fire-fighting crew. The kit consists of a canvas tool roll with pockets or holders for specified tools. The crash kit contains tools for forced entry. Fire fighters use these tools in rescuing occupants trapped in aircraft. The kit contains three tapered, hard-rubber plugs and three hardwood plugs. These plugs are used to stop fuel tank leaks.

PROTECTIVE CLOTHING

Aircraft fire-fighting/rescue protective clothing is a prime safety consideration for personnel engaged in fire-fighting and rescue work. Aluminized protective clothing offers a means of providing protection to fire fighters because of its high percentage of reflectivity to radiant heat. Aluminized proximity fabrics have been adopted for use in the Navy Mishap/Rescue Program. It is important to point out that these garments are not classified as entry suits, but are known as proximity clothing to be worn with fire fighter's knee-length boots that have safety toes and soles.

Care and Maintenance of Protective Clothing

The heat-reflective ability of aluminized clothing is reduced when the clothing is stained or otherwise soiled. Therefore, you **must** give careful attention the care and maintenance instructions for protective clothing. Some guidelines are as follows:

1. Store clothing on hangers, with suitable hanging space to prevent aluminized fabrics from creasing or cracking. If the garment is folded, the folds should be loose. Do not sit on a folded garment.

2. Sponge off dirt and soot by using mild soap and water. Dry aluminum surfaces with a clean cloth. Rub gently to avoid removal of the aluminum.

3. Remove grease stains by using dry-cleaning solvents. (**NOTE**: Isopropanol or perchloroethylene will react with the metal in proximity suits and may etch the aluminum surface.) Clean the clothing with water and wipe dry. Allow the garment to hang in a ventilated location at room temperature.

4. Remove AFFF by sponging the clothing clean with mild soap and water. Hang the garment to dry in the open or in a place with good circulation. During fire-fighting operations, it is not always possible to prevent fire-fighting agents from getting on protective clothing. However, aluminized protective clothing that has been covered or spotted with agents will have less heat-reflecting ability than the suit normally would provide.

5. Corrosive chemicals will react with the aluminum surface and may etch the metal. Clean the clothing with water and wipe it dry. Allow it to hang in a ventilated location at room temperature.

6. Replace garments when the aluminum wears off or when the fabric cracks or tears. Spraying worn clothing with aluminum serves no useful purpose and is a dangerous practice.

Care of Facepiece

The gold-coated facepiece is a heat-reflective shield. The facepiece is NOT a sun shield. This item should be kept in excellent condition to maintain the radiant-heat-reflective efficiency. When the gold surface of the facepiece becomes worn, scratched, or marred, 90 percent of the heat protection is lost, and you should immediately replace the facepiece. Other precautions you should take with facepieces are as follows:

1. Keep the protective cover in place when you are carrying or storing the hood to minimize damage to the gold-coated surface. Remove it when using the hood.

2. For adequate protection, replace a worn gold-coated facepiece. When wearing the facepiece, make sure the gold surface is on the outside as marked on the edge.

3. Avoid touching or wiping the gold surface as much as possible.

4. Clean the facepiece, without removing it from the hood, by using a clean, soft cloth with mild soapy water, and then rinse and pat dry.

Q12-6. What size diameter are the fireplug outlets aboard ship?

Q12-7. Where is the AFFF sprinkler system installed on the hangar deck?

Q12-8. What length is a standard Navy fire hose?

Q12-9. What type of protective clothing offers protection to fire fighters because of its high percentage of reflectivity to radiant heat?

AIRCRAFT FIRE-FIGHTING AND RESCUE VEHICLES

LEARNING OBJECTIVE: Recognize the types of fire-fighting and rescue vehicles used aboard ship.

The Navy uses different types of trucks. The use depends on the base, type of aircraft assigned, and anticipated types of fires. Some of the trucks used by the Navy are the Oshkosh T-3000, the P-4A vehicle, the P-19 fire-fighting truck, and the P-25 shipboard fire-fighting truck. Shore-based Twinned Agent Units (TAUs) and Shipboard Twinned Agent Units (SBTAUs) are also used.

OSHKOSH T-3000

The Oshkosh T-3000 (fig.12-8) is a diesel-powered, six-wheeled-drive truck with an automatic transmission. The operator controls consist of power-assisted steering, air or mechanical brakes, transmission range selector, and in-cab controls for operating the fire-fighting system. The water storage tank has a capacity of 3,000 gallons; the AFFF concentrate tank holds 420 gallons. The roof turret has a discharge rate of 600 to 1,200 gpm and an infinitely variable pattern from straight stream to fully dispersed. The bumper turret is electric joystick controlled with auto-oscillation. The discharge rate is 300 gpm and it is also variable pattern. Two 15-foot, 1 3/4-inch preconnected handlines are provided, one per side. The handlines have a discharge rate of 95 gpm and have a pistol grip with variable pattern.

P-4A VEHICLE

The P-4A vehicle (fig. 12-9) is diesel powered with an optional all-wheel drive. It has a six-speed, semiautomatic, power shift transmission. The operator's controls has power-assisted steering, air-over-hydraulic power boost brakes, transmission range selector, and in-cab controls for operating the vehicle's fire-fighting systems.

The water storage tank has a capacity of 1,500 gallons. The AFFF concentrate pumps (centrifugal) are powered by the truck engine by means of power dividers. The concentrate and water are carried to each of the discharge points in separate lines and are mixed in venturi inductors before discharge. The P-4A is provided with a manually maneuvered, 750-gpm constant-flow, variable-stream roof turret.

The P-4A is also provided with a 250-gpm bumper turret mounted in front of the cab and controlled hydraulically from within the cab. The handline is mounted in front center of the vehicle in a compartment

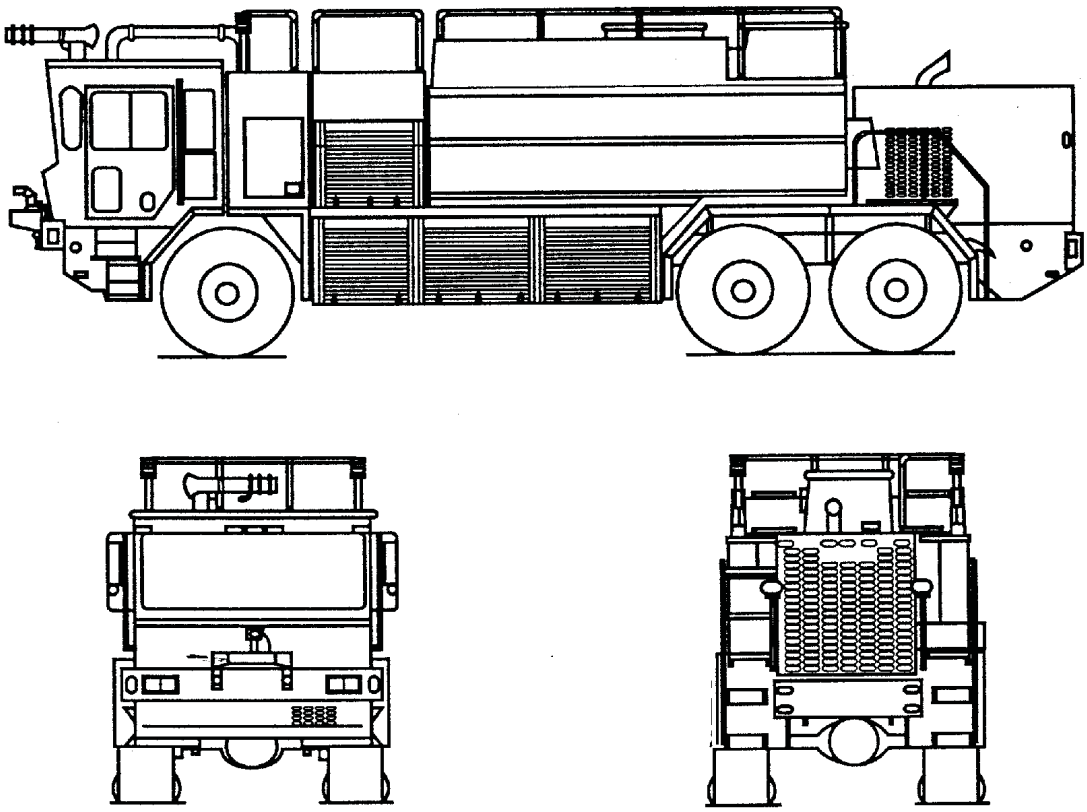

Figure 12-8.—T-3000 aircraft fire-fighting rescue vehicle.

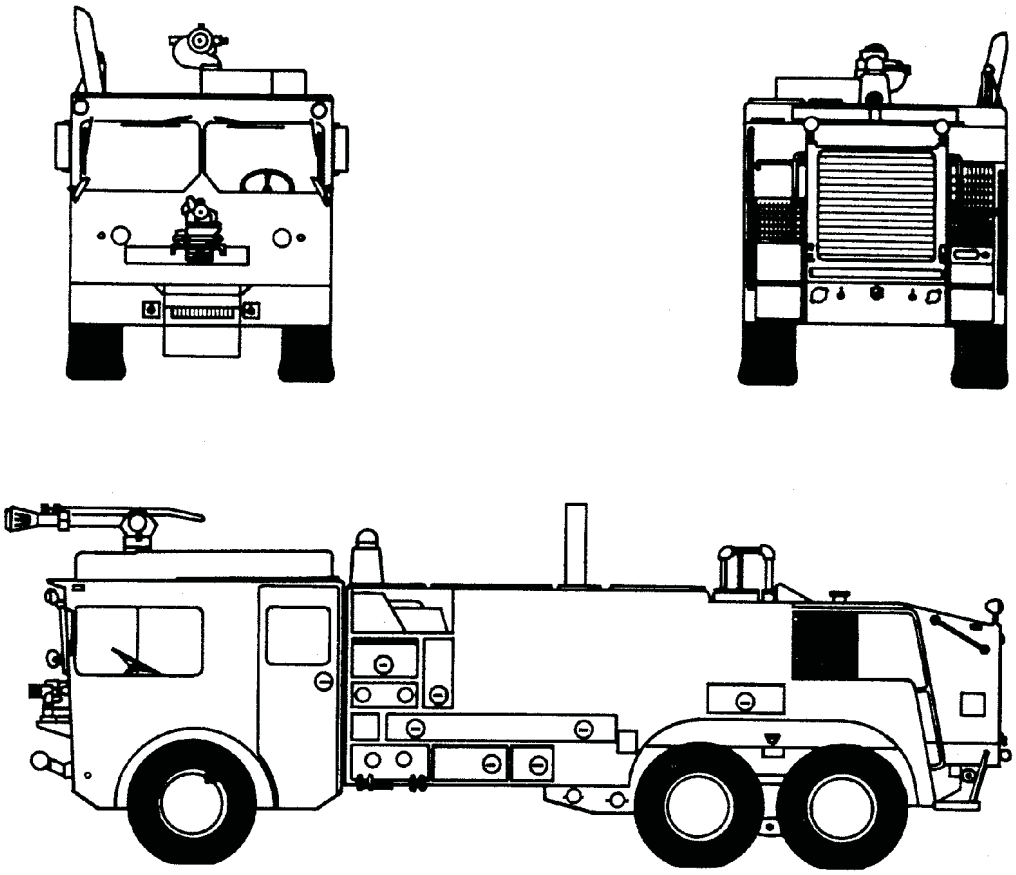

Figure 12-9.—P-4A aircraft fire-fighting and rescue vehicle.

under the cab. The reel is provided with 150 feet of 1 1/4-inch-diameter hose. The handline has a 75 to 100 gpm discharge capacity. An air motor provides for powered rewind. Four 30-pound PKP dry-chemical fire extinguishers are provided with each vehicle. When both the roof turret (750 gpm) and the bumper turret (250 gpm) are operating, the truck depletes its self-contained water supply in 1 1/2 minutes.

P-19 FIRE FIGHTING TRUCK

The P-19 has a diesel-engine-powered, 4 × 4, all-wheel-drive chassis. A single diesel engine powers the truck drive train and water pump. The fire-fighting systems of the truck are self-sufficient. No outside source for extinguishing agents is needed. The truck contains its own pressure pumps and fire-fighting equipment. Water, foam, and Halon 1211 are carried in tanks built into the truck body. The truck body is insulated, which prevents heat loss from the truck's interior during cold weather. The insulation also provides protection from fire heat.

Water or a combination of water and foam can be used to put out a fire. Agents are delivered through the cab-mounted roof turret, the bumper turret, or the handline. These can be used alone or at the same time. The Halon system uses its own handline. The chassis design allows the truck to operate in all kinds of weather and on off-road terrain.

The P-19 has a water capacity of 1,000 gallons, and the foam tank holds 130 gallons. The single-roof turret has a discharge capacity of 500 gpm, and the bumper turret discharges agent at 250 gpm.

AFFF can be applied by using a 100-foot, 1-inch-diameter (60-gpm), reel-mounted handline. Five hundred pounds of Halon 1211 is also available on another 100-foot-long, 1-inch-diameter, reel-mounted handline.

A/S32P-25 SHIPBOARD FIRE-FIGHTING VEHICLE

The P-25 shipboard fire-fighting vehicle (figs. 12-10 and 12-11) is a 4-wheel (2-wheel drive), 6

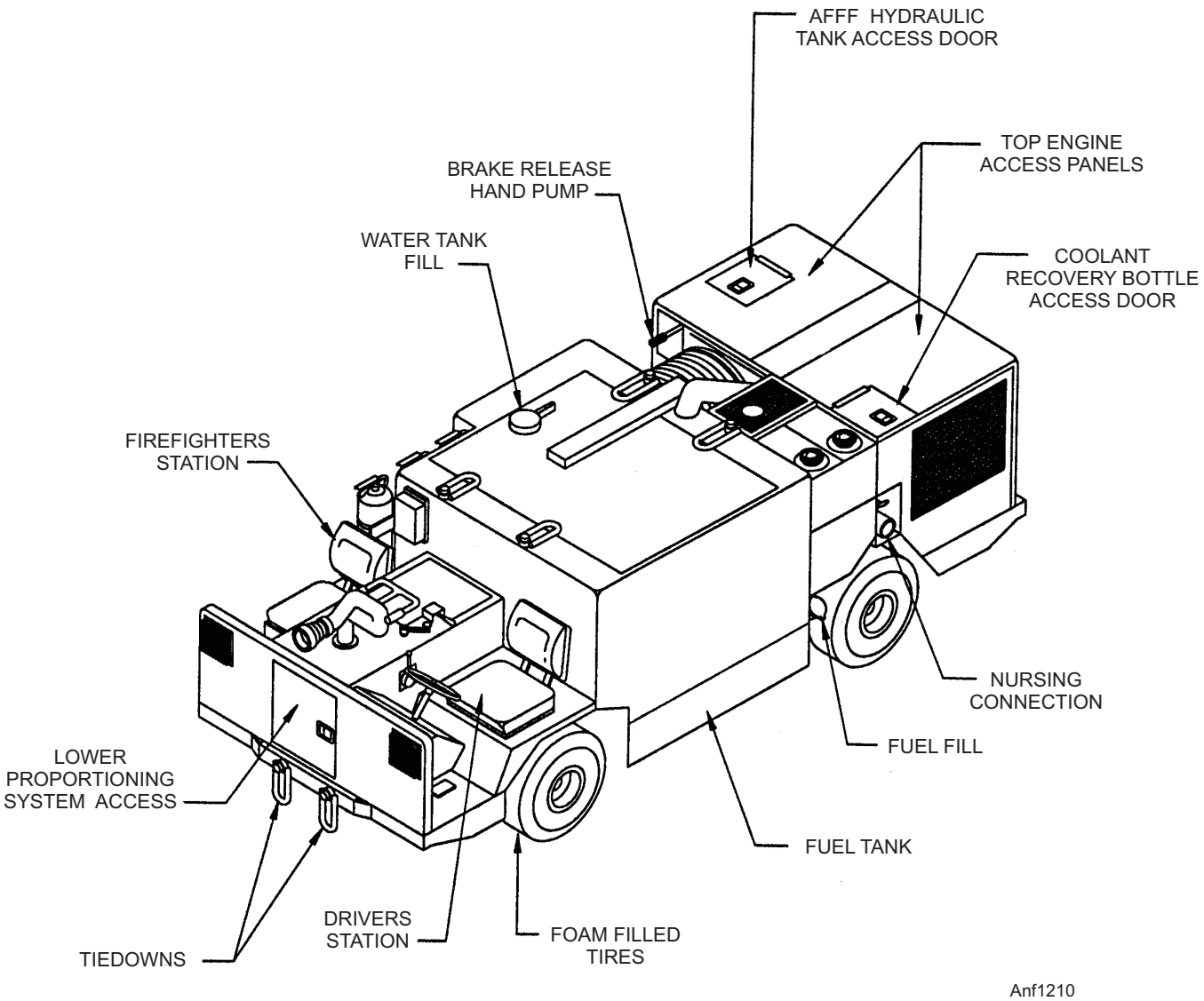

Figure 12-10.—A/S32P-25 shipboard fire-fighting and rescue vehicle—major assemblies and components (left side).

cylinder, turbocharged, liquid cooled, 24-volt, diesel-powered vehicle, with a hydrostatic drive system that transmits power to the rear wheels. Steering is preformed by a single hydraulic cylinder and tie rod assembly that controls the front wheels. Dynamic vehicle braking is provided by the hydrostatic drive system. When the accelerator is released, the brakes automatically engage. Separate tanks within the vehicle chassis carry 750 gallons of water and 55 gallons of AFFF (Aqueous Film-Forming Foam). Three 20-pound fire extinguishers containing HALON 1211 (Halogenated Extinguishing Agent) are stored on the right side of the vehicle. One nursing line connection on each side of the vehicle provides AFFF mixture from the ship's system directly to the vehicle's water pump.

The vehicle has seating for a crew of two. The driver compartment is located at the left forward end of the vehicle and contains the main control panel for activating the fire-fighting systems. AFFF can be sprayed from both the forward turret nozzle and handline hose reel nozzle. These nozzles operate independently and can be used simultaneously to make this vehicle ready for fire-fighting duty.

TWINNED AGENT UNIT (TAU-2H)

The Twinned Agent Unit (TAU-2H) fire extinguisher is a dual-agent apparatus that is designed primarily for extinguishing class B fires, and it is employed aboard ship and at shore facilities. The TAU-2H is normally located at hot refueling sites, or it

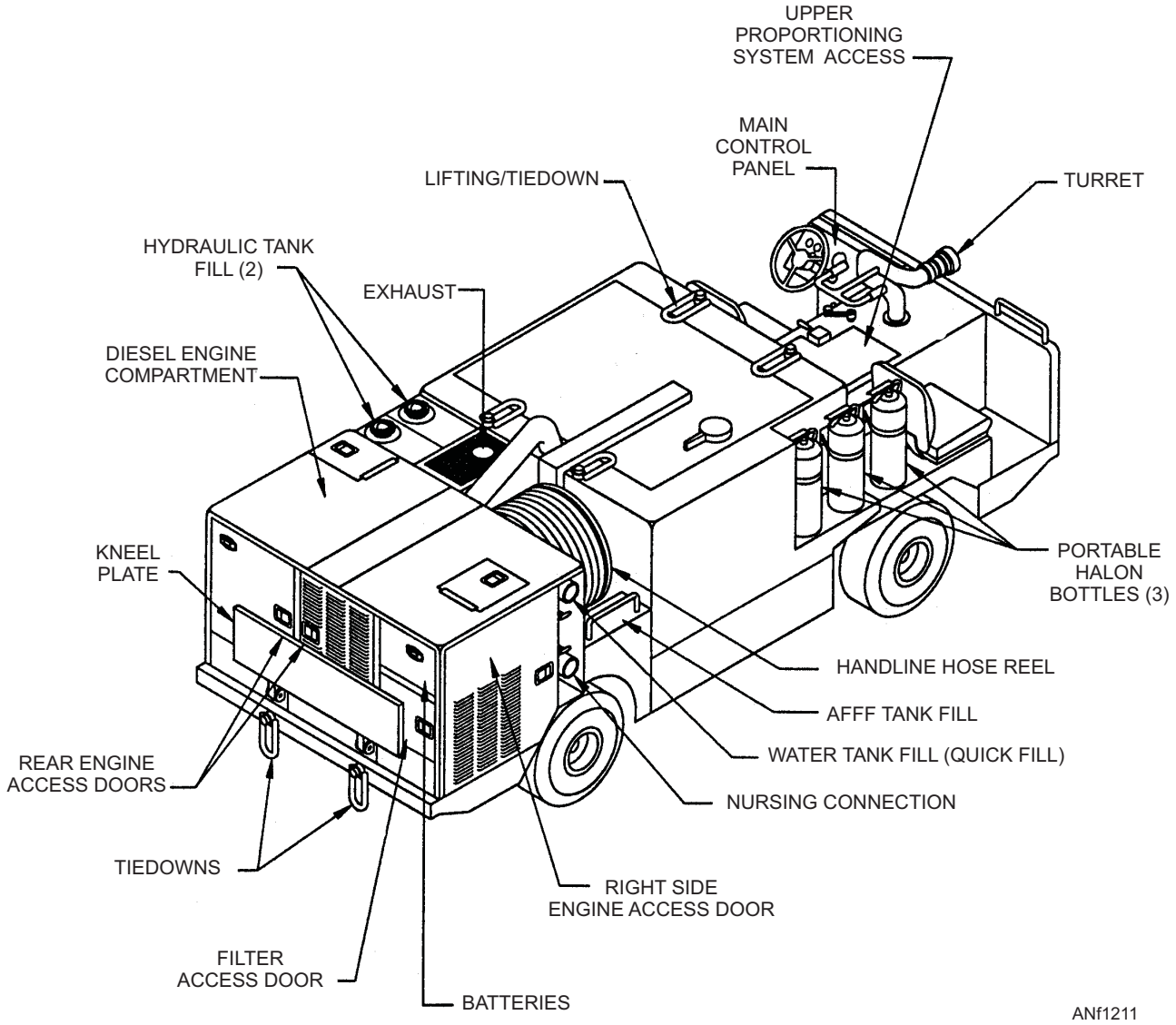

Figure 12-11.—A/S32P-25 shipboard fire-fighting and rescue vehicle—major assemblies and components (right side).

can be vehicle-mounted. The TAU-2H is a self-contained unit with two agent tanks—one containing 86 gallons of AFFF premixed solution and the other containing 200 pounds of Halon 1211. The system permits use of the fire-fighting agents either separately or simultaneously.

The TAU-2H (fig. 12-12) employs a noncollapsible dual hose line encased in a fire-resistant cotton jacket. The hose line is normally mounted on a reel. The fire-extinguishing agents are propelled by nitrogen supplied from two pressurized cylinders, which are mounted on the framework. The twinned nozzles on the handline expel the fire-fighting agents. The Halon nozzle is equipped with a low-reaction discharge tip. The AFFF nozzle is equipped with a aspirating tip. Duel pistol grip handles and triggers operate the shutoff valves. Extinguishment is obtained by applying agents in a sweeping motion, using the chemical agent Halon 1211 to gain initial extinguishment, followed by application of AFFF to blanket the combustible liquid and preclude reignition.

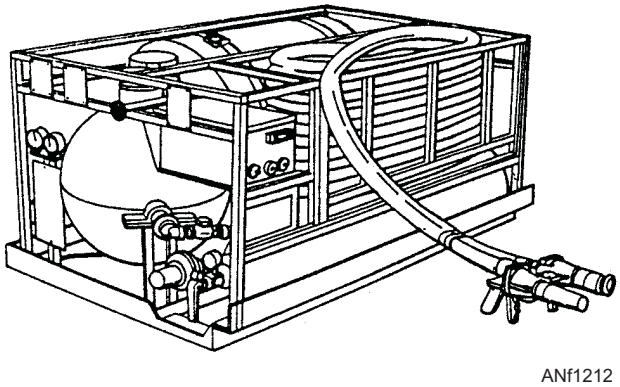

Figure 12-12.—TAU-2H twinned agent unit.

Q12-10. What type of aircraft fire-fighting rescue vehicles are used at shore-based activities?

Q12-11. What type of aircraft fire-fighting rescue vehicles are used aboard aircraft carriers?

Q12-12. What type of fire-fighting agents are contained in the Twinned Agent Unit (TAU-2H)?

AIRCRAFT FIRE HAZARDS

LEARNING OBJECTIVE: Identify the different hazards associated with aircraft fires, and recognize aircraft fluid line identification markings.

Not every crash results in fire. The responsibility of the crash fire fighter does not end when fire fails to occur. Serious actual and potential fire hazards may have been created, which you must eliminate or minimize without delay.

The greater the damage to the aircraft, the greater the possibility of fuel spillage. A spark or a hot engine part could ignite fuel vapors and set off a full-fledged fire. You should take every precaution to guard against accidental ignition. Personal laxity or unfamiliarity with ordinary preventive measures could allow a delayed fire to occur, which could endanger personnel.

FLAMMABLE, HAZARDOUS, AND FIRE ACCELERATING MATERIALS

Accelerating materials carried on aircraft are of major concern to the aircraft rescue and fire-fighting crews. Aviation gasoline (AVGAS), jet fuels (JP-4, JP-5, and JP-8), engine oils, oxygen systems, and hydraulic fluids constitute problems in aircraft fire-fighting. Some of these fuels have restrictions as to where they can be used; for example, JP-4 is prohibited aboard ship due to its flash point.

CAUTION

Under aircraft crash impact conditions where fuel-air mixtures or mists are created, all fuels are easily ignited.

Aviation Gasoline (AVGAS)

The flash point (by closed cup method at sea level) of AVGAS is -50°F (-46°C). The rate of flame spread has also been calculated to be between 700 and 800 feet per minute.

JP-4 Fuel

JP-4 jet fuel is a blend of gasoline and kerosene and has a flash point from -10°F (-23°C). The rate of flame spread has also been calculated to be between 700 and 800 feet per minute.

JP-5 Fuel

JP-5 fuel is a kerosene grade with a flash point of 140°F (60°C). The rate of flame spread has been calculated to be in the order of 100 feet per minute. The lowest flash point considered safe for use aboard naval vessels is 140°F (60°C).

FUEL TANKS

When an aircraft crashes, the impact usually ruptures the fuel lines and fuel tanks. Ordinarily, all the fuel is not liberated at once. There is a source of fuel that is supplying the fire either from the rupture in the tank or from the loosened and ruptured fuel lines in the accessory section of the engine.

The control of the fire around the fuselage section under these conditions presents a very complex problem. The top portion of the tank is more void of liquid than any other section of the tank. Because of the restraining cushion of the liquid itself, the explosive force will be directed upward instead of downward or on a horizontal plane.

Fuel loads can vary from 30 gallons in small aircraft to approximately 50,000 gallons in large jet aircraft. Fuel tanks are installed in a variety of places within the aircraft structural framework or as a built-in part of the wing. Fuel tanks are often carried under the floor area in the fuselage of helicopters. You should refer to *NATOPS U.S. Navy Aircraft Emergency Rescue Information Manual*, NAVAIR 00-80R-14-1, for the exact location of fuel tanks on a particular aircraft. Upon severe impact these tanks generally rupture and result in fire. Many naval aircraft are provided with external auxiliary fuel tanks located under the wings and fuselages.

The aircraft manufacturers conducted a number of tests on external aircraft fuels tanks in which they were exposed to an enveloping fuel fire. These studies show that there were no deflagrations. The tanks did melt or rupture, releasing fuel onto the decks. The time to fuel tank failure (release of fuel) was dependent on the percent of fuel in the tank and ranged from 28 seconds for a 10-percent load to 3 1/2 minutes for a 100-percent load.

There is so little difference in the heat of combustion of the various aircraft hydrocarbon fuels that the severity after ignition would be of no significance from the "fire safety" point of view. The fire-fighting and control measures are the same for the entire group of aviation hydrocarbon fuels.

OXYGEN SYSTEMS

Oxygen systems on aircraft can present hazardous conditions to fire fighters during an emergency. Liquid oxygen is a light blue liquid that flows like water and is extremely cold. It boils into gaseous oxygen at -297°F (-147°C) and has an expansion rate of approximately 860 to 1. Liquid oxygen is a strong oxidizer, and although it is nonflammable, it vigorously supports combustion.

GENERAL HAZARDS

During aircraft fire-fighting operations personnel are constantly in harms way, from the actual fire-fighting operations to the salvage and clean-up operations. All components and material in or on the aircraft are considered hazardous to personnel. The following text discusses a few of the hazards that personnel need to be familiar with.

Anti-icing Fluids

Anti-icing fluids are usually a mixture of about 85-percent alcohol and 15-percent glycerin. While not as great as other aircraft hazards, you should remember that alcohol used in aircraft anti-icing systems burns with an almost invisible flame. The best method of control is by dilution with water.

Class A Combustibles

Class A combustibles in aircraft fires are best extinguished with AFFF. When aircraft cockpit and interior finish materials are burned or charred, they produce toxic gases. These gases include carbon monoxide, hydrogen chloride, and hydrogen cyanide. Therefore, it is necessary that fire-fighting and rescue personnel who enter an aircraft during a fire sequence be equipped with a self-contained breathing apparatus.

Ordnance

Naval aircraft carry a wide variety of ordnance in support of their assigned missions. For more information on the characteristics and cook-off times of ordnance, refer to chapter 8 of this manual and *NATOPS, U.S. Navy Aircraft Firefighting and Rescue Manual,* NAVAIR 00-80R-14, chapter 2.

Flare Dispensers

The SUU-44/SUU-25 flare dispensers carry eight Mk 45 or LUU-2 paraflares. When the flares are ejected from the dispenser and the tray separates, they must be considered fully armed. Once the tray separates from the flare, it ignites a fuse on the Mk 45 flare, which will fire within 5 to 30 seconds. The LUU-2 flare uses a simple mechanical timer instead of an explosive fuse. If ignited, the Mk 45 or LUU-2 candle should be extinguished by inserting a water applicator tip into the burning end of the candle, applying low-velocity fog. The flare will normally extinguish in less than 30 seconds. If a fog applicator is not readily available, an alternate method is to have a fully outfitted fire fighter cut the shroud lines, pick up the flare by the cold end, jettison it over the side, or remove it to a clear area if ashore.

Batteries

Alkaline or nickel-cadmium batteries may get hot from internal shorting or thermal runaway. The overheated battery is hazardous to both aircraft and personnel. When an overheated battery is detected, the crash crew should open the battery compartment, check for the following conditions, and take the action indicated:

1. When flame is present, use available extinguishing agent, such as Halon 1211 or CO_2.

WARNING

Halon 1211 or CO_2 is an acceptable fire-extinguishing agent once a fire has developed. CO_2 must not be directed into a battery compartment to effect cooling or to displace explosive gases. Static electricity generated by the discharge of the extinguisher could explode hydrogen or oxygen gases trapped in the battery compartment.

2. When the battery is emitting smoke, fumes, or electrolyte in the absence of flame or fire, make sure the battery switch in the cockpit is in the OFF position. Remove the quick disconnect from the battery and, if possible, move the battery clear of the aircraft. Use water fog to lower the battery temperature.

WARNING

When approaching a battery that is in a thermal runaway condition, aircraft rescue fire-fighting personnel must work in teams of two and must be attired in full protective clothing, with extinguishing agent available for instant use.

COMPOSITE MATERIALS

The following text discusses the advantages and disadvantages of using composite materials in aircraft construction.

WARNING

Inhalation of composite fibers resulting from aircraft fires and/or aircraft material damage may be harmful to personnel. Respiratory protection must be worn when personnel are exposed to these potential hazards.

Composite Materials Reinforced with Carbon/Graphite Fibers

Composite materials that are reinforced with carbon/graphite fibers provide superior stiffness, a high strength-to-weight ratio, and ease of fabrication. As a result, this material is being used extensively in advanced aircraft, such as the AV-8 *Harrier*, to replace heavier metal components. Unfortunately, carbon or graphite fibers can be released into the atmosphere if their epoxy binder burns. Once free, these small lightweight fibers can be transported up to several miles by air currents and, because of their high electrical conductivity, can damage unprotected electrical/electronic equipment.

Until such time as more information is known, aircraft crash and fire-fighting units must attempt to extinguish fires involving carbon-fiber-reinforced composites as quickly as possible and to provide maximum containment of the aircraft debris. The containment and cleanup function is extremely important and must be treated as a special hazard prevention measure. Accordingly, the practices for extinguishing, containment, and cleanup, as stated in paragraph 6.7 of *NATOPS, U.S. Navy Aircraft Firefighting and Rescue Manual*, NAVAIR 00-80R-14, should be observed when an aircraft crash/fire incident occurs that involves any aircraft that contain carbon-graphite fiber composites. Any aircraft incident involving fire on these types of aircraft must be considered to have potential contamination hazards until positively identified to the contrary.

Composite Materials Reinforced with Boron/Tungsten Fibers

Composite materials reinforced with boron fibers also provide superior stiffness, a high strength-to-weight ratio, and ease of fabrication. This material is being used in advanced aircraft, such as the F-14, F-15, and F-16, to replace heavier metal components. Unfortunately, boron fibers can be released if their epoxy binder burns. Boron fibers pose less of a problem to unprotected electrical equipment than carbon or graphite fibers, because boron fibers are much heavier and are less likely to become airborne. Also, boron fibers are much less electrically conductive. However, loose boron fibers are stiff and sharp, and thus pose handling problems. The extinguishing, containment, and cleanup practices for boron fibers are the same as those previously outlined for carbon or graphite fibers.

AIRCRAFT FIRE AND PERSONNEL HAZARDS

Not every crash results in fire. The responsibility of the crash fire fighter does not end when fire fails to occur. Serious actual and potential fire hazards may have been created, which must be eliminated or minimized without delay.

The greater the damage to the aircraft, the greater the possibility of fuel spillage. A spark or a hot engine part could ignite fuel vapors and set off a full-fledged fire. You must take all precautions to prevent accidental ignition. Personal laxity or unfamiliarity with ordinary preventive measures can cause a delayed fire, which could endanger personnel who would otherwise survive a disaster.

Engine Accessory Section

The most common source of crash fires is the engine compartment, particularly the accessory section. Take steps to prevent ignition of fuel vapors by hot exhaust stacks and collector rings. CO_2 discharged through the cooling flaps, air scoop, or inspection doors is an effective precaution. CO_2 will cause no damage to the engine or its accessories.

Fuel Spills

Fuel spills can be caused by ruptured fuel lines. These spills should be swept clear of the aircraft. Use water streams and follow up with a layer of foam to halt vaporization. An aircraft should NEVER be dragged or moved unnecessarily. There is great danger that friction will ignite the fuel.

Selector Valve

You should know the location of the fuel selector valve on as many types of aircraft as possible. In single-engine aircraft, this valve is usually found on the lower left-hand side of the cockpit. In multiengine aircraft, fuel selector valves for all engines are usually found on one panel. Turn the valve to OFF. It is the primary fuel cutoff valve. The valve is used to select various fuel tanks. In the OFF position, the valve completely separates the source of fuel from the engine.

Battery Switch

Turn the battery switch to OFF. This is the master electrical switch. It is the source of all power to the aircraft electrical system when the engine(s) are not running. Memorize the location of battery switches so you can turn the power off rapidly in emergencies. Disconnect the battery, if possible, as detonators and electrical recognition devices are connected ahead of the master switch. Turning the switch off will not stop the flow of current to these devices.

Armament

Turn gun switches to OFF so there is no chance of firing a gun accidentally. This is one of the first actions taken by fire fighters to prevent fire at the crash scene.

CAUTION

When fighting a fire on an aircraft known to have loaded guns aboard, stay out of the area forward of the guns. If rockets or bombs are in the aircraft, stay clear of them, keep low to the deck, and keep the bombs or rockets cool with water fog or fog foam until they are declared safe.

Ejection Seat

The ejection seat is not normally a fire hazard if fire is not already present. The ejection seat should be disarmed or made safe by qualified personnel. The greatest danger from an ejection seat comes during rescue operations when fire is present.

Hydraulic System

The hydraulic system of a crashed aircraft should be considered a potential hazard. The loss of hydraulic fluid/pressure could cause an unexpected movement of the aircraft. The landing gear could collapse or brakes could release, causing injury to personnel.

FLUID LINE IDENTIFICATION

Many different types of liquids and gases are required for the operation of aircraft. These liquids and gases are transmitted through many feet of tubing and flexible hose. Both liquids and gases are called fluids, and tubing and flexible hose are referred to as lines. The term *"fluid lines"* is used in the following discussion.

Each fluid line in an aircraft is identified by bands of paint or strips of tape around the line near each fitting. These identifying markers are applied at least

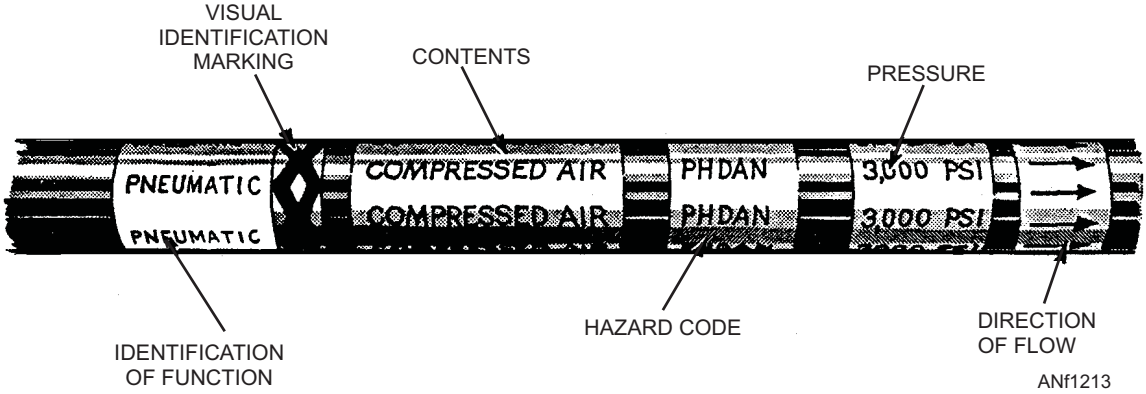

Figure 12-13.—Fluid line identification application.

once in each compartment. Various other information is also applied to the lines.

In most instances, lines are marked by the use of tape or decals. On lines 4 inches and larger in diameter, steel tags may be used in place of tape or decals. On lines in engine compartments, where there is a possibility of tapes, decals, or tags being drawn into the engine intake, paint is usually used.

Identification tape codes indicate the function, contents, hazards, direction of flow, and pressure in the fluid line. These tapes are applied according to MIL-STD-1247. This Military Standard was issued to standardize fluid line identification throughout the Department of Defense. Figure 12-13 shows the application of these tapes as specified by this standard.

The function of a line is identified by the use of a tape. The tape is approximately 1-inch wide, where words, colors, and geometric symbols are printed. Functional identification markings, as shown in MIL-STD-1247, are the subject of international standardization agreement. The function of the line is printed in English across the colored portion of the tape. Three-fourths of the total width on the left side of the tape has a code color. Non-English-speaking people can troubleshoot or maintain the aircraft if they know the color code.

The right-hand, one-fourth of the functional identification tape contains a geometric symbol that is different for every function. This symbol ensures that all technicians, whether colorblind or non-English-speaking will be able to identify the line function. Figure 12-14 is a listing of functions and their associated colors and identification markings as used on tapes.

FUNCTION	COLOR	SYMBOL
FUEL	RED	
ROCKET OXIDIZER	GREEN, GRAY	
ROCKET FUEL	RED, GRAY	
WATER INJECTION	RED, GRAY, RED	
LUBRICATION	YELLOW	
HYDRAULIC	BLUE. YELLOW	
SOLVENT	BLUE, BROWN	
PNEUMATIC	ORANGE, BLUE	
INSTRUMENT AIR	ORANGE, GRAY	
COOLANT	BLUE	
BREATHING OXYGEN	GREEN	
AIR CONDITIONING	BROWN, GRAY	
MONOPROPELLANT	YELLOW, ORANGE	
FIRE PROTECTION	BROWN	
DE-ICING	GRAY	
ROCKET CATALYST	YELLOW, GREEN	
COMPRESSED GAS	ORANGE	
ELECTRICAL CONDUIT	BROWN, ORANGE	
INERTING	ORANGE, GREEN	

ANf1214

Figure 12-14.—Functional identification tape data.

The identification of hazard tape shows the hazard associated with the contents of the line. Tapes used to show hazards are approximately 1/2-inch wide, with the abbreviation of the hazard associated with the fluid in the line printed across the tape. There are four general classes of hazards found in connection with fluid lines.

- Flammable material (FLAM). The hazard marking FLAM is used to identify all materials known as flammables or combustibles.
- Toxic and poisonous materials (TOXIC). A line identified by the word TOXIC contains materials that are extremely hazardous to life or health.
- Anesthetics and harmful materials (AAHM). All materials that produce anesthetic vapors and all liquid chemicals and compounds that are hazardous to life and property.
- Physically dangerous materials (PHDAN). A line that carries material that is asphyxiating in confined areas or is under a dangerous physical state of pressure or temperature. For example, the line shown in figure 12-13 is marked PHDAN because the compressed air is under a pressure of 3,000 psi.

Table 12-1.—Hazards Associated With Various Fluids and Gases

CONTENT	HAZARD
Air (under pressure)	PHDAN
Alcohol	FLAM
Carbon dioxide	PHDAN
Freon	PHDAN
Gaseous oxygen	PHDAN
Liquid nitrogen	PHDAN
Liquid oxygen	PHDAN
LPG (liquid petroleum gas)	FLAM
Nitrogen gas	PHDAN
Oils and greases	FLAM
JP-5	FLAM
Trichloroethylene	AAHM

Q12-13. What aviation jet fuel is prohibited for use aboard ship due to its "flash point"?

Q12-14. What is the preferred fire-fighting agent used to cool an overheated battery in the absence of flame or fire?

Q12-15. What is the purpose of functional identification tape?

AIRCRAFT FIRE-FIGHTING TACTICS

LEARNING OBJECTIVE: Recognize the various fire-fighting techniques based upon the existing emergency conditions.

Aircraft fire-fighting, crash, and rescue techniques are well defined, but no two fire situations will be identical. Success will continue to depend on training, planning, leadership, and teamwork by both ship's company and air wing personnel. Supervisory personnel, fire parties, and squadron personnel should take advantage of every opportunity to drill and acquire knowledge of fixed and mobile fire-fighting equipment available to them. All personnel should become familiar with aircraft configuration, fuel load, weapons load, and fire-fighting techniques of assigned aircraft. The following text discusses procedures recommended for training purposes.

ACCESSORY SECTION, COMPRESSOR COMPARTMENT, OR ENGINE COMPARTMENT OF JET FIXED-WING AND ROTARY-WING AIRCRAFT

CAUTION

When AFFF is used as the fire suppression agent on an aircraft fire and the agent is directed at or ingested into the engine or accessory sections, the fire chief or senior fire official must notify the maintenance officer of the unit involved or, in the case of a transient aircraft, the supporting facility.

Fires in the accessory section, compressor compartment, or engine compartment of jet aircraft result from fuel being introduced into the area between the engine and fuselage, or between the engine and nacelle on engines carried in pods that come into contact with the heat generated by the engine. You must be familiar with these areas to be able to properly apply extinguishing agents. (For more information, refer to NATOPS, *U.S. Navy Aircraft Emergency Rescue Information Manual*, NAVAIR 00-80R-14-1.)

Halon 1211 or CO_2 are the extinguishing agents used on these fires. However, when a fire in an aircraft cannot be extinguished with Halon 1211 or CO_2, the use of AFFF to prevent further damage outweighs the disadvantages.

Internal Engine Fires

Internal engine fires usually result when residual fuel is dumped into the engine on shutdown. When starting equipment and qualified starting personnel are immediately available, these fires may be controlled by windmilling the engine. If this procedure fails or if the equipment and personnel are not available, an extinguishing agent must be directed into the engine. Halon 1211 or CO_2 is the primary agent for internal fires. Application of Halon 1211 or CO_2 must be accomplished at a distance so that the Halon 1211 or CO_2 enters the fire area in gaseous form.

CAUTION

When CO_2 or Halon 1211 is expelled directly into an engine, thermal shock may result, causing engine damage. High bypass turbofan engines require unique techniques to extinguish engine core fires.

Aircraft Engine Fires

Use the following procedures for extinguishing fires in high bypass turbofan engines:

1. Engine accessory section fire.

a. Halon 1211 or CO_2 may be introduced into the engine accessory section area through the access doors located on the aircraft engine cowling.

b. When the fire is under control, one fire fighter in full protective clothing (hot suit) will open the engine cowling. An AFFF hand line should be used to provide fire protection to the fire fighter.

NOTE: A screwdriver may be required to open the engine cowling due to the restrictions of proximity gloves.

2. Engine fire turbine section engine core. When the engine is shutdown, apply Halon 1211 or CO_2, and if required AFFF, into the aircraft exhaust section only until the fire is extinguished.

3. Engine fire in compressor section engine core.

CAUTION

The source of this fire will probably be burning titanium, and can be identified by the sparking effect of this material when it is burning. This fire is potentially destructive and may possibly burn through the engine casing if immediate fire suppression measures are not taken.

a. Halon 1211 or CO_2 may be introduced into the engine intake, exhaust, or accessory section.

b. When the fire is under control, one fire fighter in full protective clothing (hot suit) will open the engine cowling. An AFFF hand line should be used to provide fire protection to the fire fighter.

c. When the engine cowling is open, apply AFFF to both sides of the engine casing to complete extinguishing and provide additional cooling.

Electrical and Electronic Equipment Fires

In combating electrical fires, you must secure the source of electrical power. For combating class C fires, Halon 1211 or CO_2 is the primary agent, and should have no adverse effect on electrical or electronic components.

WARNING

Halon 1211 may be used in a small electronics compartment to make the atmosphere inert, provided fire fighters do not enter the compartment, or enter it with a self-contained breathing apparatus. Do NOT use CO_2 to make the atmosphere in an electronics compartment inert, as it may produce a spark.

TAILPIPE FIRES

When a fire occurs in the tailpipe of an aircraft during shutdown, the aircraft engine should be started by authorized personnel in order to attempt extinguishing through exhaust pressures. If this operation does not extinguish the fire, the following should be performed by the crash crew.

1. Direct fire-extinguishing agents Halon 1211 or CO_2 into the tailpipe.

2. If fire is not extinguished by the above methods, direct the stream of extinguisher agent into the intake duct.

WARNING

Do not stand directly in front of the intake duct.

HOT BRAKES

During a normal or an emergency landing, the landing gear is an item of considerable concern. With the added weight and landing speeds of modern aircraft, and because of the extreme braking required on shorter runways, overheated brakes and wheels are a common occurrence. You, as a fire fighter, must have a thorough understanding of the hazards created by overheated brakes, as well as the techniques and equipment used with this type of emergency.

Overheated aircraft wheels and tires present a potential explosion hazard because of built-up air pressure in the tires, which is greatly increased when fire is present. To avoid endangering the crews needlessly, all nonessential personnel should evacuate the area. The recommended procedure for cooling overheated wheel, brake, and tire assemblies is to park the aircraft in an isolated area and allow the assemblies to cool in the surrounding air. Using cooling agents, such as water, is not recommended unless absolutely necessary due to increased hazards to personnel near the overheated assembly. Most aircraft operating manuals for propeller-driven aircraft recommend that flight crews keep the propeller turning fast enough to provide an ample cooling airflow. Most major jet, propeller-driven, and turboprop aircraft now have fusible plugs incorporated in the wheel rims. These fusible plugs are designed to automatically deflate the tires. (Failure of fusible plugs to function properly has occurred.) Releasing the tire pressure reduces the pressure on the wheel, and thus eliminates the possibility of explosion.

CAUTION

The use of CO_2 for rapid cooling of a hot brake or wheel assembly is extremely dangerous. Explosive fracture may result because of the rapid change in temperature.

When responding to a wheel fire or hot brakes as a member of the emergency crew, you should approach the wheel with extreme caution in a fore or aft direction, never from the side in line with the axle. Peak temperatures may not be reached until 15 to 20 minutes after the aircraft has come to a complete stop. See figure 12-15.

WHEEL ASSEMBLY FIRES

The following types of fires and hazards may occur around an aircraft wheel assembly:

1. The heating of aircraft wheels and tires presents a potential explosion hazard, which is greatly increased when fire is present. The combination of increased stress on the brake wheel assembly, additional tire pressure, and the deterioration of components by heat may cause an explosion. This explosion is likely to propel pieces of the tire and/or metal through the air at high speeds.

2. Materials that may contribute to wheel assembly fires are grease, hydraulic fluid, bearing lubricants, and tire rubber.

a. Grease and bearing lubricant fires. When ignited, wheel grease fires can be identified by long flames around the wheel brake/axle assembly. These fires are usually small and should be extinguished quickly with Halon 1211 or water fog.

b. Rubber tires. Rubber from the tires may ignite at temperatures from 500°F (260°C) to 600°F (315°C) and can develop into an extremely hot and destructive fire. Halon 1211 or water fog should be used as early as possible to extinguish the fire. Reignition may occur if the rubber sustains its autoignition temperature or if the rubber is abraded and the fire is deep-seated.

c. A broken hydraulic line may result in the misting of petroleum-based fluids onto a damaged or

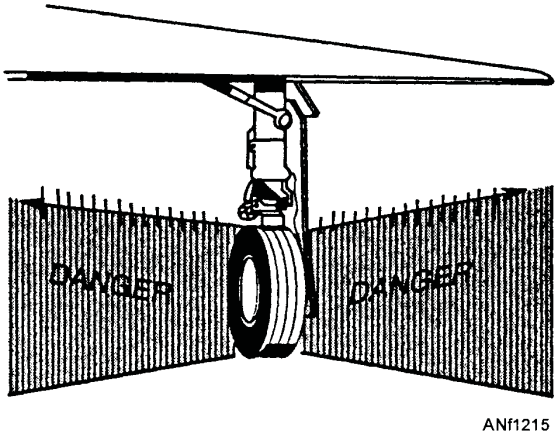

Figure 12-15.—Danger zones and attack zones in combating wheel fires. (Attack the fire from fore and aft—do not attack from the side).

hot wheel assembly. Upon ignition, misting fluid will accelerate a fire, resulting in rapid fire growth and excessive damage to the aircraft if it is not extinguished rapidly.

WARNING

A broken hydraulic line that causes misting of petroleum-based fluids around an overheated brake assembly can cause a potentially dangerous and destructive fire. Intermittent application of water fog should be used to extinguish this type of wheel assembly fire. Rapid cooling of a hot inflated aircraft tire/wheel assembly presents an explosion hazard. Therefore, fire-fighting personnel must exercise good judgment and care to prevent injuries. The vaporized products of hydraulic fluid decomposition will cause severe irritation to the eyes and respiratory tract.

The following safety information pertains to all aspects of wheel assembly fire-fighting operations:

- Rapid cooling may cause an explosive failure of a wheel assembly.
- When water fog is used on a wheel assembly fire, an intermittent application of short bursts (5 to 10 seconds) every 30 seconds should be used.
- The effectiveness of Halon 1211 may be severely reduced under extremely windy conditions if the Halon cannot be maintained on the fire source.
- You must take protective measures to prevent hydraulic fluid from coming into contact with the eyes. Seek medical attention immediately should the fluid come in contact with the eyes.
- Positive-pressure, self-contained breathing apparatus must be worn in fighting fires associated with hydraulic systems.
- Although Halon 1211 may extinguish hydraulic fluid fires, reignition may occur because this agent lacks an adequate cooling effect.
- In a fire, F-14, S-3, and C-5 aircraft with beryllium brakes may produce irritating or poisonous gases. These gases are toxic, and they are respiratory and eye irritants.
- Because heat is transferred from the brake to the wheel, agent application should be concentrated on the brake area. The primary objective is to prevent the fire from spreading upward into wheel wells, wing, and fuselage areas.

Q12-16. Where should you direct the fire-fighting agent for an internal engine fire?

Q12-17. What is the primary agent used to combat class C electrical fires?

Q12-18. What is the greatest hazard associated with overheated aircraft wheels and tires?

Q12-19. In what direction should you approach an aircraft with overheated brakes or a wheel fire?

Q12-20. What are the four materials that usually contribute to wheel assembly fires?

SUMMARY

In this chapter, you have learned about aircraft crash, rescue, and fire-fighting techniques and procedures. Fire chemistry, fire-fighting agents, and equipment used in dealing with naval aircraft were also covered.

(THIS PAGE IS INTENTIONALLY LEFT BLANK.)

ASSIGNMENT 12

Textbook Assignment: "Crash Rescue and Fire Fighting," chapter 12, pages 12-1 through 12-21.

12-1. What is the primary duty of a fire fighter?

1. To prevent fire from spreading
2. To save lives
3. To extinguish fire
4. To protect Navy equipment

12-2. There are four elements in the process of fire. The fourth element is a chemical reaction that allows the fire to sustain itself and grow. Which of the following terms describes this process?

1. Fire triangle
2. Fire cube
3. Fire tetrahedron
4. Fire matrix

12-3. What is the term used to describe the lowest temperature at which vapors of a substance can be ignited and continue to burn?

1. Fire point
2. Flash point
3. Ignition point
4. Spark point

12-4. What is the term used to describe the temperature at which a substance gives off enough vapors to form an ignitable mixture in the air near its surface?

1. Fire point
2. Flash point
3. Ignition point
4. Spark point

12-5. At what exposed temperatures will a portion of fuel (or its vapors) spontaneously ignite?

1. 200°F
2. 300°F
3. 400°F
4. 500°F

12-6. What class of fires occur in combustible materials, such as bedding, mattresses, books, cloth, and any matter that produces an ash?

1. Class A
2. Class B
3. Class C
4. Class D

12-7. What class of fires occur with flammable liquid substances, such as gasoline, jet fuels, paints, grease, and any petroleum-based products?

1. Class A
2. Class B
3. Class C
4. Class D

12-8. What class of fires is associated with electrically energized equipment?

1. Class A
2. Class B
3. Class C
4. Class D

12-9. What class of fires is associated with combustible metals, such as magnesium and titanium?

1. Class A
2. Class B
3. Class C
4. Class D

12-10. Water is most efficient when it absorbs enough heat to raise its temperature to a boiling point, and then changes to steam that carries away the heat, which cools the surface temperature.

1. True
2. False

12-11. When proportioned with water, AFFF provides which of the following fire-extinguishing advantages?

1. An aqueous film is formed on the surface of the fuel that prevents the escape of the fuel vapors
2. The layer effectively excludes oxygen from the fuel surface
3. The water content of the foam provides a cooling effect
4. Each of the above

12-12. What is the primary fire-fighting agent used to extinguish burning flammable or combustible liquid spill fires?

1. Water
2. AFFF
3. PKP
4. Halon

12-13. By what means does CO_2 extinguish a fire?

1. By cooling the fire below its ignition temperature
2. By eliminating all heat
3. By diluting and displacing its oxygen supply
4. By settling and blanketing the fire

12-14. By what means does Halon 1211 extinguish a fire?

1. By cooling the fire below its ignition temperature
2. By eliminating all heat
3. By settling and blanketing the fire
4. By inhibiting the chemical chain reaction and decomposing upon contact with flames

12-15. What two fire-fighting agents are used in the twin agent units on board flight and hangar deck mobile fire-fighting equipment?

1. AFFF/Halon 1211
2. CO_2/PKP
3. Water/AFFF
4. PKP/Halon 1211

12-16. What fire-fighting agent is used for combating flammable liquid fires?

1. Water fog
2. AFFF
3. PKP
4. CO_2

12-17. What is the diameter of fire hoses used on board naval ships?

1. 1/2 or 1 inch
2. 1 1/2 or 2 1/2 inch
3. 2 or 3 inch
4. 2 1/2 or 3 1/2 inch

12-18. How many gallons of concentrated AFFF are contained in a high-capacity AFFF station on board ship?

1. 200 gallons
2. 400 gallons
3. 600 gallons
4. 800 gallons

12-19. Where are the AFFF sprinkler systems installed in the hangar bay aboard ship?

1. In the overhead
2. On the hangar deck
3. On each bulkhead
4. In each CONFLAG station

12-20. Where are the flight deck AFFF fixed fire-fighting system controls located?

1. Primary flight control (Pri-Fly)
2. Navigation bridge
3. Both 1 and 2 above
4. Flight deck control

12-21. Vari-nozzles are used on all AFFF and saltwater hose lines. All nozzle gallon-per-minute flow rates are based on what psi pressure at the nozzle inlet?

1. 100 psi pressure
2. 200 psi pressure
3. 300 psi pressure
4. 400 psi pressure

12-22. What is (a) the length of Navy fire hoses and (b) the maximum operating pressure?

1. (a) 20 feet (b) 100 psi
2. (a) 35 feet (b) 225 psi
3. (a) 50 feet (b) 270 psi
4. (a) 75 feet (b) 340 psi

12-23. Fire hose pressure above 150 psi is hazardous because excessive nozzle reaction force may result in loss of nozzle control.

1. True
2. False

12-24. What is the purpose of the hard-rubber and hardwood plugs contained in the aircraft tool kit?

1. To seal ruptured fire hoses
2. To stop fuel tank leaks
3. To seal off aircraft intakes
4. To wedge open aircraft canopies

12-25. How does aluminized protective clothing provide protection to fire fighters?

1. Because of its thermal lining
2. Because of a positive airflow valve that cools the wearer
3. Due to its high percentage of reflectivity to radiant heat
4. Because of its lightweight fabric construction and ease of mobility

12-26. How much heat protection is lost when the gold-coated facepiece on the aluminized proximity suit becomes worn, scratched, or marred?

1. 25 %
2. 40 %
3. 65 %
4. 90 %

12-27. The Oshkosh T-3000 crash and fire-fighting truck has a water and AFFF capacity of what total number of gallons?

1. 1,000 gallons of water and 220 gallons of AFFF
2. 2,000 gallons of water and 310 gallons of AFFF
3. 3,000 gallons of water and 420 gallons of AFFF
4. 4,000 gallons of water and 510 gallons of AFFF

12-28. Where is the water and AFFF mixed on the P-4A aircraft fire-fighting vehicle before discharge?

1. Mixed in venturi inductors
2. It is premixed in the holding tank
3. Mixed by the variable-stream roof turret
4. Mixed by the AFFF concentrate centrifugal pumps

12-29. The P-4A aircraft fire-fighting vehicle comes equipped with what total number of 30-pound PKP dry-chemical fire extinguishers?

1. Two
2. Five
3. Four
4. Three

12-30. What fire extinguishing agents are carried on the P-19 fire-fighting truck?

1. PKP, water, and CO_2
2. Water, foam, and Halon 1211
3. Halon 1211, PKP, and water
4. CO_2, Halon 1211, and foam

12-31. Which of the following aircraft fire-fighting vehicles are used aboard ship?

1. P-4A
2. P-19
3. P-25
4. T-3000

12-32. How are the brakes engaged on the P-25 shipboard fire-fighting vehicle?

1. Depress the clutch pedal
2. Release the accelerator
3. Apply the hydraulic cylinder lever
4. Disengage the transmission

12-33. The twinned agent unit (TAU-2H) is primarily designed for extinguishing what class of fires?

1. Class A
2. Class B
3. Class C
4. Class D

12-34. The Halon nozzle on the twinned agent unit (TAU-2H) is equipped with what type of tip?

1. High-velocity tip
2. Aspirating tip
3. Duel orifice tip
4. Low-reaction discharge tip

12-35. For what reason is JP-4 jet fuel prohibited aboard Navy ships?

1. Because of its flash point
2. It cannot be mixed with other fuels
3. It contaminates the ships fuel systems
4. A fuel fire is difficult to extinguish

12-36. What is the calculated rate of flame spread for aviation gasoline (AVGAS) and JP-4 jet fuel?

1. 100 to 300 feet per minute
2. 200 to 400 feet per minute
3. 700 to 800 feet per minute
4. 500 to 900 feet per minute

12-37. What is the lowest flash point of aircraft fuels that is considered safe for use aboard naval vessels?

1. 80°F
2. 110°F
3. 120°F
4. 140°F

12-38. The top portion of the fuel tank is more void of liquid than any other section of the tank. In the event of an explosion, the liquid itself provides a restraining cushion, which will direct the explosive force in what direction?

1. Upward
2. Downward
3. Horizontally
4. Diagonally

12-39. What color is liquid oxygen in an aircraft oxygen system?

1. White
2. Light blue
3. Yellow
4. Light green

12-40. At what temperature does liquid oxygen turn or boil into gaseous oxygen?

1. 212°F
2. -32°F
3. -297°F
4. 121°F

12-41. What is the usual mixture of aircraft anti-icing fluids?

1. 90% alcohol and 10% glycerin
2. 75% alcohol and 25% glycerin
3. 45% alcohol and 55% glycerin
4. 85% alcohol and 15% glycerin

12-42. What fire-extinguishing agent should be applied to extinguish an ignited Mk 45 or LLU-2 parachute flare?

1. Halon 1211
2. AFFF
3. Low-velocity fog
4. PKP

12-43. What fire extinguishing agent should NOT be directed into a battery compartment to effect cooling or to displace explosive gases because of the risk of explosion?

1. CO_2
2. AFFF
3. Water fog
4. PKP

12-44. What fire-extinguishing agent is used to lower the temperature of an aircraft battery that is in a thermal runaway condition when no flame or fire is present?

1. CO_2
2. AFFF
3. Water fog
4. PKP

12-45. Because of the potential hazards to personnel, what additional protection is necessary for personnel to combat composite fibers resulting from an aircraft fire?

1. More fire party personnel
2. Respiratory protection
3. Additional proximity suit liner
4. Special eyewear

12-46. What advantage(s) does composite materials reinforced with carbon/graphite fibers provide in advanced aircraft construction?

1. Superior stiffness
2. High strength-to-weight ratio
3. Ease of fabrication
4. All of the above

12-47. In composite aircraft construction, boron fibers pose less of a problem to unprotected electrical equipment than carbon or graphite fibers.

1. True
2. False

12-48. What area of an aircraft is the most common source of aircraft crash fires?

1. Engine compartment
2. Landing gear
3. Wing fuel tanks
4. Ordnance/stores

12-49. How are aircraft fluid lines identified?

1. By the diameter and length of the line
2. By the material it is made of
3. By etched markings in the center
4. By bands of paint or strips of tape around the line

12-50. On aircraft fluid lines, steel tags can be used in place of identification tape or decals on lines of what diameter?

1. 1 inch
2. 2 inches
3. 3 inches
4. 4 inches or larger

12-51. What do identification tape codes indicate on aircraft fluid lines?

1. Function and contents
2. Hazards and direction of flow
3. Pressure in the fluid line
4. All of the above

12-52. How many general classes of hazards are found in connection with fluid lines?

1. One
2. Two
3. Three
4. Four

12-53. What does the hazard code PHDAN indicate on aircraft lines?

1. Potential electrical danger
2. Physically dangerous material
3. Anesthetics and harmful materials
4. Toxic and poisonous materials

IN ANSWERING QUESTIONS 12-54 AND 12-55, REFER TO TABLE 12-1 IN THE TEXT.

12-54. What is the associated hazard code that identifies alcohol?

1. FLAM
2. AAHM
3. PHDAN
4. TOXIC

12-55. What is the associated hazard code that identifies trichloroethylene?

1. FLAM
2. AAHM
3. PHDAN
4. TOXIC

12-56. The success of aircraft fire-fighting, crash, and rescue techniques will continue to depend on which of the following factors?

1. Training
2. Leadership
3. Teamwork
4. Each of the above

12-57. What person must be informed when AFFF is used as the fire suppression agent on an aircraft fire and the agent is directed at or ingested into the engine or accessory section?

1. The commanding officer
2. The senior fire official on board ship
3. The maintenance officer of the unit involved
4. The squadron quality assurance officer

12-58. In addition to the use of fire-extinguishing agents, what other method may be used to control internal aircraft engine fires?

1. Installing the engine intake covers
2. Windmilling the engine
3. Turn the aircraft into the wind
4. Let the fire burn itself out

12-59. When CO_2 or Halon 1211 is expelled directly into an engine that is hot or has an internal fire, which of the following conditions could occur?

1. Thermal shock
2. An explosion
3. Produce toxic fumes
4. Thermal runaway

12-60. In what area would you introduce fire-extinguishing agents to put out a fire in the engine accessory section area?

1. Access doors on the engine cowling
2. The engine intake
3. The engine exhaust section
4. The compressor section

12-61. How can burning titanium be identified?

1. By the color of the smoke
2. By the smell produced
3. By the sparking effect of the material
4. By the large amount of ashes produced

12-62. When combating class C electrical fires, what is the first thing you should do?

1. Charge all fire hoses to maximum pressure
2. Secure the source of electrical power
3. Post a fire security watch
4. Ensure a nonconductive rubber mat is placed on the deck for personnel protection

12-63. CO_2 should NOT be used to make the atmosphere in an electronics compartment inert for which of the following reasons?

1. The possibility of suffocation
2. It may cause damage to the electrical components
3. It may produce a spark

12-64. When a fire occurs in the tailpipe of an aircraft during shutdown, the aircraft engine should be started in order to attempt extinguishing through exhaust pressures.

1. True
2. False

12-65. What is the recommended procedure for cooling overheated wheel, brake, and tire assemblies?

1. Direct a steady stream of water at the assemblies
2. Apply water fog to cool the brakes
3. Discharge short burst of CO_2 at the assemblies
4. Allow assemblies to cool in the surrounding air

12-66. What is the purpose of fusible plugs incorporated in aircraft wheel rim assemblies?

1. Automatically deflates the tire
2. Reduces the pressure on the wheel
3. Eliminates the possibility of explosion
4. All of the above

12-67. When responding to a wheel fire or hot brakes, in what direction should personnel approach the wheel assembly?

1. In a fore or aft direction of the wheel
2. Side to side in line with the axle
3. Diagonally with the landing gear
4. Any direction is approved to fight the fire

12-68. Which of the following materials may contribute to wheel assembly fires?

1. Grease
2. Tire rubber
3. Hydraulic fluid
4. Each of the above

12-69. At what temperatures may aircraft tires ignite?

1. 200°F to 400°F
2. 500°F to 600°F
3. 700°F to 800°F
4. 900°F to 1000°F

12-70. What is the danger in combating wheel assembly fires on aircraft with beryllium brakes installed?

1. They may produce irritating or poisonous gases
2. They burn out of control
3. The brake temperature cannot be measured
4. The heat is not transferred to the wheel

APPENDIX I

GLOSSARY

ABOARD—In or on a ship, aircraft, or other means of transportation.

ABORT—To cut short or break off an action, operation, or procedure with an aircraft, guided missile, or the like, especially because of equipment failure; for example, to abort a mission.

ACCELERATION—A change in the velocity of a body, or the rate of such change with respect to speed or direction.

ACCESSORY—A part, subassembly, or assembly designed for use in conjunction with or to supplement another assembly or unit. For example, the fuel control is an accessory for a turbojet engine.

AERODYNAMICS—The science that deals with the motion of air and other gaseous fluids and the forces acting on bodies in motion relative to such fluids.

AFFF—An aqueous film-forming foam; also known as light water.

AFT—Towards the rear of the ship, aircraft, or other object.

AILERON—A movable control surface or device. One of pair located in or attached to the wings on both sides of an aircraft. The primary purpose is to control the aircraft laterally or in a roll by creating unequal or opposing lifting forces on opposite sides of the aircraft.

AIMD—Avaition Intermediate Maintenance Department.

AIRFOIL—A structure or body, such as an aircraft wing or propeller blade, designed to provide lift/thrust when in motion relative to the surrounding air.

AIRSPEED—The speed of an aircraft, missile, rocket, or the like, relative to the air through which it flies.

ALTIMETER—An instrument for measuring altitude. It uses the change in atmospheric pressure with altitude to indicate the approximate elevation above a given point.

AMBIENT—Surrounding; adjacent to; next to. For example, ambient conditions are physical conditions of the immediate area such as ambient temperature, ambient humidity, ambient pressure, etc.

ANGLE OF ATTACK—The angle at which a body, such as an airfoil or fuselage, meets a flow or air.

ANTI-ICING—The prevention of ice formation upon an aircraft's surface or engines.

APRON—An area, ordinarily paved, for parking or handling aircraft.

ASCEND—To move or rise upward.

ASW—Antisubmarine warfare.

ATMOSPHERE—The body of air surrounding the earth. The atmospheric pressure at sea level is 14.7 psi.

ATTITUDE—The position or orientation of an aircraft, either in motion or at rest, as determined by the relationship between its axes and some reference line or plane or some fixed system of reference axes.

AUTOMATIC PILOT—A device or system that automatically controls the flight of an aircraft or guided missile.

AVGAS—Aviation gasoline for reciprocating engines.

AVIONICS—Electronics as applied to aviation.

AXIS—An imaginary line that passes through a body, about which the body rotates or may be assumed to rotate. For example, the horizontal axis, the lateral axis, and the longitudinal axis about which an aircraft rotates.

BERNOULLI'S PRINCIPLE—If a fluid flowing through a tube reaches a constriction, or narrowing of the tube, the velocity of fluid flowing through the construction increases and the pressure decreases.

CANTED DECK—The area of an aircraft carrier flight deck that is at an angle to the center line of the ship. The canted deck permits aircraft to be parked out of the way of landing aircraft.

CANOPY—A covering; for example, a cockpit canopy is a transparent covering for a cockpit.

CELSIUS—The temperature scale using the freezing point as zero and the boiling point as 100, with 100 equal divisions between, called degrees. A reading is usually written in the abbreviated form, for example, 75 C. This scale was formerly known as the Centigrade scale, but was renamed Celsius in recognition of Andrew Celsius, the Swedish astronomer who devised the scale.

COCKPIT—A compartment in the top of an aircraft fuselage for the pilot and other crew members.

COWLING—A removable cover or housing placed over or around an aircraft component or section, especially an engine.

DE-ICING—The breaking off or melting of ice from aircraft surfaces, or fuel induction systems.

DENSITY—The weight per unit volume of a substance.

DESCENT—Relative to an aircraft, to come down, under control, from a higher to a lower altitude.

DYE MARKER—A substance that, when placed in water, spreads out and colors the water immediately to make a spot readily visible from the air.

ELEVATOR—As applied to aircraft, a control surface, usually hinged to a horizontal stabilizer, that is used to control the aircraft about its lateral axis. As applied to aircraft carriers, elevators are used to move aircraft between the flight deck and hanger deck.

EMPENNAGE—The tail section of an aircraft, including the stabilizing and control surfaces.

ENERGY—The ability or capacity to do work.

ETA—Estimated time of arrival.

FACE CURTAIN—*A* sheet of heavy fabric, installed above an ejection seat, that is pulled down to trigger the ejection seat and to protect the pilot or crew member's face against wind blast.

FAIRING—A part or structure that has a smooth, streamlined outline, used to cover a nonstreamlined object.

FLAP—The tendency of a blade to rise with high-lift demands as it tries to screw itself upward into the air.

FLASH POINT—The temperature at which a substance, such as oil or fuel, will give off a vapor that will flash or burn momentarily when ignited.

FLIGHT CONTROL MECHANISM—The linkage that connects the control(s) in the cockpit with the flight control surface(s).

FORCE—The action of one body on another tending to change the state of motion of a body acted upon. Force is usually expressed in pounds.

FUSELAGE—The main or central structure of an aircraft that carries the crew, passengers, or other load.

HORSEPOWER—A unit of power equal to the power necessary to raise 33,000 pounds one foot in 1 minute.

HUMIDITY—Moisture or water vapor in the air.

HYDRAULICS—The branch of mechanics that deals with the action or use of liquids forced through tubes and orifices under pressure to operate various mechanics.

INERTIA—The tendency of a body at rest to remain at rest, and a body in motion to continue to move at a constant speed along a straight line, unless the body is acted upon in either case by an unbalanced force.

JETTISON—To throw or dump overboard. For example, to drop or eject fuel, tanks, or gear from an aircraft to lighten the load for emergency action.

LAG—The tendency of rotor blades to remain at rest during acceleration.

LANDING GEAR—The components of an aircraft that support and provide mobility foe the aircraft on land, water, or other surfaces.

LAUNCH—To release or send forth. For example, to launch aircraft from an aircraft carrier.

LEAD—The tendency of rotor blades to remain in motion during deceleration.

LEADING EDGE—The forward edge of an airfoil that normally meets the air first.

LONGERON—A main structural member along the length of an airplane body, to fuselage.

LONGITUDINAL—The lengthwise dimension; for example, the longitudinal axis of an aircraft runs lengthwise from the nose to the tail.

MIM—Maintenance Instruction Manual.

MONOCOQUE—An aircraft structure in which the stressed outer skin carries all or a major portion of the torsional and bending stress.

NACELLE—A streamlined structure, housing, or compartment on an aircraft; for example a housing for a engine.

NAMP—The Naval Aviation Maintenance Program.

NBC—Nuclear Biological Chemical.

PITCH—The rotational movement of an aircraft about its lateral axis.

PRESSURE—The amount of force distributed over each unit of area. Pressure is expressed in pounds per square inch (psi).

PYLON—A structure or strut that supports an engine pod, external tank, etc., on an aircraft.

RADAR—A device that uses reflected radio waves for the detection of objects.

RADOME—A dome housing for a radar antenna on an aircraft.

RAM AIR—Air forced into an air intake or duct by the motion of the intake or duct through the air.

RPM—Revolutions per minute.

RUDDER—An upright control surface that is deflected to control yawing movement about the vertical axis of an aircraft.

SELECTOR VALVE—A valve used to control the flow of fluid to a particular mechanism, as in a hydraulic system.

SE—Support equipment. All of the equipment on the ground needed to support aircraft in a state of readiness for flight.

SERVICING—The refilling of an aircraft with consumables such as fuel, oil, and compressed gases to predetermined levels, pressures, quantities, or weights.

SLIPSTREAM—The stream of air driven backward by a rotating propeller.

SPECIFIC GRAVITY—The ratio of the weight of a given volume of a substance to the weight of an equal volume of some standard substance, such as water.

STRUT—A type of supporting brace; a rigid member or assembly that bears compression loads, tension loads, or both, such as a landing gear to transmit the load from the fuselage of the aircraft.

TAB—A small auxiliary airfoil set into the trailing edge of an aircraft control surface and used to trim or to move, or assist in moving, the larger surface.

TENSION—A force or pressure that exerts a pull or resistance.

THRUST—The forward-direction pushing or pulling force developed by an aircraft engine or rocket engine.

TORQUE—A turning or twisting force.

TRAILING EDGE—The aft edge of an airfoil. The edge over which the airflow normally passes last.

VELOCITY—The rate of motion in a particular direction.

VISCOSITY—The internal resistance of a liquid that tends to prevent it from flowing.

WAVE OFF—An act or instance of refusing an aircraft permission to land in an approach, requiring another attempt. Also, the signal given an aircraft in such refusal.

YAW—The rotational movement of an aircraft about its vertical axis.

APPENDIX II

REFERENCES USED TO DEVELOP THE NONRESIDENT TRAINING COURSE

Although the following references were current when this course was published, their continued currency cannot be assured. When consulting these references, keep in mind that they may have been revised to reflect new technology or revised methods, practices, or procedures. Therefore, you need to ensure that you are studying the latest references.

Chapter 1

Basic Military Requirements, NAVEDTRA 12018, Naval Education and Training Professional Development and Technology Center, Pensacola, Florida, September 1999.

United States Naval Aviation 1910-1995, Naval Historical Center, Department of the Navy, Washington, D.C., 1997.

Manual of Navy Enlisted Manpower and Personnel Classification and Occupational Standards, NAVPERS 18068-F, Department of the Navy, Bureau of Naval Personnel, Washington, D.C., October 1998.

Chapter 2

Basic Military Requirements, NAVEDTRA 12018, Naval Education and Training Professional Development and Technology Center, Pensacola, Florida, September 1999.

Naval Aviation Maintenance Program (NAMP), OPNAVINST 4790.2 series, Naval Air Systems Command, Patuxent River, MD, February 1998.

Aviation Maintenance Ratings, NAVEDTRA 12017, Naval Education and Training Professional Development and Technology Center, Pensacola, Florida, August 1997.

Chapter 3

United States Naval Aviation 1910-1995, Naval Historical Center, Department of the Navy, Washington, D.C., 1997.

Fundamentals of Aviation and Space Technology, Institute of Aviation, University of Illinois, Savoy, IL, 1974.

Chapter 4

Aviation Structural Mechanic (H & S) 3 & 2, NAVEDTRA 12338, Naval Education and Training Program Management Support Activity, Pensacola, Florida, July 1993. *

General Manual for Structural Repair, NAVAIR 01-1A-1, Naval Air Technical Services Facility, Philadelphia, PA, September 1991.

Chapter 5

Aviation Structural Mechanic (H & S) 3 & 2, NAVEDTRA 12338, Naval Education and Training Program Management Support Activity, Pensacola, Florida, July 1993. *

Chapter 6

Aviation Machinist's Mate 3 & 2, NAVEDTRA 12300, Naval Education and Training Program Management Support Activity, Pensacola, Florida, September 1991. *

Chapter 7

Aviation Electronics Technician 1 (Organizational), NAVEDTRA 12331, Naval Education and Training Program Management Support Activity, Pensacola, Florida, June 1993. *

Chapter 8

Aviation Ordnanceman 3, 2, & 1, NAVEDTRA 12309, Naval Education and Training Program Management Support Activity, Pensacola, Florida, April 1996. *

Chapter 9

Aviation Support Equipment Technician 3 & 2, Volumes 1 & 2, NAVEDTRA 12385, Naval Education and Training Professional Development and Technology Center, Pensacola, Florida, September 1998.

Naval Aviation Maintenance Program (NAMP), OPNAVINST 4790.2 series, Naval Air Systems Command, Patuxent River, MD, February 1998.

Chapter 10

Aviation Boatswain's Mate H 3 & 2, NAVEDTRA 12368, Naval Education and Training Program Management Support Activity, Pensacola, Florida, April 1994. *

Aviation Maintenance Ratings, NAVEDTRA 12017, Naval Education and Training Professional Development and Technology Center, Pensacola, Florida, August 1997.

U.S. Navy Support Equipment Common, Basic Handling and Safety Manual, NAVAIR 00-80T-96, April 1996.

Aircraft Signals, NATOPS Manual, NAVAIR 00-80T-113, Naval Air Systems Command, October 1997.

CV NATOPS Manual, NAVAIR 00-80T-105, Naval Air Systems Command, November 1995.

LHD/LHA/LPD NATOPS Manual, NAVAIR 00-80T-106, Naval Air Systems Command, August 1994.

Chapter 11

Aircrew Survival Equipmentman 3 & 2, NAVEDTRA 10380, Naval Education and Training Program Management Support Activity, Pensacola, Florida, March 1990. *

Naval Search and Rescue (SAR) Manual, Naval Warfare Publication (NWP 3-50.1), February 1996.

Aviation-Crew Systems, RESCUE and SURVIVAL EQUIPMENT, Technical Manual NAVAIR 13-1-6.5, January 1998.

Chapter 12

Aviation Boatswain's Mate H 3 & 2, NAVEDTRA 12368, Naval Education and Training Program Management Support Activity, Pensacola, Florida, April 1994. *

Aircraft Fire-fighting and Rescue Manual, NATOPS, U.S. Navy, NAVAIR 00-80R-14, Naval Sea Systems Command, 1994.

Surface Ship Fire-fighting, NSTM S9086-S3-STM-010/CH-555, Volume 1, Naval Sea Systems Command, 1996.

---

* Effective 01 October 1996, the Naval Education and Training Program Management Support Activity (NETPMSA) became the Naval Education and Training Professional Development and Technology Center (NETPDTC).

APPENDIX III

ANSWERS TO EMBEDDED QUESTIONS CHAPTERS 1 THROUGH 12

CHAPTER 1

A1-1. The mission and function of naval aviation is to support our naval forces and to closely coordinate with other naval forces in maintaining command of the seas.

A1-2. The Navy purchased its first aircraft from Glenn Curtiss on 8 May 1911.

A1-3. Naval Aviator CDR Alan B. Shepard Jr.

A1-4. The band was lifted in 1993.

A1-5. The initial Machinist Mate (Aviation) rating came from the Machinist Mate rating.

A1-6. Major changes to the enlisted aviation structure took place in 1948.

A1-7. The Manual of Navy Enlisted Manpower and Personnel Classification and Occupational Standards.

A1-8. The Aviation Support Equipment Technician rating.

A1-9. Aviation service ratings are subdivisions of a general rating that require specialized training within that general rating.

A1-10. Your division training petty officer or the Education Services Office.

CHAPTER 2

A2-1. It provides direction in the assignment of duties.

A2-2. To provide service and support to the fleet.

A2-3. The commanding officer.

A2-4. The air operations department.

A2-5. Issuing all fuels and oils, issuing aircraft parts and support equipment, and operating the general mess.

A2-6. Organizational, intermediate, and depot.

A2-7. The basic concept of quality assurance (QA) is preventing defects.

A2-8. Production control and material control.

A2-9. The power plants division.

A2-10. A naval air facility (NAF) is smaller and is not equipped to handle large numbers of aircraft?

A2-11. Carrier, patrol, composite, and noncombatant.

A2-12. Fighter, attack, strike/fighter, antisubmarine, and airborne early warning squadrons.

A2-13. Development, tactical, and training squadrons.

A2-14. Any type of aircraft that requires testing and evaluation.

A2-15. To provide long distance transfer of personnel and supplies.

A2-16. The commanding officer.

A2-17. The maintenance material control officer (MMCO).

A2-18. Administrative department, safety department, operations department, and maintenance department.

A2-19. Target, aircraft, avionics/armament, and line divisions.

A2-20. The commanding officer must be a naval aviator.

A2-21. Four divisions during peace time.

A2-22. The V-1 flight deck division.

A2-23. The V-4 aviation fuels division.

A2-24. The navigation department.

A2-25. The aircraft Intermediate Maintenance Department (AIMD).

A2-26. An admiral.

A2-27. The Chief of Naval Operations (CNO).

A2-28. A "yard" period is the time scheduled for periodic repair and refitting of an aircraft carrier.

A2-29. Underway replenishment by supply ships, carrier onboard delivery aircraft, or by vertical replenishment helicopter squadrons.

A2-30. 1962.

A2-31. Fighter.

A2-32. The aircraft has been modified four times.

A2-33. Bell-Boeing.

CHAPTER 3

A3-1. Newton's first law of motion, which describes an object's willingness to stay at rest because of inertia.

A3-2. Newton's second law of motion, which describes the reason why, when equal force is applied, a heavy object accelerates slower than a light object.

A3-3. If you inflate a balloon and then release it (without tying the neck), it will move opposite the direction of the escaping air (Newton's third law of motion).

A3-4. Bernoulli's principle states that "as fluid reaches a narrow or constricting part of a tube, its speed increases and its pressure decreases."

A3-5. The flow of air is split.

A3-6. Lift is developed by the difference in air pressure on the upper and lower surfaces of an airfoil. As long as there is less pressure on the upper surface than on the lower surface, an aircraft will have lift.

A3-7. The four forces that affect flight are lift, weight, thrust, and drag.

A3-8. Roll, pitch, and yaw.

A3-9. (a) An airplane's angle of attack is changed by raising the nose.

(b) A helicopter's angle of attack is changed by increasing the pitch of the rotor blades.

A3-10. The main difference between a helicopter and an airplane is the way lift is achieved.

A3-11. A helicopter can hover.

CHAPTER 4

A4-1. Tension.

A4-2. Compression.

A4-3. Shear is a stress exerted when two pieces of fastened material tend to separate.

A4-4. Bending is a combination of tension and compression.

A4-5. Torsion is the result of a twisting force.

A4-6. Metallic or nonmetallic materials.

A4-7. Aluminum, magnesium, titanium, steel, and their alloys.

A4-8. Transparent plastics, reinforced plastics, and composite materials.

A4-9. Monocoque, semimonocoque, and reinforced shell.

A4-10. Points on the fuselage are located by station numbers, at measured distances.

A4-11. The spars are the main structural members of the wing.

A4-12. "Wet wing" describes the wing that is constructed so it can be used as a fuel cell.

A4-13. Vertical stabilizer and horizontal stabilizer.

A4-14. Primary, secondary, and auxiliary.

A4-15. The purpose of speed brakes is to keep the airspeed from building too high when the aircraft dives and to slow the aircraft's speed before it lands.

A4-16. The tricycle type of landing gear.

A4-17. The main advantage of rotary-wing aircraft is that lift and control are independent of forward speed; rotary-wing aircraft can fly forward, backward, sideways, or hover above the ground.

A4-18. Conventional fixed (skid type), retractable, and nonretractable.

A4-19. The tail rotor group.

A4-20. The possibility of leakage and contamination by foreign matter.

A4-21. The selector valve directs the flow of fluid.

A4-22. The actuating unit converts the fluid pressure into useful work.

A4-23. Hydraulic contamination is defined as foreign material in the hydraulic system of an aircraft.

A4-24. The two types of pneumatic systems are the storage bottle type and the type that has its own air compressor.

CHAPTER 5

A5-1. By its specification number or trade name.

A5-2. The head, grip, and threads.

A5-3. Machine screw, structural screw, and self-tapping screw.

A5-4. Nonself-locking nuts.

A5-5. A washer guards against mechanical damage to the material being bolted and prevents corrosion of the structural members.

A5-6. Camloc, Airloc, and Dzus.

A5-7. Solid rivets and blind rivets.

A5-8. Countersunk head or flush rivets.

A5-9. Snap rings, turnbuckles, taper pins, flat head pins, and flexible connectors/clamps.

A5-10. Maintenance Instruction Manual (MIM).

A5-11. Safetying prevents aircraft hardware and fasteners from working loose due to vibration.

A5-12. The single-wire, double-twist method.

A5-13. Clip-locking method and wire-wrapping method.

A5-14. Stainless steel cotter pins.

A5-15. Plain, lock washers, and special washers.

CHAPTER 6

A6-1. The four types of jet propulsion engines are the rocket, ramjet, pulsejet, and gas turbine engines.

A6-2. Burning fuel in a container that has an opening at one end causes the expanding gases to rush out of the nozzle at a high velocity, which leaves an unbalanced pressure at the other end. This pressure moves the container in the direction opposite to that of the escaping gases.

A6-3. Newton's Third law, which states that "for every acting force there is an equal and opposite reacting force."

A6-4. The ramjet is the simplest power plant that uses atmospheric air to support combustion.

A6-5. The pulsejet doesn't have a compressor or a turbine. It can't take off under its own power.

A6-6. The four types of turbine engines are the turbojet, turboprop, turboshaft, and turbofan engines.

A6-7. Inlet duct, compressor, combustion chamber, turbine, and exhaust cone assembly.

A6-8. The power section, the torquemeter assembly, and the reduction gear assembly.

A6-9. Normally, helicopters have turboshaft engines.

A6-10. The major difference between a turboshaft and turbofan engine is the airflow.

A6-11. The heart of the gas turbine engine fuel system is the fuel control.

A6-12. Some of the engine operating variables that are sensed by modern fuel controls include the following: pilots' demands, compressor inlet temperature, compressor discharge pressure, burner pressure, compressor inlet pressure, rpm, and turbine temperature.

A6-13. The main bearings and accessory drive gears.

A6-14. A scavenging system returns oil to the tank for reuse.

A6-15. The high-voltage system produces a double spark, which ionizes the gap between the igniter plug electrodes so the high-energy, low-voltage component may follow.

In the low-voltage system, the spark is like the high-voltage system, but it has a self-ionizing igniter plug.

A6-16. The accessory section of the gas turbine engine is usually mounted beneath the compressor section.

A6-17. The Brayton cycle is a process that begins with certain conditions and ends with those same conditions.

A6-18. ANA Bulletin No. 306M designation system and MIL-STD-1812 designation system.

A6-19. A special designation, such as experimental or restricted service.

A6-20. The type indicator, the manufacturer's indicator, and the model indicator.

A6-21. MIL-STD-1812 system.

A6-22. Before any maintenance turnups are conducted, personnel MUST install protective screens for all ducts.

A6-23. The two most serious hazards that you face when working around engine exhausts are high temperatures and high velocity of gases exiting tailpipes.

A6-24. When you work around jet engines, you should always wear protectors to avoid hearing loss.

CHAPTER 7

A7-1. The generator and the battery.

A7-2. The generator.

A7-3. Acid burns and explosions.

A7-4. Internal shorting or thermal runaway.

A7-5. Flush the area with large quantities of fresh water and seek medical attention immediately.

A7-6. Flush the affected area with large quantities of fresh water. Neutralize with vinegar or a 5-percent solution of acetic acid, and seek medical attention immediately.

A7-7. Ac generators or alternators.

A7-8. An ac electrical system.

A7-9. These power units furnish electrical power when engine-driven generators are not operating or when external power is not available.

A7-10. The altimeter, the airspeed and Mach number indicator, and the rate-of-climb indicator.

A7-11. It displays the correct altitude of the aircraft.

A7-12. Its speed compared to the speed of sound in the surrounding medium (local speed).

A7-13. The relative position of the aircraft compared to the earth's horizon.

A7-14. It shows the correct execution of a turn and bank as well as the lateral attitude of the aircraft in straight flight.

A7-15. The magnetic (standby) compass, the gyro compass, and the horizontal situation indicator.

A7-16. The transmission of intelligible coded radio-frequency waves as Morse Code.

A7-17. The transmission of sound intelligence (voice, music, or tones) by continuous radio-frequency waves.

A7-18. From 3,000 to 30,000 kilohertz.

A7-19. 100 to 400 megahertz.

A7-20. The Tactical Air Navigation System (TACAN).

A7-21. GPS provides highly accurate three-dimensional position, velocity, and time data to suitably equipped aircraft anywhere on or near the earth.

A7-22. 24 satellites.

A7-23. A continuous carrier wave (CW) transmission.

A7-24. RAdio Detection And Ranging.

A7-25. Echo waves.

A7-26. 1100 feet per second.

A7-27. IFF (Identification Friend or Foe)

A7-28. Gather intelligence from enemy electronic devices and make them ineffective.

A7-29. To detect underwater sounds and transmit these sounds to aircraft.

A7-30. Magnetic Anomaly Detection (MAD).

CHAPTER 8

A8-1. Ejection seats, canopy ejection systems, aircraft bomb racks, and launchers.

A8-2. A chemical used to ignite combustible substances.

A8-3. Items that are NOT normally separated from the aircraft in flight.

A8-4. An explosive is a material that is capable of producing an explosion by its own energy.

A8-5. High explosives and low explosives.

A8-6. The bursting effect prevents its use in ammunition and gun systems because the gas pressure formed could burst the barrel of a weapon.

A8-7. Low explosives are solid combustible materials that decompose rapidly but do not normally explode.

A8-8. Ordnance identification provides working and safety information, such as service/nonservice ammunition, class of explosives, and color codes representing the explosive hazards.

A8-9. Color codes identify the explosive hazards within the ordnance.

A8-10. Bomb body, suspending lugs, fuzing, and fin assemblies.

A8-11. Full scale and sub-caliber practice bombs.

A8-12. Antitank bomb cluster and antipersonnel/anti-material bomb cluster.

A8-13. The Mighty Mouse and the Zuni rockets.

A8-14. At least 100 miles.

A8-15. The Mach number is "the ratio of the speed of an object to the speed of sound in the medium through which the object is moving."

A8-16. Subsonic, transonic, supersonic, and hypersonic.

A8-17. Yellow, brown, and blue.

A8-18. The Walleye guided weapon does not have a propulsion system.

A8-19. Torpedoes and air-laid mines.

A8-20. The M61A1, 20-mm automatic gun system.

A8-21. Pyrotechnics are burning items that produce a bright light for illumination.

A8-22. The Mk 124 Mod 0 Marine smoke and illumination signal and the Mk 79 Mod O illumination signal kit.

A8-23. For marking day or night reference points to plot the course or enemy submarines.

A8-24. For long-burning, smoke and flame reference-point marking on the ocean surface.

A8-25. Aircraft canopy removal, seat ejection, seat ejection drogue chute, and parachute openings.

A8-26. The AME rating.

A8-27. Miscellaneous cartridges.

A8-28. They suspend, arm, and release ordnance for accurate delivery of weapons against the enemy.

A8-29. Bomb racks carry, arm, and release stores.

A8-30. Helicopters.

A8-31. They are used during tactical situations to give an aircraft added offensive and defensive capabilities.

A8-32. The LAU-7/A guided missile launcher.

CHAPTER 9

A9-1. Aircraft handling equipment and servicing equipment.

A9-2. Aircraft servicing equipment, maintenance platforms, and armament handling equipment.

A9-3. The A/S32A-31A tow tractor.

A9-4. The A/S32A-32 aircraft towing tractor.

A9-5. The A/S32A-36A crane.

A9-6. The A/S32P-25 vehicle.

A9-7. Aqueous Film-Forming Foam (AFFF) and Halon 1211.

A9-8. Public works department.

A9-9. The NC-2A MEPP.

A9-10. An electric motor.

A9-11. High voltage.

A9-12. Air and electrical power.

A9-13. High-volume air pressure, extreme exhaust temperatures, jet intake suction, and high noise levels.

A9-14. Hydraulic systems.

A9-15. Six cylinders.

A9-16. Storage tank, transfer tank, control valves, and transfer lines.

A9-17. For cooling the interior of aircraft and electronic components for maintenance, testing, or calibration for long periods of time.

A9-18. Aircraft tripod jacks.

A9-19. 600 pounds.

A9-20. It is used to inspect support equipment prior to its use.

A9-21. Two.

A9-22. The line division.

A9-23. 3 years.

A9-24. The commanding officer or his/her designated (in writing) representative.

A9-25. Anyone witnessing the misuse or abuse of support equipment.

A9-26. Naval Aviation Maintenance Program (NAMP), OPNAVINST 4790.2 (series).

CHAPTER 10

A10-1. 5 mph.

A10-2. Yellow and/or white.

A10-3. V-1 division.

A10-4. To find things, such as nuts, bolts, safety wire, and general trash, that could be sucked into an aircraft's engine or blown about by exhaust that could cause serious damage to the aircraft or cause personnel injury.

A10-5. The "foul line" or "safe parking line."

A10-6. To provide a means for arresting (stopping) aircraft in an emergency.

A10-7. The "emergency stop" signal.

A10-8. 50 to 100 feet.

A10-9. Adjustable chock assemblies.

A10-10. The maintenance instruction manual (MIM) for the specific aircraft.

A10-11. The Air Department.

A10-12. It is used to tow a variety of aircraft.

A10-13. All hands.

A10-14. No, the aircraft should not be manned.

A10-15. The line.

A10-16. Color coding distinguishes flight-line fire extinguishers from building fire equipment.

A10-17. It allows for shrinkage when the line becomes wet.

A10-18. To prevent rotor blade damage during gusty or turbulent wind conditions.

A10-19. Wave-off and hold.

A10-20. The LSE (Landing Signalman Enlisted).

A10-21. Amber.

A10-22. No, this should be avoided.

CHAPTER 11

A11-1. Protects personnel from a variety of hazards.

A11-2. The HGU–84/P series helmet.

A11-3. It compresses the body to prevent blood from pooling in the lower parts.

A11-4. The Navy Back (NB), Navy Chest (NC), and Navy Ejection System (NES).

A11-5. The parachute harness.

A11-6. The torso harness suit.

A11-7. It helps deploy the main parachute.

A11-8. Two, automatic and manual inflation.

A11-9. 29 pounds.

A11-10. Identifies occupational fields.

A11-11. Inside the Rigid Seat Survival Kit (RSSK).

A11-12. Four.

A11-13. 20-man life raft.

A11-14. Two, medical and general.

A11-15. Seven.

A11-16. The Mk 13 or Mk 124 Mod 0 Marine Smoke and Illumination Signal Flare.

A11-17. Search and Rescue.

A11-18. Hoist cable and double rescue hook.

A11-19. Three.

A11-20. Two.

CHAPTER 12

A12-1. Fuel (combustible matter), heat, oxygen and chemical reaction.

A12-2. The "fire point" of a substance is the lowest temperature at which its vapors can be ignited and will continue to burn.

A12-3. The "flash point" of a substance is the temperature at which the substance gives off enough vapors to form an ignitable mixture with an explosive range that is capable of spreading a flame away from the source.

A12-4. Classes: A, B, C, and D.

A12-5. Water, AFFF, CO_2, Halon 1211, and PKP.

A12-6. 1 1/2 or 2 1/2 inches.

A12-7. AFFF sprinkler systems are installed in the overhead on the hanger deck.

A12-8. A standard Navy fire hose comes in 50-foot lengths.

A12-9. Aluminized protective clothing.

A12-10. The Oshkosh T-3000, P-4A, P-19, and Twinned Agent Unit (TAUs).

A12-11. A/S32P-25 fire-fighting vehicle and Twinned Agent Unit TAU-2H.

A12-12. AFFF premixed solution and a dry chemical agent.

A12-13. JP-4 jet fuel.

A12-14. Use water fog to lower battery temperature.

A12-15. Identifies hazards associated with the contents of the line.

A12-16. Through the engine air intake.

A12-17. Halon 1211 or CO_2.

A12-18. An explosion hazard.

A12-19. Fore and aft.

A12-20. Grease, hydraulic fluid, bearing lubricants, and tire rubber.

INDEX

A

Advancement and eligibility requirements, 1-15 to 1-17
Aerodynamics, physical laws affecting, 3-1 to 3-2
Aerographer's Mate (AG), 1-6
Air Traffic Controller (AC), 1-6 to 1-7
Aircraft aboard carriers, securing, 9-38 to 9-44
Aircraft avionics, 7-1 to 7-21
  aircraft storage batteries, 7-1 to 7-2
    battery safety precautions, 7-2
    lead-acid battery, 7-2
  alternating current (ac) systems, 7-3 to 7-13
    airborne auxiliary power units (APU), 7-4
    carrier aircraft electrical power servicing system, 7-4 to 7-6
    emergency electrical power, 7-3
    emergency power generators, 7-3
    engine instruments, 7-9 to 7-11
      exhaust gas temperature indicator, 7-9 to 7-10
      fuel quantity indicator, 7-10
      tachometer, 7-10
      turbine inlet temperature indicator, 7-9
      vertical scale indicator, 7-10 to 7-11
    gyroscopes, 7-12 to 7-13
      altitude indicator, 7-12 to 7-13
      turn and bank indicator, 7-13
    navigational instruments, 7-13
      gyro compass, 7-13
      horizontal situation indicator, 7-13
      magnetic (standby) compass, 7-13
    pitot-static system, 7-6 to 7-9
      airspeed and mach number indicator, 7-8
      altimeter, 7-8
      rate of climb, 7-8 to 7-9
    pressure indicating gauges, 7-9
      fuel pressure indicator, 7-9
      hydraulic pressure indicator, 7-9
      oil pressure indicator, 7-9
    antisubmarine warfare equipment (ASW), 7-20 to 7-21
      magnetic anomaly detection (MAD), 7-20 to 7-21
      sonobuoys, 7-20
    communications and navigation equipment, 7-14 to 7-20
      airborne communications equipment, 7-14 to 7-15
        long-range communications, 7-14
        short-range communications, 7-14 to 7-15
      navigational equipment, 7-15 to 7-17
        long-range navigation (loran), 7-15
        navigational computers, 7-15 to 7-17
        tactical air navigation system (TACAN), 7-15

Aircraft avionics—Continued
      radar, 7-17 to 7-20
        applications of radar, 7-18 to 7-19
          use in fire control, 7-18 to 7-19
          use in tactical air control, 7-18
        echo principles, 7-17 to 7-18
        electronic countermeasures, 7-19 to 7-20
          active, 7-20
          passive, 7-19 to 7-20
        identification friend or foe (1FF), 7-19
Aircraft basic construction, 4-1 to 4-22
  aircraft hydraulic systems, 4-19 to 4-21
    components of a basic system, 4-19 to 4-20
    hydraulic contamination, 4-20 to 4-21
  fixed-wing aircraft, 4-5 to 4-15
    arresting gear, 4-13
    catapult equipment, 4-13 to 4-15
    flight control mechanisms, 4-11 to 4-12
    flight control surfaces, 4-9 to 4-11
      auxiliary group, 4-10 to 4-11
      primary group, 4-9 to 4-10
      secondary group, 4-10
    fuselage, 4-5 to 4-7
    landing gear, 4-12 to 4-13
    stabilizers, 4-9
    wings, 4-8 to 4-9
  materials of construction, 4-4 to 4-5
    metallic materials, 4-4
    nonmetallic materials, 4-4 to 4-5
  pneumatic systems, 4-21 to 4-22
  rotary-wing aircraft, 4-15 to 4-19
    fuselage, 4-16
    landing gear group, 4-16
      tail landing gear, 4-16
    main rotor assembly, 4-17 to 4-18
      rotor head, 4-17 to 4-18
      rotary wing, 4-17
    tail rotor group, 4-18 to 4-19
      rotary rudder blades, 4-18 to 4-19
      rotary rudder head, 4-18
      pylon, 4-18
  structural stress, 4-1 to 4-4
    bending, 4-2
    compression, 4-2
    shear, 4-2
    specific action of stresses, 4-2 to 4-4
    tension, 4-1
    torsion, 4-2
    varying stress, 4-2
Aircraft carrier, organization of an, 2-11 to 2-16
  air department, 2-14 to 2-15
  aircraft intermediate maintenance department (afloat), 2-16
  carrier air wing, 2-12 to 2-14
  dental department, 2-16
  engineering department, 2-15
  medical department, 2-16
  navigation department, 2-15

Aircraft carrier, organization of an—Continued
operations department, 2-14
supply department, 2-16
weapons department, 2-15
Aircraft handling, air station, 10-33
Aircraft hardware, 5-1 to 5-22
aircraft electrical system hardware, 5-14 to 5-16
bonding, 5-16
connectors, 5-15
terminals, 5-15 to 5-16
wire and cable, 5-15
miscellaneous fasteners, 5-12 to 5-14
flat head pins, 5-13
flexible connectors/clamps, 5-14
snap rings, 5-12
taper pins, 5-13
turnbuckles, 5-12
rivets, 5-10 to 5-12
blind rivets, 5-11
rivnuts, 5-12
solid rivets, 5-11
brazier head rivets, 5-11
countersunk head rivets, 5-11
flat head rivets, 5-11
round head rivets, 5-11
universal head rivets, 5-11
safety methods, 5-16 to 5-21
cotter pins, 5-21
general safety wiring rules, 5-19 to 5-21
safety wiring, 5-16 to 5-19
electrical connectors, 5-18
nuts, bolts and screws, 5-16 to 5-18
oil caps, drain cocks and valves, 5-18
turnbuckles, 5-18 to 5-19
threaded fasteners, 5-1 to 5-7
aircraft bolts, 5-1 to 5-3
installation of nuts and bolts, 5-7
application of torque, 5-7
safetying of nuts and bolts, 5-7
nuts, 5-5 to 5-7
nonself-locking nuts, 5-5
self-locking nuts, 5-5 to 5-7
screws, 5-3 to 5-4
machine screws, 5-4
self-tapping screws, 5-4
setscrews, 5-4
structural screws, 5-4
turnlock fasteners, 5-7 to 5-10
Airloc fasteners, 5-9 to 5-10
Camloc fasteners, 5-9
Dzus fasteners, 5-10
washers, 5-21 to 5-22
lock washers, 5-22
plain washers, 5-22
special washers, 5-22
star lock washers, 5-22
tab lock washers, 5-22
Aircraft ordnance, 8-1 to 8-30
aircraft weapons and ammunition, 8-3 to 8-10
20-mm automatic aircraft guns, 8-18
airborne rockets, 8-11
aircraft bomb-type ammunition, 8-3
Aircraft ordnance—Continued
air launched guided missiles, 8-11
Advanced Medium Range Air-to-Air Missile (AMRAAM), 8-17
Harpoon, 8-14
High-Speed Antiradiation Missile (HARM), 8-17
Maverick, 8-16
Penguin, 8-17
Phoenix, 8-15
Sidewinder, 8-15
Sparrow III, 8-14
Walleye guided weapon, 8-17
Mk 80 (series) general-purpose bombs, 8-5
Cluster Bomb Units (CBUs)
antitank bomb cluster and antipersonnel/antimaterial bomb cluster
laser guided bombs, 8-9
practice bombs, 8-6 to 8-8
full-scale practice bombs, 8-6
subcaliber practice bombs, 8-6
bomb body, 8-6
suspending lugs, 8-6
fuzing, 8-6
pyrotechnics, 8-19 to 8-22
LUU-2 aircraft parachute flare, 8-21
Mk 124 Mod 0 marine smoke and illumination signal, 8-20
Mk 25 marine location marker, 8-22
Mk 58 Mod 1 marine location marker, 8-22
Mk 79 Mod 0 illumination signal kit, 8-21
underwater weapons, 8-18
aircraft laid mines, 8-18
torpedoes, 8-18
aircraft weapons suspension and releasing equipment, 8-24 to 8-30
aircraft rocket launchers, 8-29
bomb ejector racks, 8-25
bomb racks, 8-25
bomb shackles, 8-27
dispensers and ejectors, 8-31
AN/ALE-29A countermeasures chaff dispensing set, 8-28
SUU-25F/A flare dispenser, 8-27
guided missile launchers, 8-28
LAU-7/A guided missile launcher, 8-29
LAU-92/A guided missile launcher, 8-29
cartridges and cartridge-actuated devices (CADs), 8-22 to 8-24
impulse and delay cartridges, 8-23
CCU-45/B impulse cartridge
Mk 19 Mod 0 impulse cartridge, 8-24
miscellaneous cartridges, 8-24
Mk 97 Mod 0 impulse cartridge, 8-24

Aircraft ordnance—Continued
Mk 1 Mod 3 impulse cartridge, 8-24
aircraft fire-extinguisher cartridge, 8-24
personnel escape device cartridges, 8-24
fundamentals of explosives, the, 8-2 to 8-3
high and low explosives, 8-2 to 8-3
identification and marking of ordnance, 8-3
general terminology and definitions, 8-1 to 8-2
Aircraft power plants, 6-1 to 6-19
engine identification, 6-16 to 6-19
ANA Bulletin No. 306M designation system, 6-16 to 6-18
manufacturer's symbol, 6-16
model numbers, 6-16 to 6-17
special designations, 6-17 to 6-18
type symbols, 6-16
MIL-STD-1812 designation system, 6-18
manufacturer's symbol, 6-18
model indicator, 6-18
type indicator, 6-18
power plant safety precautions, 6-19
engine noise, 6-19
exhaust area, 6-19
intake ducts, 6-19
principles of operation, 6-1 to 6-16
Brayton cycle, the, 6-15 to 6-16
component controls, systems, and sections, 6-12 to 6-15
accessory section, 6-15
fuel control, 6-12 to 6-13
ignition system, 6-13 to 6-15
lubrication system, 6-13
jet propulsion engines, 6-1 to 6-12
gas turbine engines, 6-5 to 6-12
pulsejet engines, 6-4 to 6-5
ramjet engines, 6-2 to 6-4
rocket engines, 6-1 to 6-2
Aircrew survival equipment, 11-1 to 11-25
flight clothing, 11-1 to 11-5
antiexposure coverall, 11-4
anti-g coveralls, 11-3
flight boots, 11-1
flight coveralls (cold weather), 11-1
flight coveralls (summer weight), 11-1
flight gloves, 11-2
helmet, 10-2 to 10-3
cloth helmet assembly, the (cranial protector), 10-3
HGU-68(V)/P helmet, 11-2
HGU-84/P helmet, 11-3
life preservers, 11-9 to 11-12
flight deck inflatable life preserver, 11-12
life preserver passenger (LPP), 11-9
flotation assembly, 11-10
inflation assembly, 11-10
pouch and belt assembly, 11-10
storage container, 11-10
survival items, 11-10
Aircraft survival equipment—Continued
toggle assembly, 11-10
life preserver unit (LPU), 11-11
casing assembly, 11-12
flotation assembly, 11-11
survival item pouches, 11-19 to 11-21
multiplace life rafts, 11-14 to11-17
seven-man life raft, the, 11-16
twenty-man life raft, the, 11-16
one-man life raft, 11-13
one-man life raft container, 11-13
survival items, 11-14 to11-17
parachutes, 11-5 to 11-8
NES parachute, 11-5
parachute handling and care, 11-8
parachute harnesses, 11-6
canopy, 11-7
integrated torso harness suit, the, 11-6
parachute container, 11-6
pilot chute, 11-8
suspension lines, 11-7
personal survival equipment, 11-17
survival radios and beacons, 11-21
survival vest 11-18
distress marker light (strobe), 11-21
individual survival kit, 11-18
Mk-13 Mod 0 marine smoke and illumination signal, 11-20
Mk 79 Mod 0 illumination signal kit, 11-19
MK-124 Mod 0 marine smoke and illumination signal, 11-21
service pistol, 11-18
sheath knife, 11-18
signaling mirror, 11-18
water bottle, 11-20
rescue, 11-21 to 11-25
rescue equipment, 11-21
forest penetrator, 11-23
gated D-ring, 11-6
helicopter rescue strap, 11-22
hoisting cable and rescue hook assembly, 11-21
medivac litter, 11-23
rescue net, 11-23
survivors rescue strop, 11-22
sea resuce, 11-24
Aircrew Survival Equipmentman, (PR), 1-8
Airfield danger areas, standard markings for, 11-25
Airfoil, the 3-2 to 3-3
Airman duties, 1-13
Airman rate, history of the, 1-5
Aviation Antisubmarine Warfare Systems Operator (AW), 1-8
Aviation Boatswain's Mate, Aircraft Handling (ABH), 1-9
Aviation Boatswain's Mate, Fuels (ABF), 1-9
Aviation Electrician's Mate (AE), 1-9
Aviation Electronics Technician (AT) O&I, 1-9
Aviation Machinist's Mate (AD), 1-10
Aviation Maintenance Administrationman, (AZ), 1-10

Aviation Ordnanceman (AO), 1-10
Aviation ratings, 1-6
aviation general ratings, 1-6
aviation service ratings, 1-6
Aviation Storekeeper (AK), 1-10 to 1-11
Aviation Structural Mechanic (AM), 1-11 to 1-12
Aviation Structural Mechanic, Hydraulics (AMH), 1-11
Aviation Structural Mechanic, Structures (AMS), 1-11 to 1-12
Aviation Support Equipment Technician (AS), 1-12

B

Batteries, aircraft storage, 7-1 to 7-2
battery safety precautions, 7-2
battery (lead-acid), 7-1
battery (nickel-cadmium), 7-1
Boeing-Vertol Sea Knight, H-46
Bolts, aircraft, 5-1 to 5-3
Bomb, body, 8-6
Bomb, fin assemblies, 8-6
Bomb, fuzing, 8-6
Bomb, suspending lugs, 8-6
Bomb ejector rack, 8-25 to 8-26
Bomb rack, 8-25 to 8-26
Bomb shackles, 8-27
Bomb-type ammunition, aircraft, 8-3
Bombs, Mk 80 (series) general-purpose, 8-5
Bombs, personnel and material, 8-9
Bombs, practice, 8-6
full-scale practice bombs, 8-6
subcaliber practice bombs, 8-6
Boots, flight, 11-1
Brayton cycle, the, 6-15 to 6-16
B-2 maintenance platform, 9-17
B-4 maintenance platform, 9-18

C

CADs (cartridges and cartridge-actuated devices), 8-24
Career planning, 1-17
Carrier divisions, 2-16 to 2-17
Cartridges miscellaneous, 8-24
Catapult launching, 9-37 to 9-38
Chain of command, naval aviation, 2-1
Chemicals, dry, 11-16 to 11-17
Cloth helmet assembly, the (cranial protector), 10-3
CO_2 fire extinguisher, 11-15 to 11-16
Communications and navigation equipment, 7-13
Computers, navigation, 7-15 to 7-17
Cotter pins, 5-21
Coverall, antiexposure, 11-1
Coveralls, anti-g, 11-3
Cranes, crash and salvage, 9-4
Cranes, maintenance, 9-7
Crash rescue and fire fighting, 12-1 to 12-21
classes of fire, 12-2 to 12-3
class A, 12-2
class B, 12-3
class C, 12-3
Crash rescue and fire fighting—Continued
class D, 12-3
chemistry of fire, 12-1 to 12-2
extinguishing agents, 12-3 to 12-4
carbon dioxide, 12-3 to 12-4
chemical foam (AFFF), 12-3
chemical/mechanical foam (protein type), 12-3
dry chemical (PKP), 12-4
Halon 1211, 12-4
water, 12-3
fire-fighting equipment, 12-6
aircraft fire-fighting and rescue trucks, 12-6 to 12-12
firemain system aboard ship, 12-4 to 12-6
mobile maintenance cranes, 9-7
Oshkosh T-3000 fire-fighting truck, 12-9
P-4A truck, 12-9 to12-10
P-19 truck, 12-10
P-25 truck 12-10 to 12-11
protective clothing, 12-8
tools, 12-7
fire-fighting techniques, 12-18 to 12-21
aircraft fire hazards, 12-18 to 12-21
armament, 12-16
battery switch, 12-16
engine accessory section, 12-15
ejection seat, 12-16
fuel spills, 12-16
hydraulic system, 12-16
selector valve, 12-16
ordnance stores, 12-14
CO_2 fire extinguisher, 12-3 to 12-4
dry chemicals, 12-4
vehicle-mounted twin agent unit, 12-11 to 12-12
wheel fires, 12-20 to 12-21
fluid line identification, 12-16
line safety precautions, 10-1 to 10-50
color and marking of equipment, 12-2
hot brakes, 12-20
seat-ejection mechanisms and power-operated canopies, 12-16
operating vehicles on airfields, 10-1
driver/operator training, 9-19
safety precautions, 10-1
standard markings for airfield danger areas, 10-48 to 10-50
safety precautions, 12-13
types and identifying characteristics of various fuels, 12-13
Crash and salvage equipment, 9-4
A/S32A-35A (CVCC) aircraft crash and salvage crane, 9-4
A/S32A-36A (CVCC) aircraft crash and salvage crane, 9-4

D

Designations, guided missile and rocket, 8-12
Dispensers and ejectors, 8-27
Directing taxiing aircraft, 10-6

E

Echo principles, 7-17 to 7-18
Electrical power, emergency, 7-3
Electrical system hardware, aircraft, 5-14 to 5-16
Electronic countermeasures, 7-19 to 7-20
Emergency recovery equipment, 10-8
Engine identification, 6-16 to 6-19
Engine instruments, 7-9 to 7-1 1
Equipment color and marking of, 10-2
Equipment, types of, 9-1 to 9-20
    handling equipment, 9-1 to 9-5
    servicing equipment, 9-8
Exhaust gas temperature indicator, 7-9 to 7-10
Explosives, high and low, 8-2
Explosives, the fundamentals of, 8-2
Extinguishing agents, 11-2 to 11-4
    carbon dioxide, 12-3
    chemical foam (AFFF), 12-3
    chemical/mechnaical foam (protein type), 12-3
    dry chemical (PKP), 12-4
    Halon 12-11, 12-4
    water, 12-3

F

Fasteners, threaded, 5-1 to 5-7
Fire, chemistry of, 12-1
Fire hazards, aircraft, 12-13
Fire-extinguisher cartridge, aircraft, 8-24
Fire-fighting and rescue trucks, aircraft, 12-10
Fire fighting equipment, 12-5 to 12-12
Fire fighting techniques, 12-13 to 12-19
Firemain system aboard ship, 12-5 to 12-6
Fixed wing aircraft, 3-6, 4-5 to 4-15
Flat head pins 5-13
Flexible connectors/clamps, 5-14
Flight clothing, 10-1 to 10-6
Flight coveralls (intermediate weight), 10-2
Flight coveralls (summer weight), 10-2
Flight, forces affecting, 3-3 to 3-4
    drag, 3-4
    lift, 3-4
    thrust, 3-4
    weight, 3-4
Flotation assembly, 10-12
Fluid line identification, 12-16
Forest penetrator, 11-23
Forklift truck, 9-8
Fuel pressure indicator, 7-9
Fuel quantity indicator, 7-10
Fuels, types and identifying characteristics of various, 12-13

G

Gas turbine enclosure, 9-5
Gas turbine engines, 6-5 to 6-12
Gated D-ring, 11-6
Global positioning system (GPS), 7-15
Glossary, AI-1 to AI-4
Gloves, flight, 11-2
Grumman Hawkeye, E-2, 2-21
Grumman Prowler, EA-6, 2-21
Grumman Tomcat, F-14, 2-20
Guided missile and rocket designations, 8-12
Guided missile launchers, 8-28
Guided missiles, air-launched, 8-11
    Advanced Medium Range Air-to-Air Missile (AMRAAM), 8-17
    Harpoon, 8-14
    High-Speed Antiradiation Missile (HARM), 8-17
    Maverick, 8-16
    Penguin, 8-17
    Phoenix, 8-15
    Sidewinder, 8-15
    Sparrow III, 8-14
    Walleye guided weapon, 8-17
Guns, 20-mm automatic aircraft, 8-18
Gyro compass, 7-13
Gyroscopes, 7-12 to 7-13

H

Hand signals, 10-10 to 10-25 and 10-37 to 10-47
HARM (High-Speed Antiradiation Missile), 8-17
Helicopter handling, 10-35
Helicopter rescue strap, 11-22
Helmet(s), 11-2 to 11-3
Horizontal situation indicator, 7-13
Hydraulic jacks, 9-17
Hydraulic pressure indicator, 7-9
Hydraulic systems, aircraft, 4-19 to 4-21
Hydraulic portable power supply, 9-12

I

IFF (identification friend or foe), 7-19
Illumination devices, aircraft-launched, 8-21
Illumination devices, hand-held, 8-20
Impulse and delay cartridges, 8-25 to 8-26

J

Jet propulsion engines, 6-1 to 6-12
    gas turbine engines, 6-5 to 6-12
    pulsejet engines, 6-4 to 6-5
    ramjet engines, 6-2 to 6-4
    rocket engines, 6-1 to 6-2

L

Landing gear, fixed-wing aircraft, 4-12 to 4-13
Landing gear group, rotary-wing aircraft, 4-16
Laser guided bombs, 8-9
Leadership, 1-17
Life preserver, flight deck inflatable, 11-12
Life preserver passenger (LPP), 11-9
Life preserver unit (LPU), 11-11
Life rafts, 11-16 to 11-20
    multiplace life rafts, 11-14
    one-man life raft, 11-113
Lockheed Orion, P-3, 2-21

Lockheed Viking, S-3, 2-21
Loran (long-range navigation), 7-15

M

MAD (magnetic anomaly detection), 7-20 to 7-21
Magnetic (standby) compass, 7-13
Maintenance requirements, 9-18
Maintenance platforms, 9-17 to 9-18
McDonnell-Douglas Harrier II, AV-8, 2-21
McDonnell-Douglas Hornet, F/A-18, 2-19
Metallic materials, 4-4
Mines, aircraft laid, 8-10
    Mk 62, influence-actuated, bottom
    Mk 63, influence-actuated, bottom
    Mk 64, influence-actuated, bottom
    Mk 65, quickstrike
Mission and history of naval aviation, 1-1 to 1-17
    advancement and eligibility requirements, 1-15 to 1-17
    advancement advantages, 1-16 to 1-17
        career planning, 1-17
            consider your aptitudes, 1-17
            learn about the rating, 1-17
        military and professional requirements, 1-15 to 1-16
                sources of information, 1-16
                training manuals, 1-16
        studying for advancement, 1-16
    airman duties, 1-13
    assignments, 1-13
    aviation ratings, 1-6
        aviation general ratings, 1-6
        aviation service ratings, 1-6
    description of aviation ratings, 1-6 to 1-12
        Aerographer's Mate (AG), 1-6
        Air Traffic Controller (AC), 1-6 to 1-7
        Aircrew Survival Equipmentman (PR), 1-8
        Aviation Antisubmarine Warfare Systems Operator (AW), 1-8
        Aviation Boatswain's Mate (AB), 1-8 to 1-9
            Aviation Boatswain's Mate, Aircraft Handling (ABH), 1-9
            Aviation Boatswain's Mate, Fuels (ABF), 1-9
        Aviation Electrician's Mate (AE), 1-9
        Aviation Electronics Technician (AT), O&I 1-9
        Aviation Machinist's Mate (AD), 1-10
        Aviation Maintenance Administrationman (AZ), 1-10
        Aviation Ordnanceman (AO), 1-10
        Aviation Storekeeper (AK), 1-10 to 1-11
            Aviation Structural Mechanic (AM), 1-11 to 1-12
                Aviation Structural Mechanic, Hydraulics (AMH), 1-11
                Aviation Structural Mechanic, Safety Equipment (AME), 1-11
                Aviation Structural Mechanic, Structures (AMS), 1-11 to 1-12
Mission and history of naval aviation—Continued
            Aviation Support Equipment Technician (AS), 1-12
            Photographer's Mate (PH), 1-12
        history of naval aviation, 1-2 to 1-5
            historic events of naval aviation, 1-2 to 1-4
            major naval aviation battles, 1-4 to 1-5
    history of the airman rate, 1-5
    leadership, 1-17
    Navy schools, 1-14
    Navy training courses, 1-15
    training, 1-13 to 1-14
Motion, laws of, 3-1 to 3-2
    Newton's first law of motion, 3-1
    Newton's second law of motion, 3-1
    Newton's third law of motion, 3-2
Multiengine aircraft handling, 10-34

N

Naval air facility, 2-7
Naval air station (NAS) organization, 2-2 to 2-7
    administration department, 2-3
    air operations department, 2-4
        aircraft intermediate maintenance department (AIMD), 2-5 to 2-7
        comptroller department, 2-3 to 2-4
        consolidated civilian personnel office, 2-4
        dental department, 2-4
        medical department, 2-4
        public works department, 2-4
        security department, 2-4
        supply department, 2-4
        weapons department, 2-4
    Naval aviation depots, 2-7
Naval aviation, history of, 1-2 to 1-5
    historic events of naval aviation, 1-2 to 1-4
    major naval aviation battles, 1-4 to 1-5
Naval aviation, the mission of, 1-1 to 1-2
Navigational instruments, 7-13
NES parachute, 11-5
Nitrogen service unit (NAN-4), 9-14
Nonmetallic materials, 4-4
Nuts, 5-5 to 5-7
    nonself-locking nuts, 5-5
    self-locking nuts, 5-5 to 5-7
Nuts and bolts, installation of, 5-7

O

Oil pressure indicator, 7-9
Ordnance, aircraft, 8-1 to 8-30
Ordnance, identification and marking of, 8-12
Organization of naval aviation, 2-1 to 2-22
    designation and types of naval aircraft, 2-17 to 2-22
    naval aviation chain of command, 2-1
    naval aviation establishments, 2-2 to 2-17
        carrier divisions, 2-16 to 2-17
        naval air facility, 2-7

Organization of naval aviation—Continued
naval air station (NAS) organization, 2-2 to 2-7
administration department, 2-3
air operations department, 2-4
aircraft intermediate maintenance department (AIMD), 2-5 to 2-7
comptroller department, 2-3 to 2-4
consolidated civilian personnel office, 2-4
dental department, 2-4
medical department, 2-4
public works department, 2-4
security department, 2-4
supply department, 2-4
weapons department, 2-4
naval aviation depots, 2-7
organization of a squadron, 2-8 to 2-11
aircraft squadron departments, 2-9 to 2-10
commanding officer (CO), 2-8
executive officer (XO), 2-8 to 2-9
maintenance administration, 2-11
maintenance/material control officer, 2-10
maintenance officer, 2-10
quality assurance/analysis, 2-11
types of divisions, 2-11
organization of an aircraft carrier, 2-1l to 2-16
air department, 2-14 to 2-15
aircraft intermediate maintenance department (afloat), 2-16
carrier air wing, 2-12 to 2-14
dental department, 2-16
engineering department, 2-15
medical department, 2-16
navigation department, 2-15
operations department, 2-14
supply department, 2-16
weapons department, 2-15
types of squadrons, 2-7 to 2-8
carrier squadrons, 2-7 to 2-8
composite squadrons, 2-8
noncombatant squadrons, 2-8
patrol squadrons, 2-8
typical carrier schedule, 2-17
Oxygen servicing unit, 9-14

P

Parachute container, 11-6
Parachute handling and care, 11-8
Parachute harnesses, 11-6
Parachutes, 11-5 to 11-8
Personnel escape device cartridges, 8-22
Photographer's Mate (PH), 1-12
Pilot chute, 11-8
Pitot-static system, 7-6 to 7-9
airspeed and mach number indicator, 7-8
altimeter, 7-8
rate of climb, 7-8 to 7-9
Plane-handling crews, 10-2
Pneumatic systems, 4-21 to 4-22
Pouch and belt assembly, 11-10
Power generators, emergency, 7-3
Principles of flight, 3-1 to 3-8
airfoil, the, 3-2 to 3-3
airflow around an airfoil, 3-3
airfoil terminology, 3-2
fixed-wing and rotary-wing aircraft, 2-17
fixed-wing aircraft, 2-17 to 2-21
rotary-wing aircraft (helicopters), 2-21 to 2-22
directional control, 3-7
hovering, 3-7
lift, 3-6 to 3-7
torque reaction, 3-8
forces affecting flight, 3-3 to 3-4
drag, 3-4
lift, 3-4
thrust, 3-4
weight, 3-4
physical laws affecting aerodynamics, 3-1 to 3-2
Bernoulle's principle, 3-2
laws of motion, 3-i to 3-2
Newton's first law of motion, 3-1
Newton's second law of motion, 3-1
Newton's third law of motion, 3-2
rotational axes, 3-4 to 3-6
lateral axis, 3-4
longitudinal axis, 3-4
vertical axis, 3-4 to 3-6
Protective clothing, 12-8
Pulsejet engines, 6-4 to 6-5
Pyrotechnics, 8-19 to 8-22

R

Radar, 7-17 to 7-20
Radios and beacons, survival, 11-21
Ramjet engines, 6-2 to 6-4
References, AII-1 to AII-3
Rescue, sea, 11-21 to 11-25
Rescue equipment, 11-21
Rivets, blind, 5-11
Rivets, solid, 5-11
brazier head rivets, 5-11
countersunk head rivets, 5-11
flat head rivets, 5-l1
round head rivets, 5-11
universal head rivets, 5-11
Rivnuts, 5-12
Rocket engines, 6-i to 6-2
Rocket launchers, aircraft, 8-29
Rockets, airborne, 8-11
Rotary-wing aircraft (helicopters), 2-20 to 2-22
Rotational axes, 3-4 to 3-6
lateral axis, 3-4
longitudinal axis, 3-4
vertical axis, 3-4 to 3-6
Rotor head, 4-17 to 4-18

S

Safety precautions, line, 10-48
Safety precautions, power plant, 6-19
Schedule, typical carrier, 2-17
Schools, Navy, 1-14
Screws, 5-3 to 5-4
    self-tapping screws, 5-4
    setscrews, 5-4
    structural screws, 5-4
Seat-ejection mechanisms and power-operated canopies, 8-22
Shipboard fire-fighting vehicle, A/S32P-25, 9-5
Sikorsky Sea King, H-3, 2-21
Sikorsky Sea Hawk, H-60, 2-22
Sikorsky Super Stallion, H-53, 2-22
Snap rings, 5-12
Sonobuoys, 7-20
Spotting aircraft, 10-8
Squadron, organization of a, 2-8 to 2-11
    aircraft squadron departments, 2-9 to 2-10
    commanding officer (CO), 2-8
    executive officer (XO), 2-8 to 2-9
    maintenance administration, 2-1l
    maintenance/material control officer, 2-10
    maintenance officer, 2-10
    quality assurance analysis, 2-l1
    types of divisions, 2-11
Squadrons, types of, 2-7 to 2-8
    carrier squadrons, 2-7 to 2-8
    composite squadrons, 2-8
    patrol squadrons, 2-8
Standard Antiradiation Missile (ARM), 8-19
Structural stress, 4-i to 4-4
    bending, 4-2
    compression, 4-2
    shear, 4-2
    tension, 4-1
    torsion, 4-2
    varying stress, 4-2
Support equipment, hazards of, 10-1 to 10-2
Support equipment ,9-1 to 9-20
    aircraft handling, 10-1
        air station aircraft handling, 10-33
        catapult launching, 10-3
            aircraft towing, 10-31
            recovery, 10-7
        general safety precautions for handling aircraft aboard carriers, 10-32
        helicopter handling, 10-35
            helicopter tie-down and securing procedures, 10-35
        multiengine aircraft handling 10-34
            aircraft fittings, 10-47
            securing aircraft ashore, 10-26
        securing aircraft aboard carriers, 10-26
            aircraft-handling accessories, 10-29
            cold weather procedures, 10-28
            heavy weather procedures, 10-28
            normal weather conditions, 10-27
        spotting aircraft, 10-8
        air operations aboard a carrier, 10-2
            landing procedure, 10-7
Support equipment—Continued
            launching procedure, 10-3
            plane-handling crews, 10-2
        aircraft handling accessories, 10-29
        aircraft handling equipment, 9-1
            A/S 32A-30 aircraft support equipment towing tractor, 9-1
            A/S 32A-30A tow tractor, 9-1
            A/S 32A-31 tow tractor, 9-2
            A/S 32A-32 tow tractor, 9-2
            A/S32A-37 tow tractor, 9-3
            A/S32A-42 tow tractor, 9-3
            A/S32A-35A (CVCC) aircraft crash and salvage crane, 9-4
            A/S32A-36A (CVCC) aircraft crash and salvage crane, 9-4
            hazards of SE, 10-1 to 10-2
            maintenance requirements, 9-18
                periodic maintenance, 9-18
                preoperational maintenance, 9-19
                qualifications for operating SE, 9-19
            operating equipment around aircraft, 10-33
            servicing equipment, 9-8
                A/M47A-4 jet aircraft start unit, 9-11
                A/S47A-1 jet aircraft start unit, 9-12
                A/M27T-5 hydraulic portable power supply, 9-12
                A/M27T-7 hydraulic portable power supply, 9-12
                A/M 26U-4 (NAN-4) nitrogen servicing unit, 9-14
                A/M32C-17 air-conditioner, 9-15
                A/M32C-21 air-conditioner, 9-17
                A/U26U-1 oxygen servicing unit, 9-14
                gas turbine enclosure, 9-12
                hydraulic jacks, 9-17
                MMG-1A mobile electric power plant, 9-11
                NC-2A mobile electric power plant, 9-9
                NC-8A mobile electric power plant, 9-10
                NC-10C mobile electric power plant,
                9-10
                TMU 70/M oxygen storage tank, 9-15
Survival equipment, personal, 11-17 to 11-21

T

TACAN (tactical air navigation system), 7-15
Tachometer, 7-10
Tail rotor group, 4-18 to 4-19
    pylon, 4-18
    rotary rudder blades, 4-18 to 4-19
    rotary rudder head, 4-18

Taper pins, 5-13
Terminology and definitions, 8-1 to 8-2
Torpedoes, 8-20
Tractors, 9-1
Training, 1-13 to 1-14
Training courses, Navy, 1-15
Training, driver/operator, 9-19
Turbine inlet temperature indicator, 7-9
Turn and bank indicator, 7-12 to 7-13
Turnbuckles, 5-12
Turnlock fasteners, 5-7 to 5-10
    Airlock fasteners, 5-9 to 5-10
    Camloc fasteners, 5-9
    Dzus fasteners, 5-10

U

Underwater weapons, 8-18

V

Vertical axis, 3-4
Vertical scale indicator, 7-10 to 7-1 1

W

Walleye guided weapon, 8-17
Washers, 5-21 to 5-22
    lock washers, 5-22
    plain washers, 5-22
    special washers, 5-22
    star lock washers, 5-22
    tab lock washers, 5-22
Weapons and ammunition, aircraft, 8-1 to 8-30
Wiring rules, general safety, 5-19 to 5-21