CHAPTER 3

HYDRAULIC AND PNEUMATIC SYSTEMS

INTRODUCTION

Learning Objective: Explain the operating principles of hydraulic and pneumatic systems. Identify the components, component functions, and maintenance procedures of hydraulic and pneumatic systems.

In automotive and construction equipment, the terms *hydraulic* and *pneumatic* describe a method of transmitting power from one place to another through the use of a liquid or a gas. Certain physical laws or principles apply to all liquids and gases. You should be familiar with the following terms, as they are associated with hydraulic and pneumatic systems.

- **HYDRAULICS** is a branch of science that deals with the study and use of liquids as related to the mechanical aspects of physics.
- **PNEUMATICS** is a branch of science that deals with the study and use of air and other gases as related to the mechanical aspects of physics.

The chapter covers the basic principles associated with hydraulics and pneumatics, followed by coverage of various system components. The purpose of this information is to give you an analytical understanding of the interrelationships of principles and the components in an operating system.

HYDRAULIC SYSTEMS

Learning Objective: Identify operational characteristics, component functions, and maintenance procedures of a hydraulic system.

The extensive use of hydraulics to transmit power is due to the fact that a properly constructed hydraulic system possesses a number of favorable characteristics. These are as follows:

- Eliminates the need for complicated systems using gears, cams, and levers.
- Motion can be transmitted without the slack inherent in the use of solid machine parts.
- The fluids used are not subject to breakage as are mechanical parts.
- Hydraulic system mechanisms are not subjected to great wear.

If the system is well-adapted to the work it is required to perform and not misused, it can provide smooth, flexible, uniform action without vibration and is unaffected by variation of load. Hydraulic systems can provide widely variable motions in both rotary and straight-line transmission of power. The need for control by hand can be minimized. In addition, they are economical to operate.

BASIC PRINCIPLES OF HYDRAULICS

The basic principles of hydraulics are few and simple and are as follows:

- Liquids have no shape of their own.
- Liquids will **NOT** compress.
- Liquids transmit applied pressure in all directions.
- Liquids provide great increase in work force.

Pressure and Force

The terms *force* and *pressure* are used extensively in the study of fluid power. It is essential that we distinguish between these terms. Force means a total push or pull. It is push or pull exerted against the total area of a particular surface and is expressed in pounds or grams. Pressure means the amount of push or pull (force) applied to each unit area of the surface and is expressed in pounds per square inch (lb/in^2) or grams per square centimeter (gm/cm^2). Pressure may be exerted in one direction, in several directions, or in all directions.

Computing Force, Pressure, and Area

A formula is used in computing force, pressure, and area in hydraulic systems. In this formula, P refers to pressure, F indicates force, and A represents area.

Force equals pressure times area. Thus, the formula is written $F = P \times A$

Pressure equals force divided by area. By rearranging the above formula, this state may be condensed into the following: P = F divided by A.

Since area equals force divided by pressure, the formula for area is written as follows: A = F divided by P

Figure 3-1 shows a memory device for recalling the different variations of the formula. Any letter in the triangle may be expressed as the product or quotient of the other two, depending on its position within the triangle.

Incompressibility and Expansion of Liquids

For all practical purposes, fluids are incompressible. Under extremely high pressures: the volume of a fluid can be decreased somewhat, though the decrease is so slight that it is considered to be negligible except by design engineers.

Liquids expand and contract because of temperature changes. When liquid in a closed container is subjected to high temperatures, it expands and this exerts pressure on the walls of the container; therefore, it is necessary that pressure-relief mechanisms and expansion chambers be incorporated into hydraulic systems. Without these precautionary measures, the expanding fluid could exert enough pressure to rupture the system.

Transmission of Forces through Liquids

When the end of a solid bar is struck, the main force of the blow is carried straight through the bar to the other end (fig. 3-2, view A). This happens because the bar is rigid. The direction of the blow almost entirely determines the direction of the transmitted force. The more rigid the bar, the less force is lost inside the bar or transmitted outward at right angles to the direction of the blow.

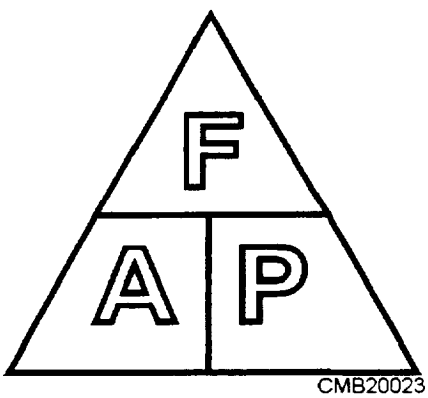

Figure 3-1.—Device for determining the arrangement of the force, pressure, and area formula.

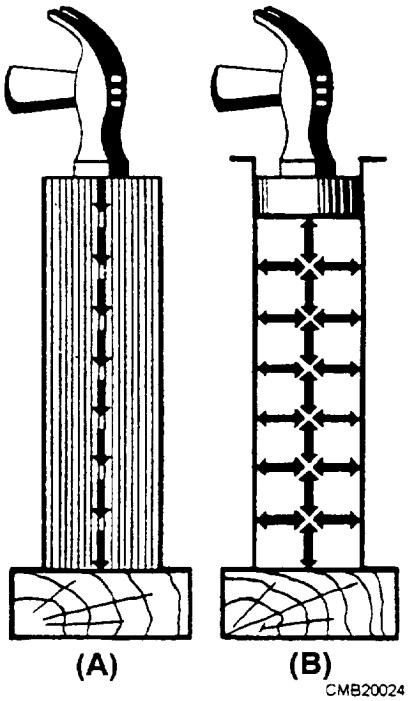

Figure 3-2.—Transmission of force: (A) Solid; (B) Fluid.

When a force is applied to the end of a column of confined liquid (fig. 3-2, view B), it is transmitted straight through the other end and also undiminished in every direction throughout the column—forward, backward, and sideways—so that the containing vessel is literally tilled with pressure.

An example of this distribution of force is shown in figure 3-3. The flat hose takes on a circular cross section when it is filled with water under pressure. The outward push of the water is equal in every direction.

Pascal's Law

The foundation of modern hydraulics was established when Blaise Pascal, a French scientist,

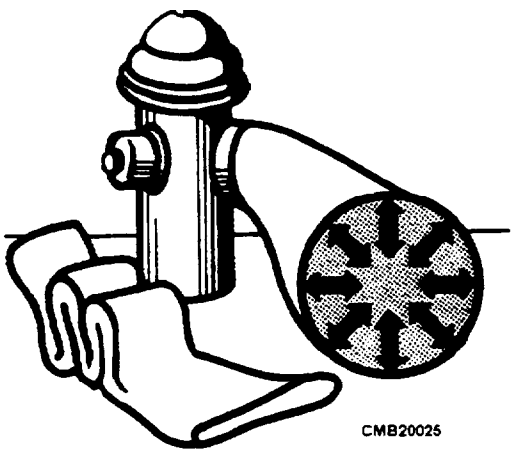

Figure 3-3.—Distribution of force.

discovered the fundamental law for the science of hydraulics. Pascal's law tells us that **pressure on a confined fluid is transmitted undiminished in every direction, and acts with equal force on equal areas, throughout the confining vessel or system.**

According to Pascal's law, any force applied to a confined fluid is transmitted in all directions throughout the fluid regardless of the shape of the container. Consider the effect of this in the systems shown in views A and B of figure 3-4. If there is resistance on the output piston (view A, piston 2) and the input piston is pushed downward, a pressure is created through the fluid which acts equally at right angles to surfaces in all parts of the container.

If the force 1 is 100 pounds and the area of input piston 1 is 10 square inches, then pressure in the fluid is 10 psi (100 ÷ 10). It must be emphasized that this fluid pressure cannot be created without resistance to flow, which, in this case, is provided by the 100-pound force acting against the top of the output piston 2. This pressure acts on piston 2, so for each square inch of its area, it is pushed upward with the force of 10 pounds. In this case, a fluid column of a uniform cross section is considered so the area of output piston 2 is the same as input piston 1, or 10 square inches; therefore, the upward force on output piston 2 is 100 pounds—the same as was applied to input piston 1. All that has been accomplished in this system was to transmit the 100-pound force around a bend; however, this principle underlies practically all-mechanical applications of fluid power.

At this point, it should be noted that since Pascal's law is independent of the shape of the container, it is not necessary that the' tubing connecting the two pistons should be the full area of the pistons. A connection of any size, shape, or length will do so long as an unobstructed passage is provided. Therefore, the system shown in view B of figure 3-4 (a relatively small, bent pipe connects the two cylinders) will act the same as that shown in view A.

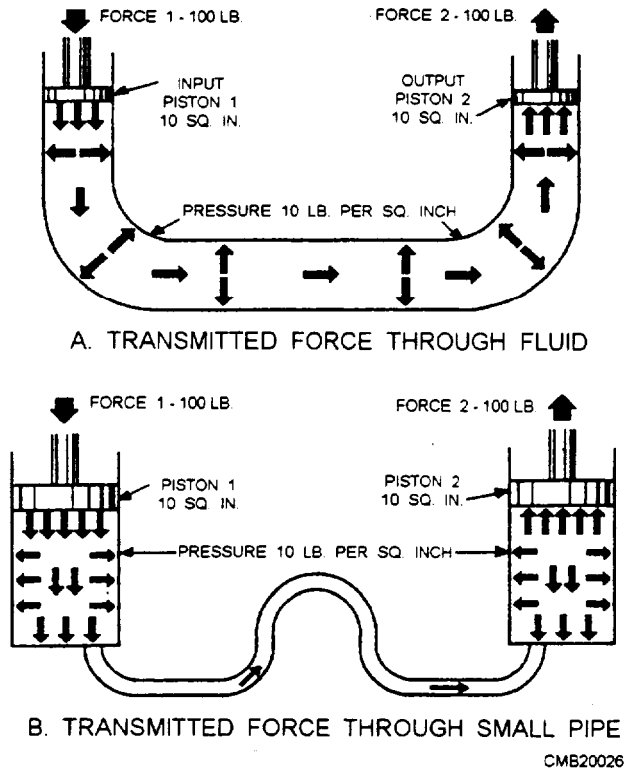

Figure 3-4.—Force transmitted from piston to piston.

Multiplication of Forces

Some hydraulic systems are used to multiply force. In figure 3-5, notice that piston 1 is smaller than piston 2. Assume that the area of the input piston 1 is 2 square inches. With a resistant force on piston 2, a downward force of 20 pounds acting on piston 1 creates 10 psi (20 ÷ 2) in the fluid. Although this force is much smaller than the applied forces in figure 3-4, the pressure is the same because the force is concentrated on a relatively small area.

This pressure of 10 psi acts on all parts of the fluid container, including the bottom of output piston 2; therefore, the upward force on output piston 2 is 10 pounds for each of its 20 square inches of area, or 200 pounds (10 x 20). In this case, the original force has been multiplied tenfold while using the same pressure in the fluid as before. In any system with these dimensions, the ratio of output force to input force is always 10 to 1 regardless of the applied force; for example, if the applied force of input piston 1 is 50 pounds, the pressure in the system is increased to 25 psi. This will support a resistant force of 500 pounds on output piston 2.

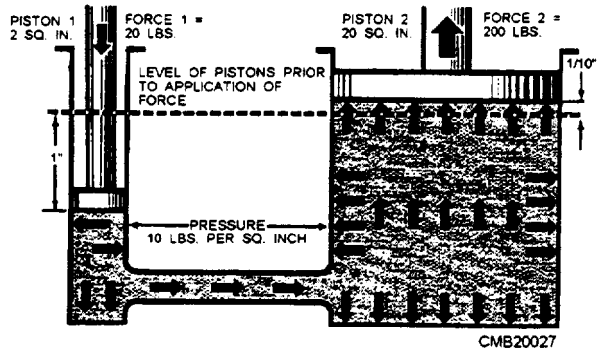

Figure 3-5.—Multiplication of force in a hydraulic system.

The system works the same in reverse. Consider piston 2 as the input and piston 1 as the output; then the output force will always be one tenth of the input force.

Therefore, the first basic rule for two pistons used in a fluid power system is **the force acting on each is directly proportional to its area, and the magnitude of each force is the product of the pressure and its area is totally applicable.**

Volume and Distance Factors

In the systems shown in views A and B of figure 3-4, the pistons have areas of 10 square inches. Since the areas of the input and output pistons are equal, a force of 100 pounds on the input piston will support a resistant force of 100 pounds on the output piston. At this point the pressure of the fluid is 10 psi. A slight force in excess of 100 pounds on the input piston will increase the pressure of the fluid, which, in turn, overcomes the resistance force. Assume that the output piston is forced downward 1 inch. This action displaces 10 cubic inches of fluid (1 in. x 10 sq. in. = 10 cubic inches). Since liquid is practically incompressible, this volume must go some place. This volume of fluid moves the output piston. Since the area of the output piston is likewise 10 square inches, it moves 1 inch upward to accommodate the 10 cubic inches of fluid. The pistons are of equal areas; therefore, they will move the same distance, though in opposite directions.

Applying this reasoning to the system in figure 3-5, it is obvious that if the input piston 1 is pushed down 1 inch, only 2 cubic inches of fluid is displaced. The output piston 2 will move only one tenth of an inch to accommodate these 2 cubic inches of fluid, because its area is 10 times that of input piston 1. This leads to the second basic rule for two pistons in the same fluid power system. which is **the distances moved are inversely proportional to their areas.**

While the terms and principles mentioned above are not all that apply to the physics of fluids, they are sufficient to allow further discussion in this training manual (TRAMAN). The TRAMAN, *Fluid Power,* NAVEDTRA 12964, should be obtained and studied for more comprehensive coverage of this subject.

TYPES OF HYDRAULIC FLUIDS

There have been many liquids tested for use in hydraulic systems. Currently liquids being tested include mineral oil, water, phosphate ester, water-based ethylene glycol compounds, and silicone fluids. The three most common types of hydraulic fluids are petroleum-based, synthetic fire-resistant, and water-based fire-resistant.

Petroleum-Based Fluids

The most common hydraulic fluids used in hydraulic systems are the petroleum-based oils. These fluids contain additives to protect the fluid from oxidation, to protect the metals from corrosion, to reduce the tendency of the fluid to foam, and to improve the viscosity.

Synthetic Fire-Resistant Fluids

Petroleum-based oils contain most of the desired traits of a hydraulic fluid. However, they are flammable under normal conditions and can become explosive when subjected to high pressures and a source of flame or high temperatures. Nonflammable synthetic liquids have been developed for use in hydraulic systems where fire hazards exist. These synthetic fire-resistant fluids are phosphate ester fire-resistant fluid, silicone synthetic fire-resistant fluid. and the lightweight synthetic fire-resistant fluid.

Water-Based Fire-Resistant Fluids

The most widely used water-based hydraulic fluids may be classified as water-glycol mixtures and water-synthetic base mixtures. The water-glycol mixture contains additives to protect it from oxidation, corrosion, and biological growth and to enhance its load-carrying capacity.

Fire resistance of the water mixture depends on the vaporization and smothering effect of steam generated from the water. The water in water-based fluids is constantly being driven off while the system is operating. Therefore, frequent checks are required to maintain the correct ratio of water to base mixture.

HYDRAULIC SYSTEM COMPONENTS

An arrangement of interconnected components is required to transmit and control power through pressurized fluid. Such an arrangement is commonly referred to as a system. The number and arrangement of the components vary from system to system, depending on application. In many applications, one main system supplies power to several subsystems, which are commonly referred to as circuits. The complete system may be a small compact unit; more often, however, the components are located at widely separated points for convenient control.

The basic components of a fluid power system are essentially the same, regardless of whether the system

uses hydraulic or pneumatic medium. The basic components are as follows:

- Reservoir
- Strainers and filters
- Pumps
- Control valves (directional and relief)
- Actuating devices (cylinders)
- Accumulators
- Motors
- Lines (pipe, tubing, or flexible hose)
- Connectors and fittings
- Sealing materials and devices

Several applications of fluid power require only a simple system; that is, a system which uses only a few components in addition to the basic components.

Reservoir

A properly constructed reservoir (fig. 3-6) is more than just a tank to hold oil until the system demands fluid. Is should also be capable of the following:

1. Dissipating heat from the fluid,
2. Separating air from the oil, and
3. Settling out contamination in the oil.

Ideally, the reservoir should be high and narrow, rather than shallow and broad. The oil level should be as high as possible above the opening to the pump suction line. This condition prevents the vacuum at the line opening from causing a vortex or whirlpool effect. Anytime you see a whirlpool at the suction line opening, the system is taking in air.

As a rule of thumb, the reservoir level should be two to three times the pump output per minute. By this rule which works well for stationary machinery, a 20-gpm system would require a 40- or 60-gpm reservoir. However, this is not possible for mobile equipment. You are more likely to find a 20- or 30-gallon tank to support a 100-gpm system. This is possible because mobile systems operate intermittently, rather than all the time. The largest reservoirs are on mobile equipment. These reservoirs may have a 40- or 50-gallon capacity, capable of handling more than 200-gpm output.

The reservoir must be sized to ensure there is a reserve of oil with all the cylinders in the system fully extended. The reserve must be high enough to prevent a whirlpool at the suction line opening. Also, there

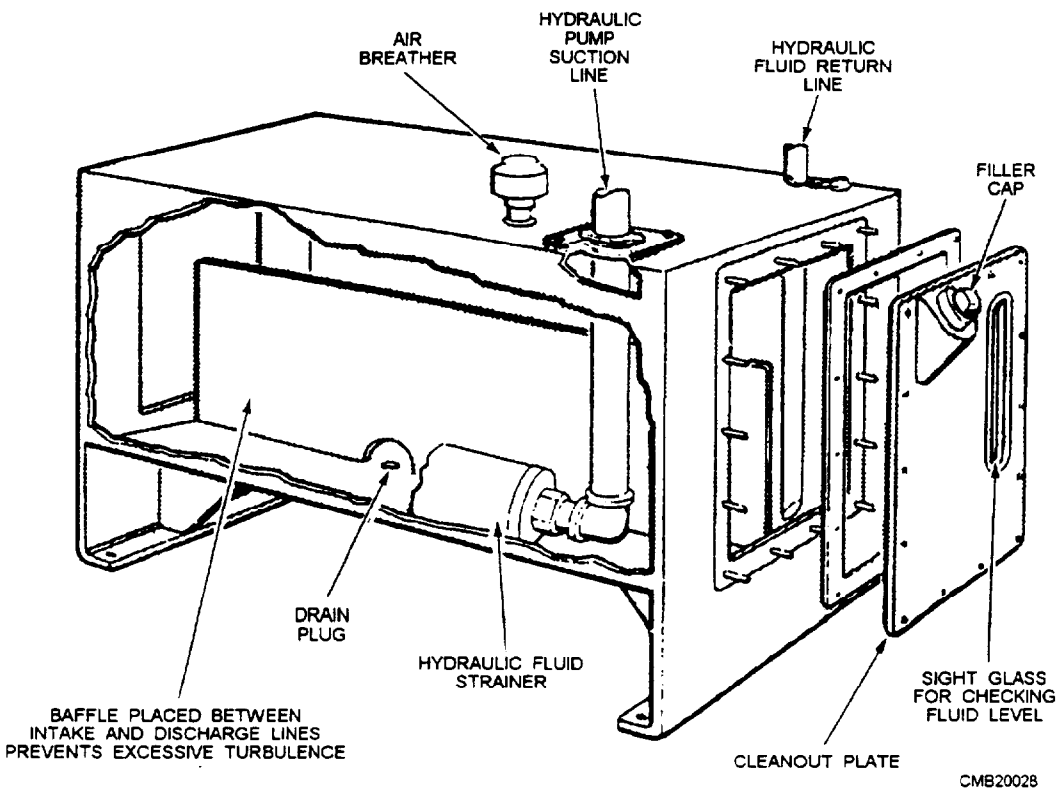

Figure 3-6.—Typical hydraulic reservoir.

must be enough space to hold all the oil when the cylinders retract with some space to spare for expansion of hot oil.

An air vent allows the air to be drawn in and pushed out of the reservoir by the ever-changing fluid level. An air filter is attached to the air vent to prevent drawing atmospheric dust into the system by the ever-changing fluid level. A firmly secured filling strainer of fine mesh wire is always placed below the filler cap.

The sight gauge is provided so the normal fluid level can always be seen, as it is essential that the fluid in the reservoir be at the correct level. The baffle plate segregates the outlet fluid from the inlet fluid. Although not a total segregation, it does allow time to dissipate the air bubbles, lessen the fluid turbulence (contaminants settle out of nonturbulent fluid), and cool the return fluid somewhat before it is picked up by the pump.

Reservoirs used on CESE may vary considerably from that shown in figure 3-6; however, manufacturers retain many of the noted features as possible depending on design limits and use.

Strainers and Filters

Strainers are constructed of fine mesh wire screens or of screening elements, consisting of specially processed wire of varying thickness wrapped around metal frames. They do **NOT** provide as fine a screening action as filters, but they offer less resistance to flow and are used in pump suction lines where pressure drop must be kept to a minimum. If one strainer is not large enough to handle the supply of the pump. two or more strainers can be used in parallel.

The most common device installed in hydraulic systems to prevent foreign particles and contamination from remaining in the system are called filters. They may be located in the reservoir, in the return line, in the pressure line, or any other location in the system where the designer of the system decides they are needed to safeguard the system against impurities.

Filters are classified as full flow and partial flow. In the full-flow filter, all fluid that enters the unit passes through the filtering element, while in the partial-flow filter. only a portion of the fluid passes through the element.

Pumps

The purpose of a hydraulic pump is to supply a flow of fluid to a hydraulic system. The pump does not create system pressure, since only a resistance to the flow can create pressure. As the pump provides flow, it transmits a force to the fluid. As the fluid flow encounters resistance, this force is changed into pressure. Resistance to flow is the result of a resistance or obstruction in the path of flow. This restriction is normally the work accomplished by the hydraulic system, but can also be restrictions of lines, fittings, and valves within the system. Thus the load imposed on the system or action of a pressure-regulating device controls the pressure.

Pumps are rated according to their volumetric output and displacement. Volumetric output is the amount of fluid a pump can deliver to its outlet port in a certain period of time at a given speed. Volumetric output is usually expressed in gallons per minute (gpm). Since changes in pump speed affect volumetric output, some pumps are rated by their displacement. Pump displacement is the amount of fluid the pump can deliver per cycle. Since most pumps use a rotary drive, displacement is usually expressed in terms of cubic inches per revolution.

Many different methods are used to classify pumps. Terms, such as nonpositive displacement, positive displacement, fixed displacement, variable displacement, fixed delivery, variable delivery, constant volume, and others are used to describe pumps. The first two of these terms describe the fundamental division of pumps because all pumps are either nonpositive displacement or positive displacement. Basically pumps that discharge liquid in a continuous flow are referred to as nonpositive displacement, and those that discharge volumes separated by a period of no discharge are referred to as positive displacement.

Pumps may also be classified according to the specific design used to create the flow of fluid. Practically all-hydraulic pumps fall within three designs classifications—centrifugal, rotary, and reciprocating. Since the use of centrifugal pumps is limited, we will only discuss rotary and reciprocating.

ROTARY PUMPS.—All rotary pumps have rotating parts that trap the fluid at the inlet (suction) port and force it through the discharge port into the system. Gears (figs. 3-7, 3-8, and 3-9), screws (fig. 3-10), lobes (fig. 3-11), and vanes (fig. 3-12) are commonly used to move the fluid. Rotary pumps are positive displacement of the fixed displacement type.

Rotary pumps are designed with very small clearances between rotating parts and stationary parts

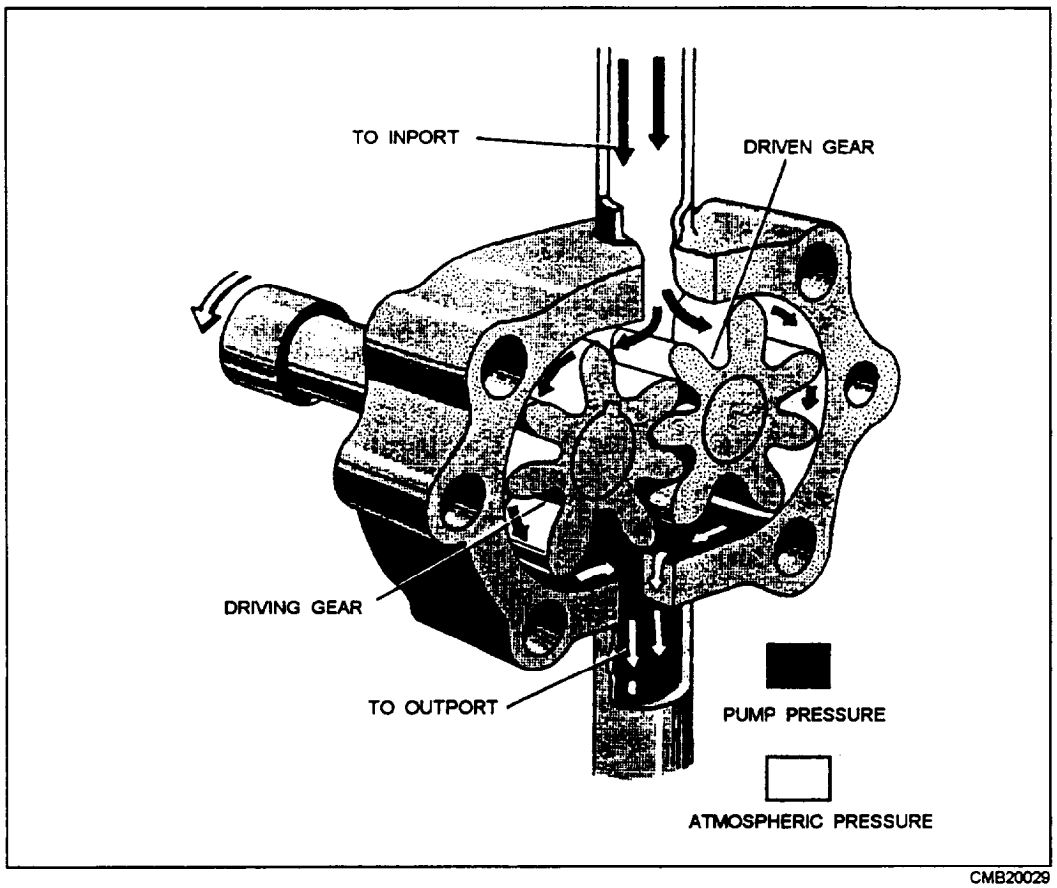

Figure 3-7.—Gear-type rotary pump.

to minimize slippage from the discharge side back to the suction side. They are designed to operate at relatively moderate speeds. Operating at high speeds causes erosion and excessive wear which results in increased clearances.

There are numerous types of rotary pumps and various methods of classification. They may be classified by shaft position—either vertically or horizontally mounted; the type of drive—electric motor, gasoline engine, and so forth; their manufacturer's name; or service application. However, classification of rotary pumps is generally made according to the type of rotating element.

RECIPROCATING PUMPS.—The term *reciprocating* is defined as back-and-forth motion. In a reciprocating pump, it is the back-and-forth motion of pistons inside of cylinders that provides the flow of fluid. Reciprocating pumps, like rotary pumps, operate on the positive principle; that is, each stroke delivers a definite volume of liquid to the system.

The most common type of reciprocating pump is the hand pump (fig. 3-13). There are two types of manually operated reciprocating pumps—single action and double action. The single-action pump provides flow during every other stroke, while the double-action provides flow during each stroke. Single-action pumps are frequently used in hydraulic jacks.

Several types of power-operated hydraulic pumps, such as the radial piston (fig. 3-14) and axial piston (figs. 3-15 and 3-16), are classified as reciprocating pumps. These pumps are sometimes classified as rotary pumps, because a rotary motion is imparted to the pumps by the source of power. However, the actual pumping is performed by sets of pistons reciprocating inside sets of cylinders.

Control Valves

It is all but impossible to design a practical fluid power system without some means of controlling the volume and pressure of the fluid and directing the flow of fluid to the operating units. This is accomplished by incorporating different types of valves. A *valve* is defined as any device by which the flow of fluid may be started, stopped, or regulated by a movable part that opens or obstructs passage.

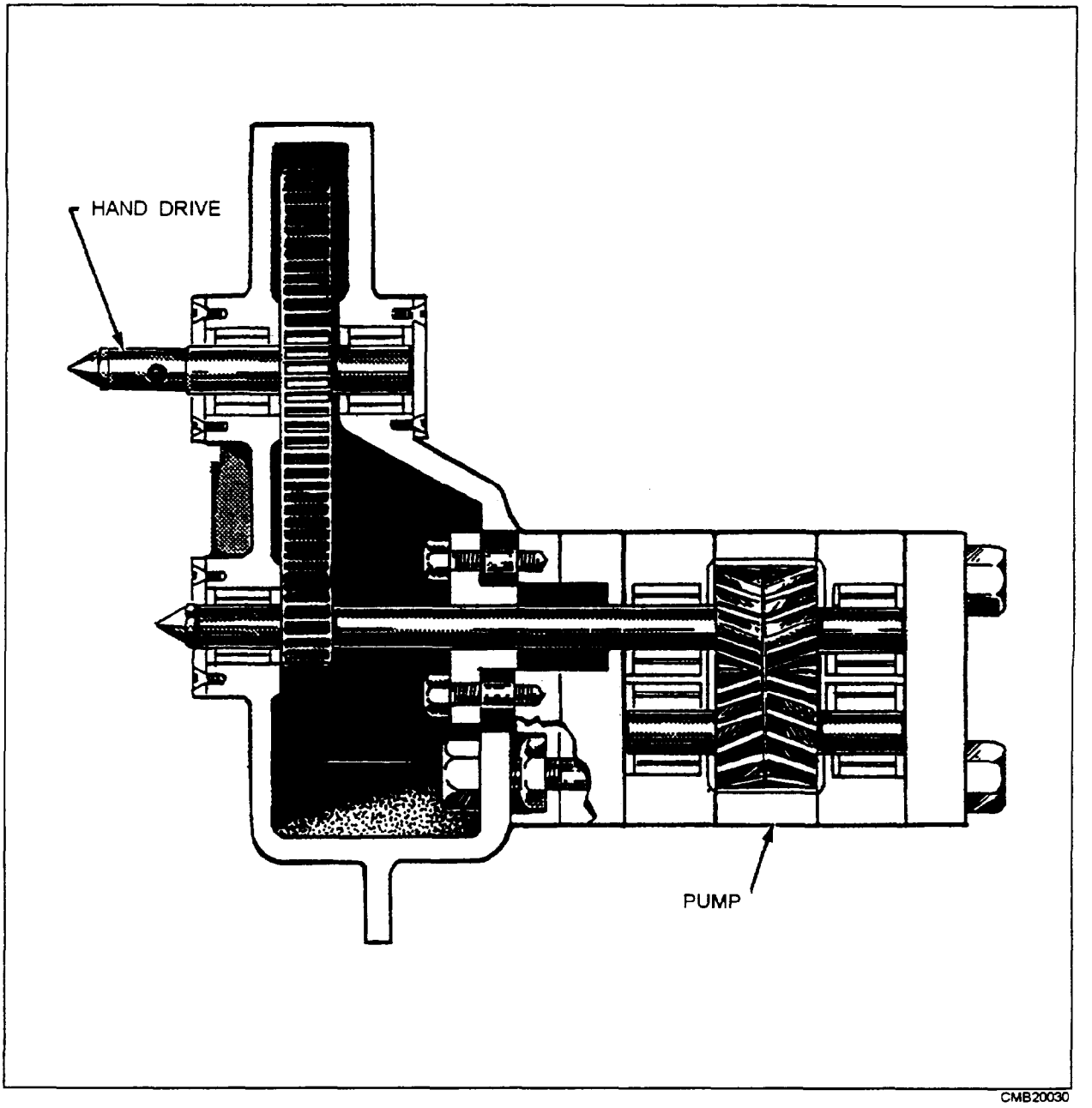

Figure 3-8.—Herringbone gear pump.

Valves must be accurate in the control of fluid flow and pressure and the sequence of operation. Leakage between the valve element and the valve seat is reduced to a negligible quantity by precision-machined surfaces, resulting in carefully controlled clearances. This is one of the very important reasons for minimizing contamination in the system. Contamination causes valves to stick, plugs small orifices, and causes abrasions of the valve seating surfaces which will result in leakage between the valve element and valve seat when the valve is closed. Any of these can result in inefficient operation or complete stoppage of the equipment.

Valves may be controlled manually, electrically, pneumatically, mechanically, hydraulically, or by combinations of two or more methods. Factors that determine the method of control include the purpose of the valve, the design and purpose of the system, the location of the valve within the system, and the availability of the source of power.

Valves are classified according to their use: flow control, pressure control, and directional control. Some of these valves have multiple functions that fall into more than one classification.

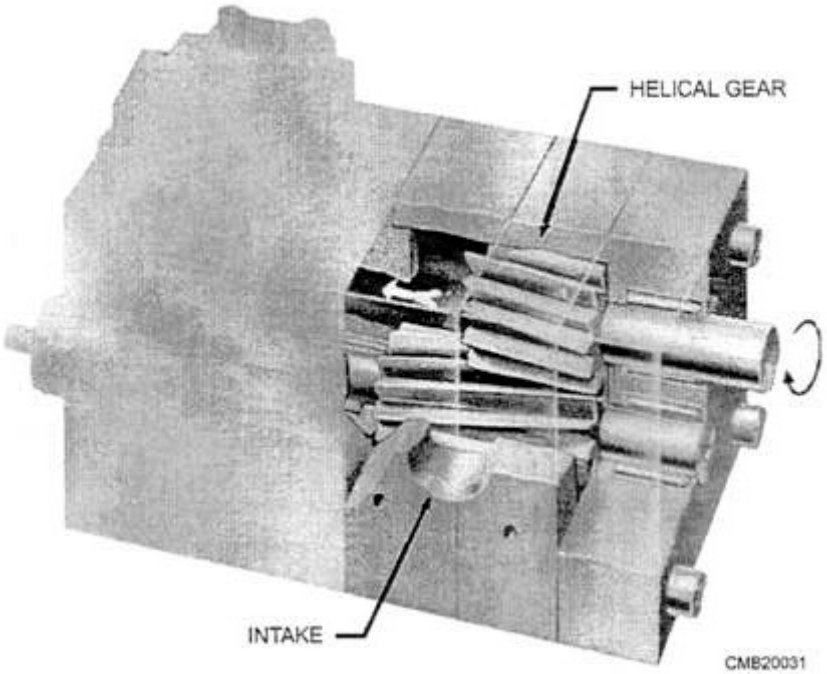

Figure 3-9.—Helical gear pump.

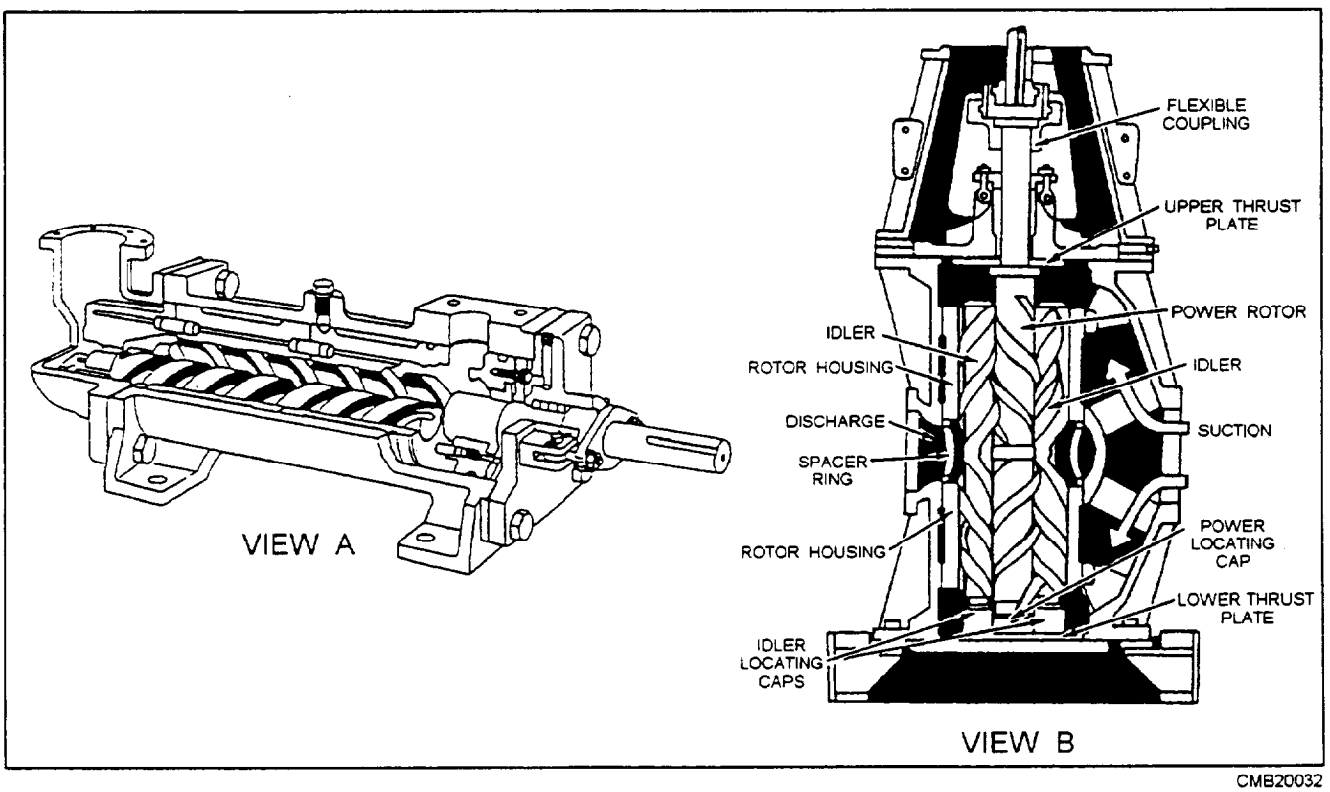

Figure 3-10.—Screw pump.

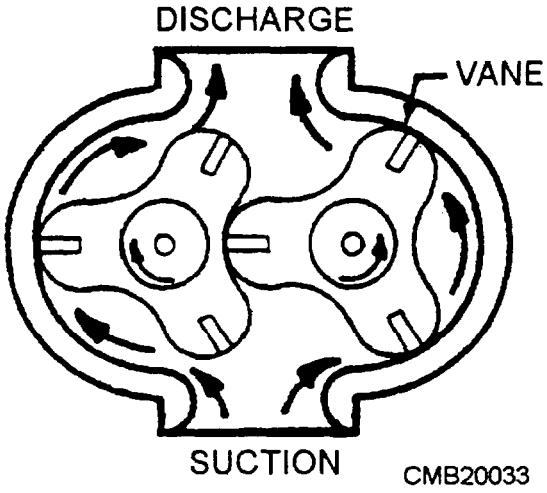

Figure 3-11.—Lobe pump.

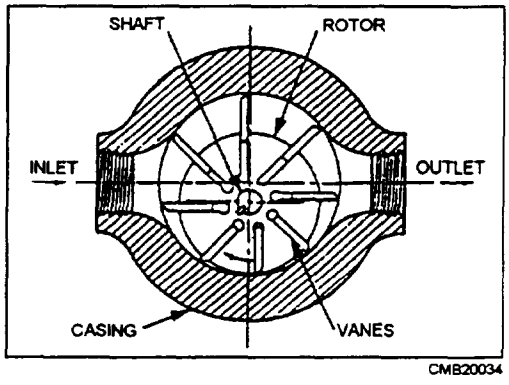

Figure 3-12.—Vane pump.

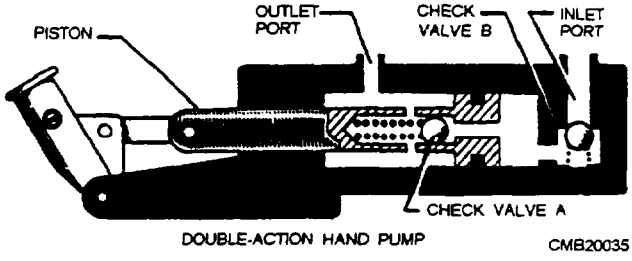

Figure 3-13.—Hydraulic hand pump.

FLOW CONTROL VALVES.—Flow control valves are used to regulate the flow of fluid in a fluid-power system. Control of flow in fluid-power systems is important because the rate of movement of fluid-powered mechanisms depends on the rate of flow of the pressurized fluid. Some of the most commonly used flow control valves are ball valves (fig. 3-17), gate valves (fig. 3-18), globe valves (fig. 3-19), and needle valves (fig. 3-20).

PRESSURE CONTROL VALVES.—The safe and efficient operation of hydraulic systems, systems components, and related equipment requires a means

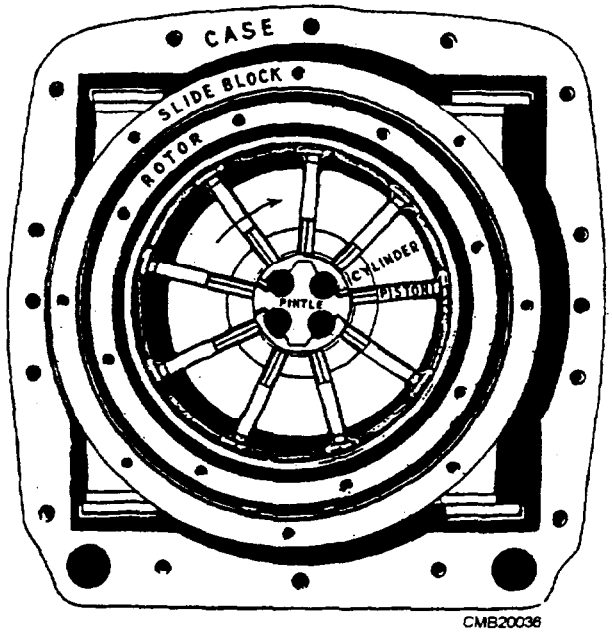

Figure 3-14.—Nine-piston radial piston pump.

of controlling pressure. There are many types of automatic pressure control valves. Some of them merely provide an escape for pressure that exceeds a set pressure, some only reduce the pressure to a lower pressure system or subsystem, and some keep the pressure in a system within a required range. The most common pressure control valves are relief valves (fig. 3-21), pressure regulators (fig. 3-22), pressure-reducing valves (fig. 3-23), and counterbalance valves (fig. 3-24).

DIRECTIONAL CONTROL VALVES.—Directional control valves are designed to direct the flow of fluid, at the desired time, to the point in a fluid power system where it will do work; for example, using a directional control valve to drive a ram back and forth in its cylinder. Various other terms are used to identity directional control valves, such as selector *valve, transfer valve,* and *control valve.*

Directional control valves for hydraulic and pneumatic systems are similar in design and operation. However, there is one major difference. The return port of a hydraulic valve is ported through a return line to the reservoir, while the similar port in a pneumatic valve, commonly referred to as an exhaust port, is usually vented to the atmosphere.

Directional control valves may be operated by differences in pressure acting on opposite sides of the valving element, or they may be positioned manually, mechanically, or electrically. Often two or more methods of operating the same valve will be used in different phases or its action.

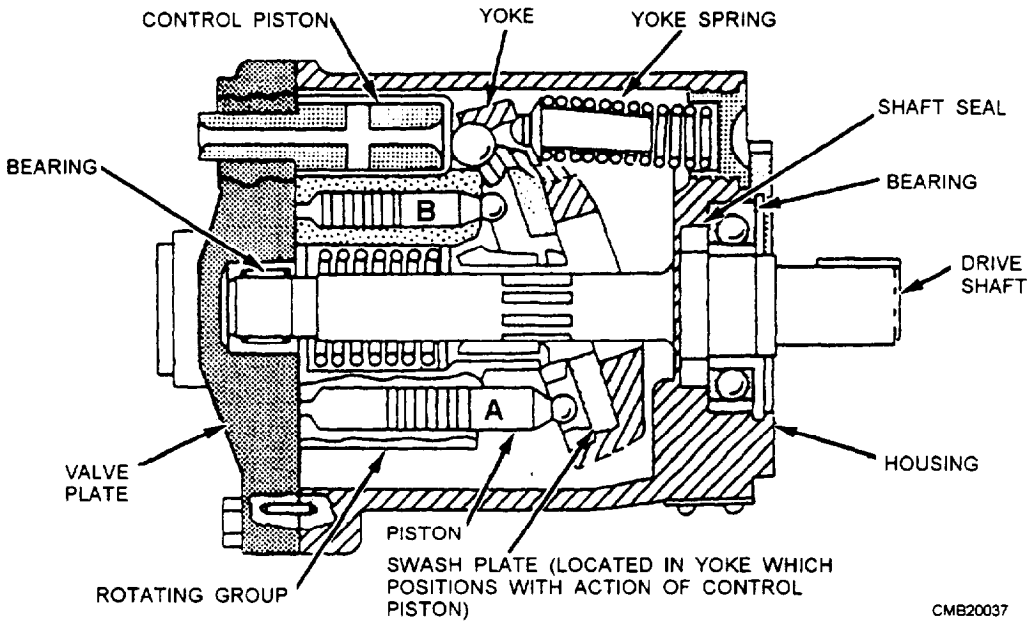

Figure 3-15.—In-line axial piston pump.

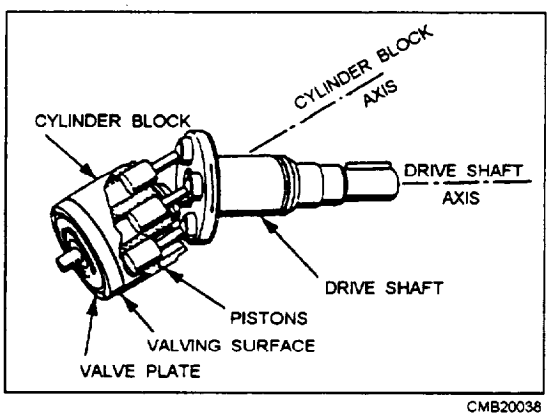

Figure 3-16.—Bent-axis axial piston pump.

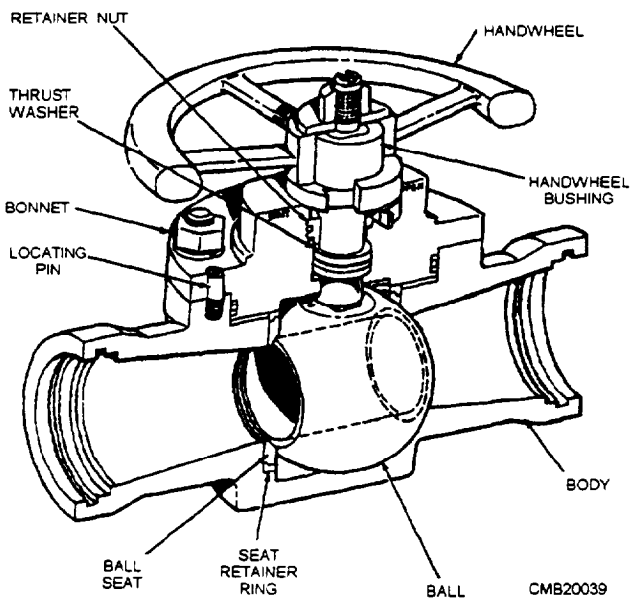

Figure 3-17.—Typical ball valve.

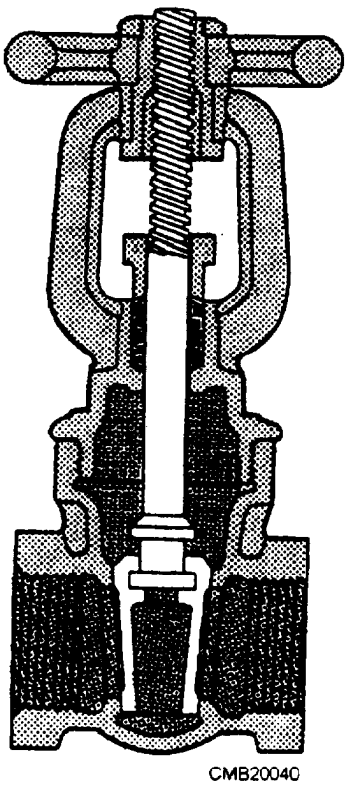

Figure 3-18.—Rising stem gate valve.

Directional control valves may be classified in several ways. Some of the different ways are by the type of control, the number of ports in the valve housing, and the specific function of the valve. The most common method is by the type of valving element used in the construction of the valve. The most common types of valving elements used in a hydraulic

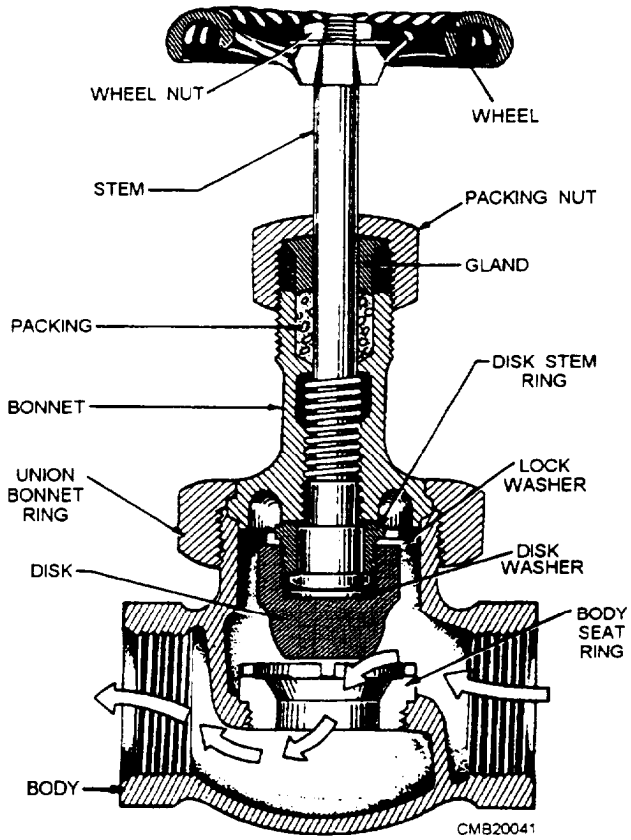

Figure 3-19.—Globe valve.

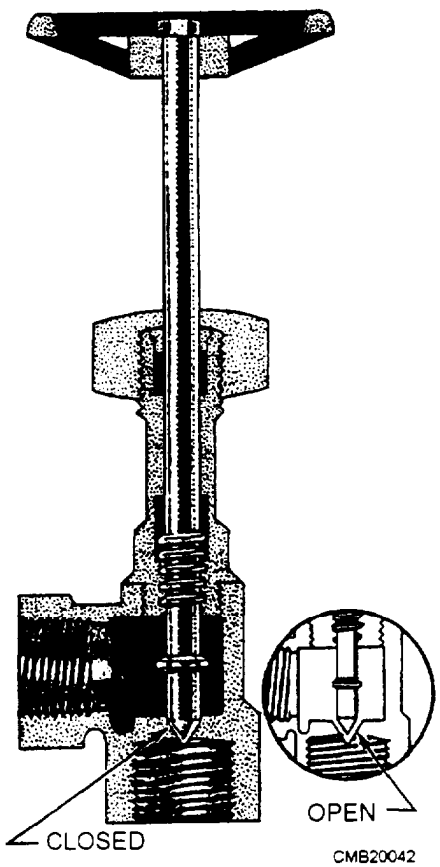

Figure 3-20.—Cross-sectional view of a needle valve.

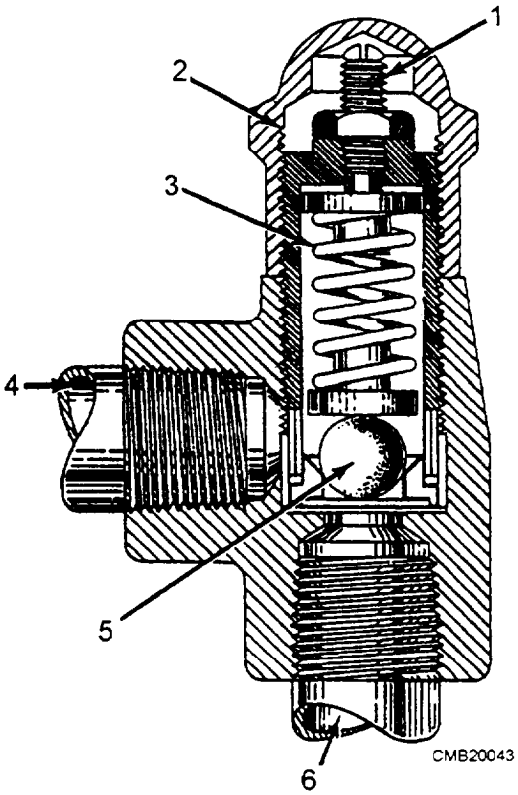

1. Adjusting screw
2. Adjusting screwcap
3. Spring
4. Return port
5. Ball
6. Pressure port

Figure 3-21.—Typical relief valve.

system are the poppet (fig. 3-25), rotary spool (fig. 3-26), and sliding spool valves (fig. 3-27).

Cylinders

An actuating cylinder is a device that converts fluid power to linear motion, or straight-line force and motion. Since linear motion is a back-and-forth motion along a straight line, this type of actuator is sometimes referred to as a reciprocating. The cylinder consists of a ram or piston operating within a cylindrical bore. Actuating cylinders may be installed so that the cylinder is anchored to a stationary structure and the ram or piston is attached to the mechanism to be operated, or the piston or ram may be anchored to the stationary structure and the cylinder attached to the mechanism to be operated.

RAM-TYPE CYLINDERS.—The terms *ram* and *piston* are often used interchangeably. However, a ram-type cylinder is usually considered one in which the cross-sectional area of the piston is more than one halfofthe cross-sectional area of the movable element. In most actuating cylinders of this type, the rod and the

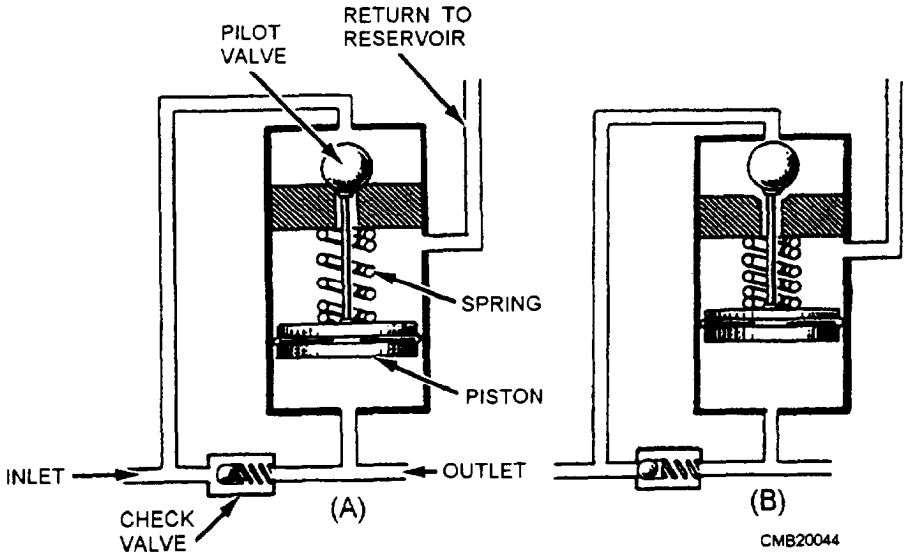

Figure 3-22.—Hydraulic pressure regulator.

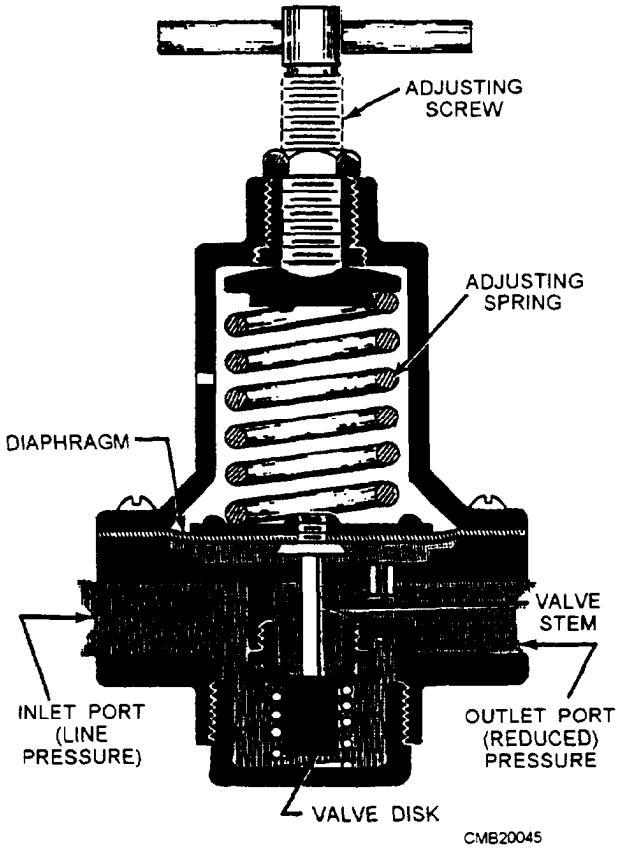

Figure 3-23.—Spring-loaded pressure-reducing valve.

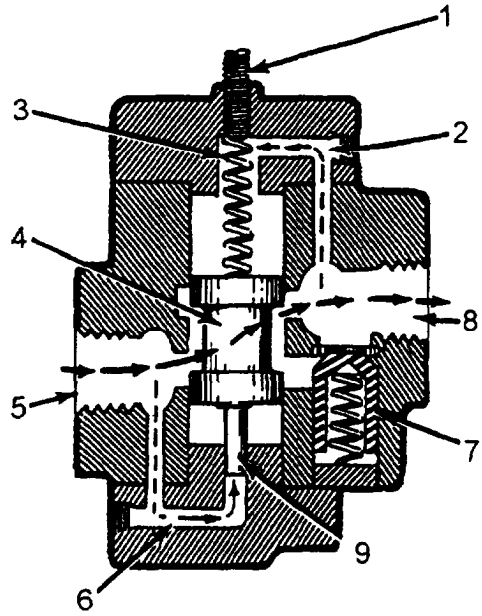

1. Adjustment screw
2. Internal drain
3. Spring
4. Spool
5. Pressure inlet or reverse free flow outlet
6. Pilot passage
7. Check valve
8. Discharge outlet or reverse free flow inlet
9. Piston

CMB20046

Figure 3-24.—Counterbalance valve.

movable element have equal areas. This type of movable element is frequently referred to as a plunger. The most common ram-type cylinders are the single- (fig. 3-28) and double-acting (fig. 3-29).

The ram-type actuator is primarily used to push, rather than pull. Some applications require simply a flat surface on the external part of the ram for pushing or lifting the unit to be operated. Other applications require some mechanical means of attachment, such as a clevis or eyebolt. The design of ram-type cylinders varies in many other respects to satisfy the requirements of different applications.

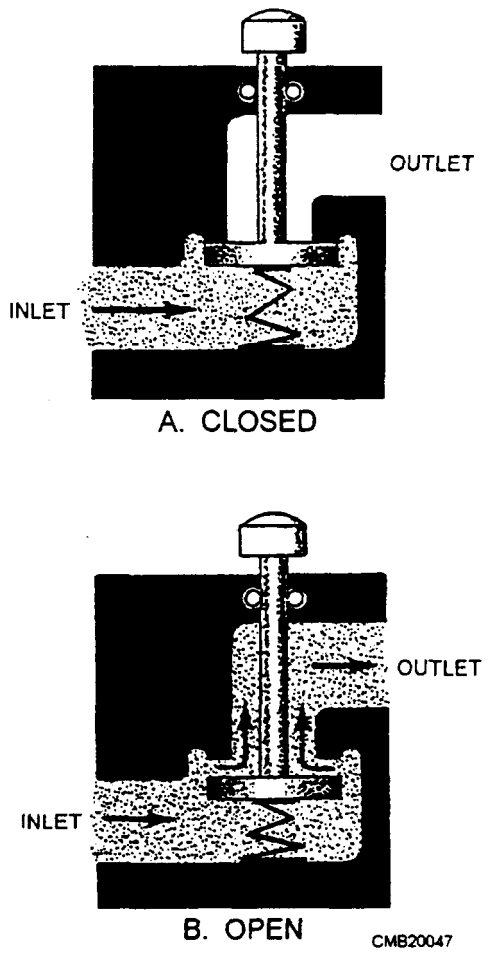

Figure 3-25.—The basic operation of a simple poppet valve.

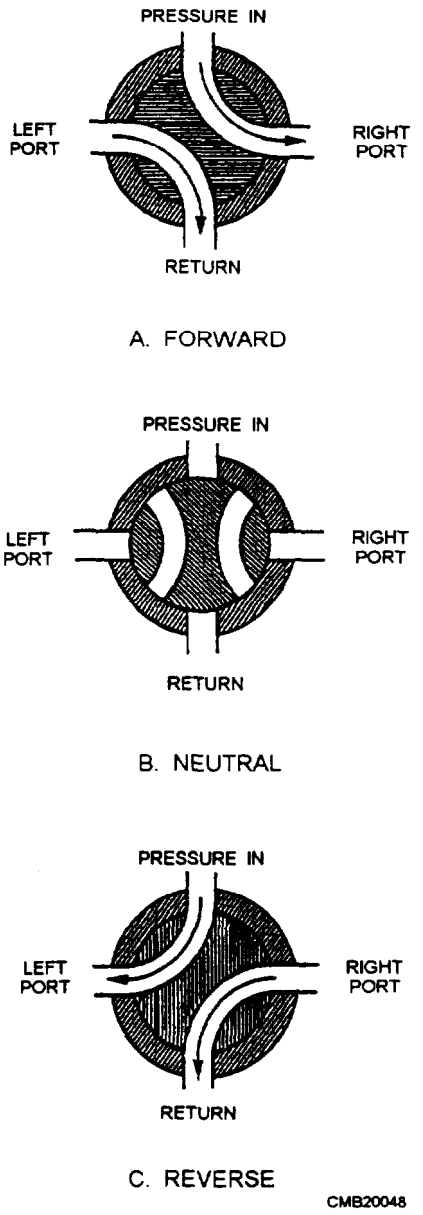

Figure 3-26.—Operation of a rotary spool valve.

PISTON-TYPE CYLINDERS.—An actuating cylinder in which the cross-sectional area of the piston is less than one half of the cross-sectional area of the movable element is referred to as a piston-type cylinder. This type of cylinder is normally used for applications that require both push and pull functions. The piston-type cylinder is the most common type used in fluid power systems.

The essential parts of a piston-type cylinder are a cylindrical barrel, a piston and rod, end caps, and suitable seals. The end caps are attached to the end of the barrel. These end caps usually contain fluid ports. The end cap on the rod end contains a hole for the piston rod to pass through. Suitable seals are used between the hole and the piston rod to keep fluid from leaking out and to keep dirt and other contaminants from entering the barrel. The opposite end cap of most cylinders is provided with a fitting for securing the actuating cylinder to some structure. This end cap is referred to as the anchor end cap.

The piston rod may extend through either or both ends of the cylinder. The extended end of the rod is normally threaded so that some type of mechanical connector, such as an eyebolt or clevis, and locknut can be attached. This threaded connection provides for adjustment between the rod and the unit to be actuated. After the correct adjustment is made, the locknut is tightened against the connector to prevent the connector from turning. The other end of the connector is attached to, either directly or through additional mechanical linkage, the unit to be actuated.

To satisfy the many requirements of fluid power systems, piston-type cylinders are available in various designs with the most common being the single- (fig. 3-30, view A) and double-acting (fig. 3-30, view B).

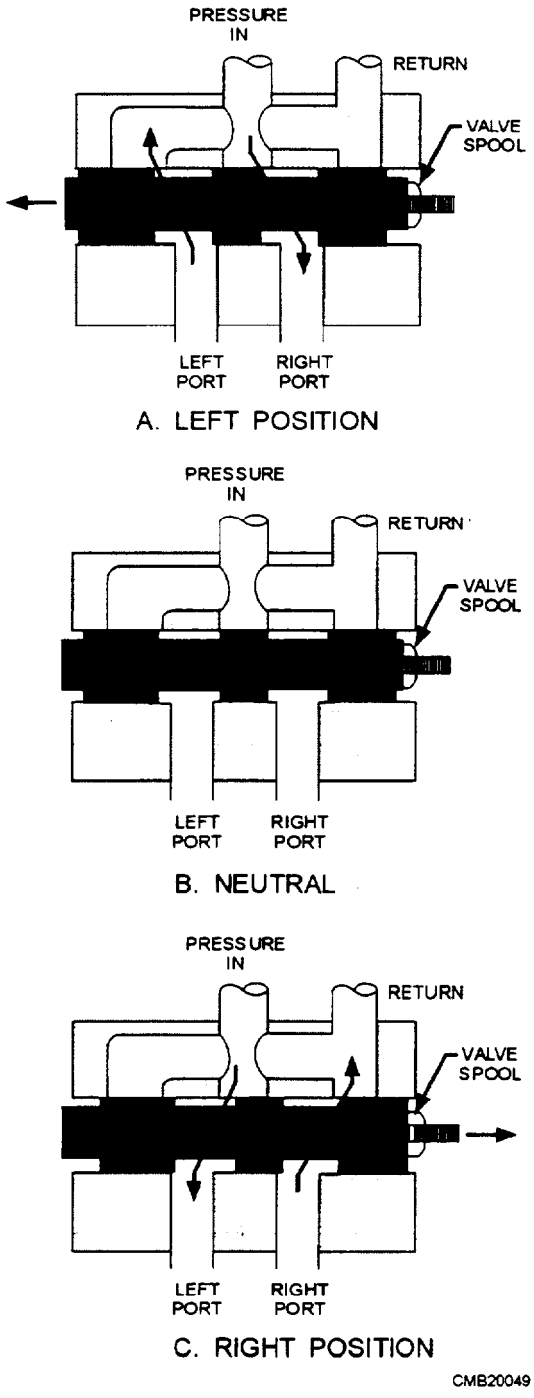

Figure 3-27.—Operation of a sliding spool valve.

Accumulators

An accumulator is a pressure storage reservoir in which hydraulic fluid is stored under pressure from an external source. Accumulators have four major uses:

1. **Store energy.** Accumulators that store energy are often used as boosters for systems with fixed displacement pumps. The accumulator stores pressure

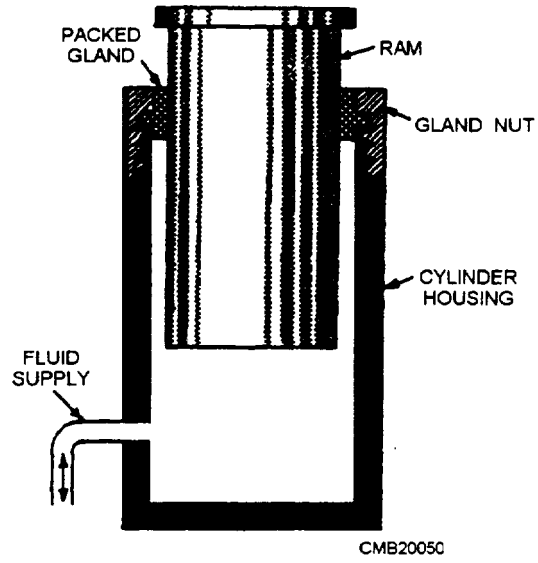

Figure 3-28.—Single-acting ram-type actuating cylinder.

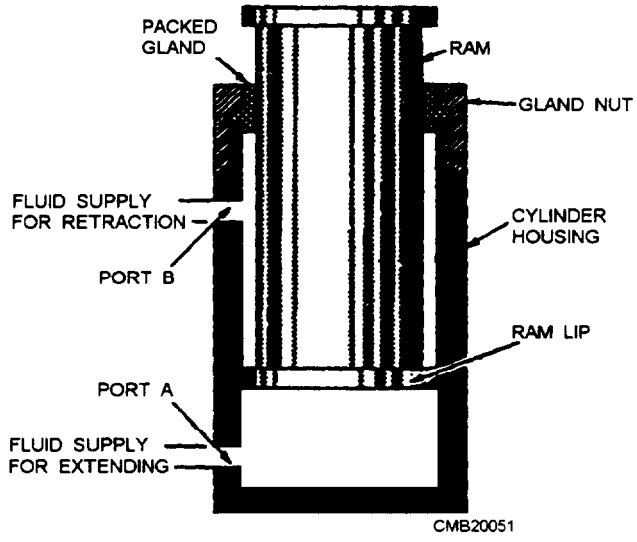

Figure 3-29.—Double-acting ram-type actuating cylinder.

oil during slack periods and feeds it back into the system during peak periods of oil usage.

2. **Absorb shocks.** Accumulators that absorb shocks take in excess oil during peak pressures and let it out again after the surge is past. This action reduces vibrations and noise in the system. It also smoothes operation during pressure delays, such as when a variable displacement pump goes into stroke.

3. **Build pressure gradually.** Accumulators that build pressure gradually are used to soften the working stroke of a piston against a fixed load as in a hydraulic press.

4. **Maintain constant pressure.** Accumulators that maintain constant pressure are always weight-loaded types that place a fixed force on the oil in a closed

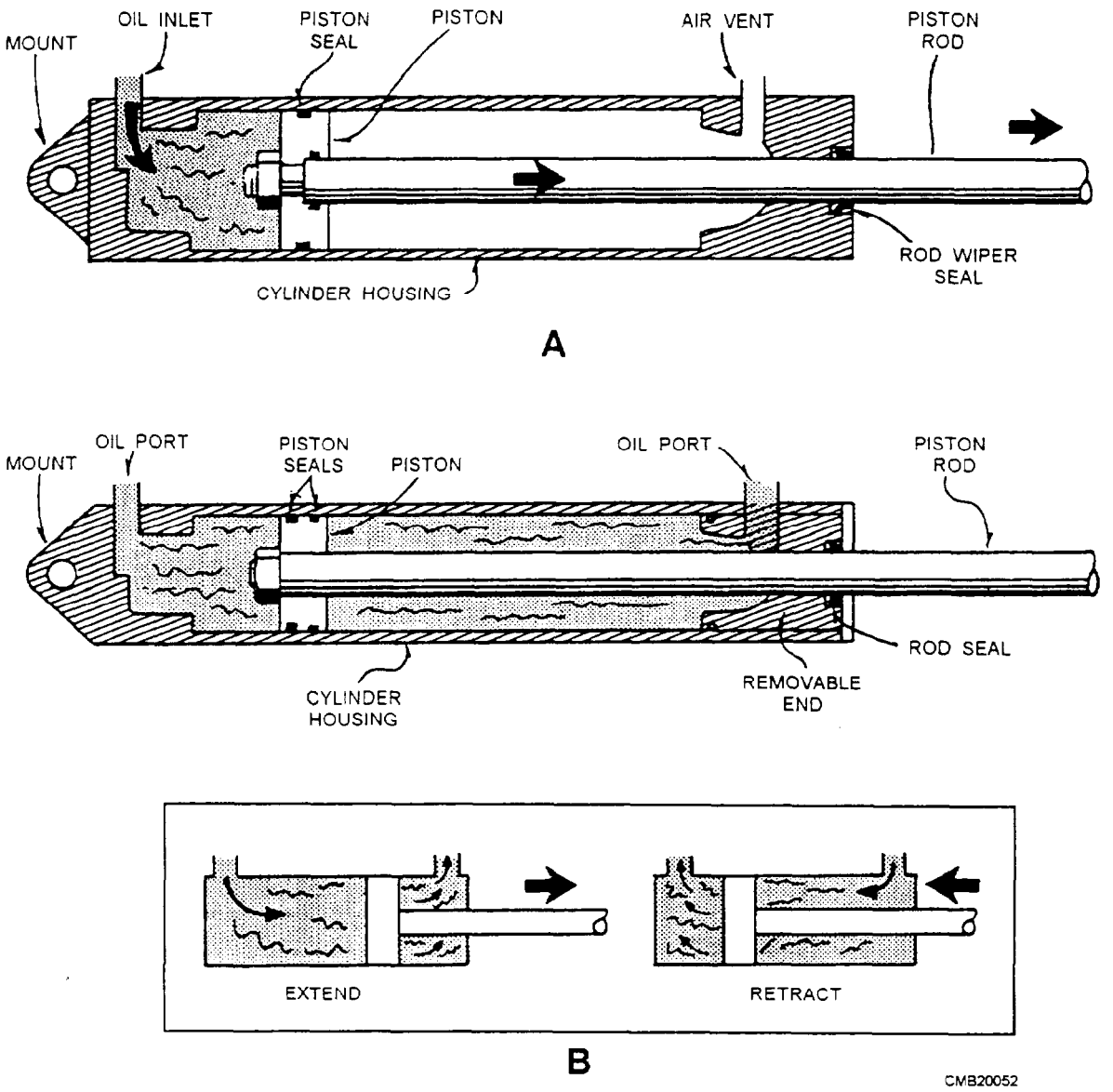

Figure 3-30.—(A) Single- and (B) double-acting piston-type cylinders.

4. **Maintain constant pressure.** Accumulators that maintain constant pressure are always weight-loaded types that place a fixed force on the oil in a closed circuit. Whether the volume of oil changes from leakage or from heat expansion or contraction, this accumulator keeps the same gravity pressure on the system.

While most accumulators can do any of these things, their use in a system is limited to only one. The major types of accumulators are as follows: pneumatic (gas-loaded), weight-loaded, spring-loaded.

PNEUMATIC ACCUMULATORS.—In the pneumatic accumulators. gas and oil occupy the same container. When the oil pressure rises, incoming oil compresses the gas. When oil pressure drops, the gas expands, forcing oil out.

In most cases, the gas is separated from the oil by a piston (fig. 3-31), a bladder (fig. 3-32), or a diaphragm (fig. 3-33). This prevents mixing of gas and oil, keeping gas out of the hydraulic system.

WEIGHT-LOADED ACCUMULATORS.—The weight-loaded accumulator uses a piston and cylinder along with heavy weights on the piston for loading or charging the oil. It is loaded by gravity and operation is very basic. The pressure oil in the hydraulic circuit is pushed into the lower section of the cylinder, raising the piston and weights. The accumulator is now charged and ready for work. When oil is needed, pressure drops in the system and gravity

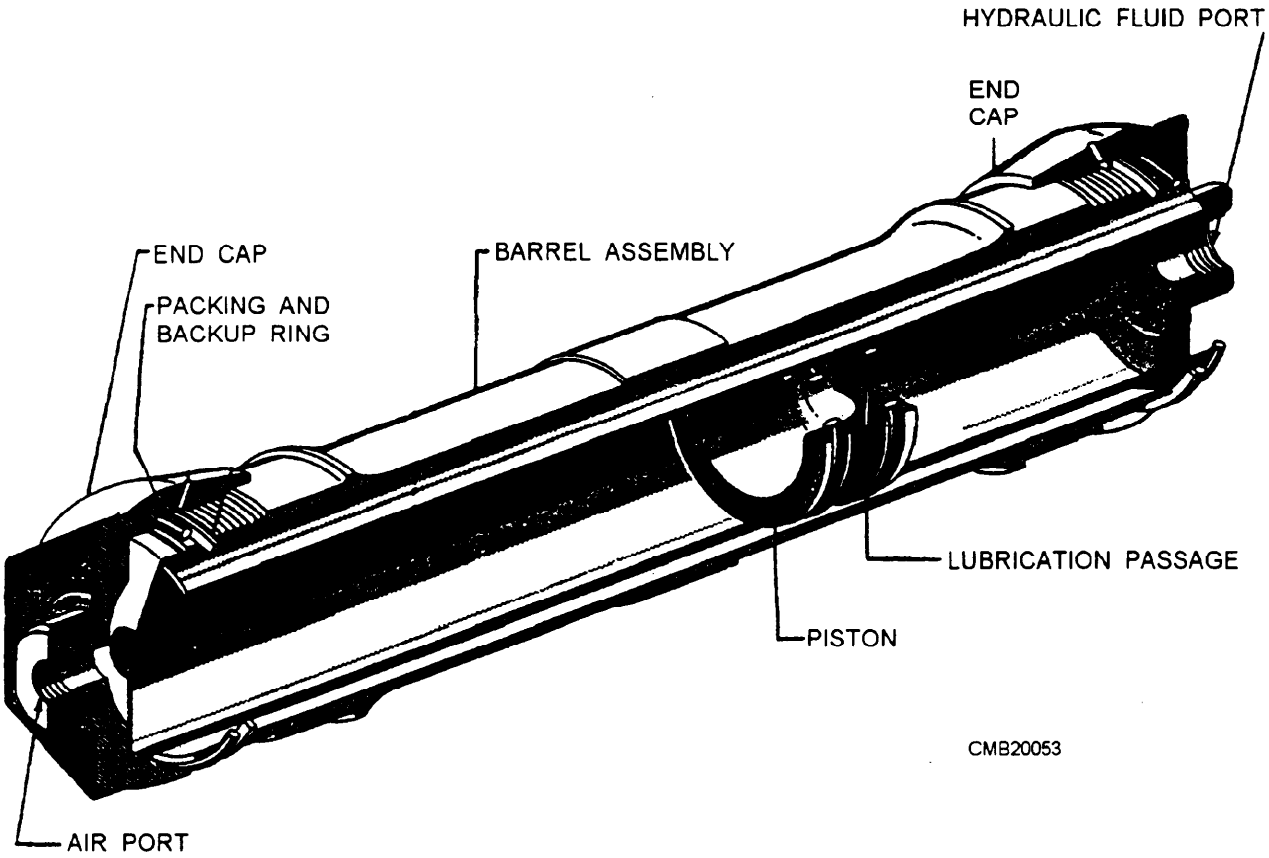

Figure 3-31.—Floating piston-type accumulator.

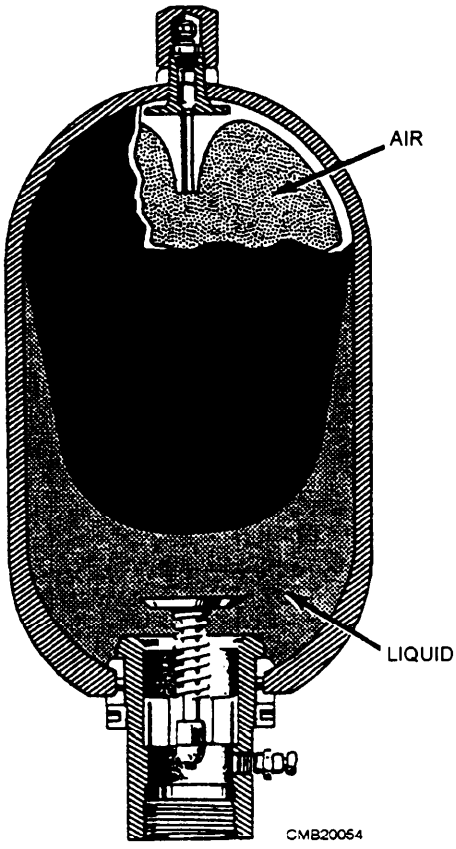

Figure 3-32.—Bladder-type accumulator.

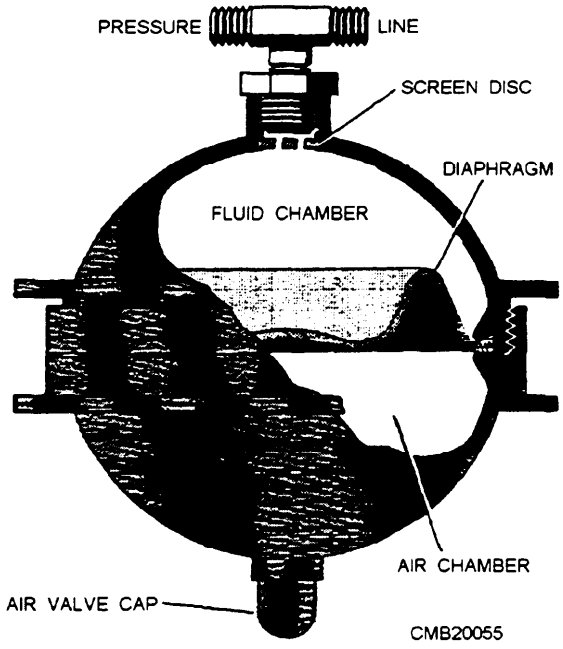

Figure 3-33.—Diaphragm accumulator.

disadvantage is its bulky size and heavy weight which renders it not practical for mobile equipment.

SPRING-LOADED ACCUMULATORS.—The spring-loaded accumulator (fig. 3-34) is very

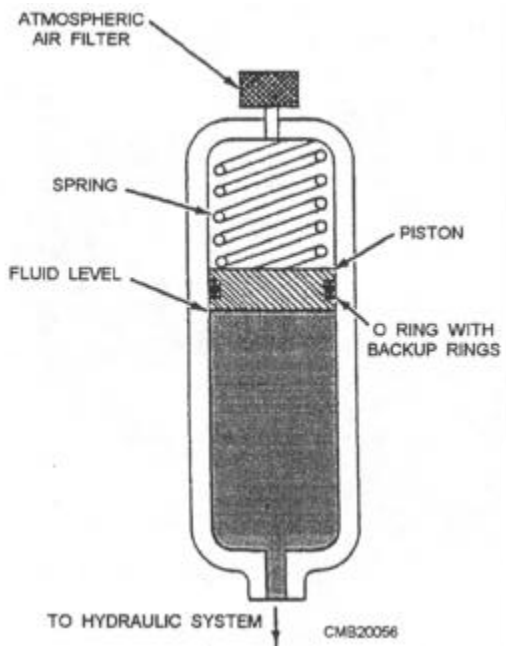

Figure 3-34.—Spring-loaded accumulator.

similar to the weight-loaded accumulator except that springs do the loading. In operation, pressure oil loads the piston by compressing the spring. When pressure drops, the spring forces oil into the system.

Motors

A hydraulic motor is a device that converts fluid power energy to rotary motion and force. The function of a motor is opposite that of a pump. However, the design and operation of motors are very similar to pumps.

Motors have many uses in fluid power systems. In hydraulic power drives, pumps and motors are combined with suitable lines and valves to form hydraulic transmissions.

Fluid motors may either be fixed- or variable-displacement. Fixed-displacement motors provide constant torque and variable speed. Controlling the amount of input flow varies the speed. Variable-displacement motors are constructed so that the working relationship of the internal parts can be varied to change displacement. The majority of the motors used in fluid power systems are the fixed-displacement type.

Fluid motors are usually classified according to the type of internal element that is directly actuated by the flow. The most common element are the gear (fig. 3-7), the vane (fig. 3-12), and the piston (fig. 3-15).

Tubing, Piping, and Hose

The three types of lines used in fluid power systems are tubing (semirigid), pipe (rigid), and hose (flexible). A number of factors are considered when the type of line is selected for a particular system. These factors include the type of fluid, the required system pressure, and the location of the system. For example, heavy pipe might be used for a large stationary system, but comparatively lightweight steel tubing is used in the automotive brake system. Flexible hose is requires in installations where units must be free to move relative to each other.

PIPING AND TUBING.—The choice between pipe and tubing depends on system pressure and flow. The advantages of tubing include easier bending and flaring, fewer fittings, better appearance, better reusability, and less leakage. However, pipe is cheaper and will handle large volumes under high pressures. Pipe is also used where straight-line hookups are required and for more permanent installations.

In either case, the hydraulic lines must be compatible with the entire system. Pressure loss in the line must be kept to a minimum for an efficient system.

Pipes for hydraulic systems should be made of seamless cold-drawn mild steel. Galvanized pipe should **NOT** be used because the zinc coating could flake or scale, causing damage to the valves and pumps.

Tubing used in fluid power systems is commonly made from steel, copper, aluminum, and, in some instances, plastic. Each of these materials has its own distinct advantages or disadvantages in certain applications.

Copper.—The use of copper is limited to low-pressure hydraulic systems where vibration is limited. Copper has high resistance to corrosion and is easily drawn or bent. However, it is unsatisfactory for high temperatures and has a tendency to harden and break due to stress and vibration.

Steel.—Tubing constructed of cold-drawn steel is the accepted standard in hydraulics where high pressures are encountered. Steel is used because of its strength, stability for bending and flanging, and adaptability to high pressures and temperatures. Its chief disadvantage is its comparatively low resistance to corrosion. There are two types of steel tubing—seamless and electric welded.

Aluminum.—Aluminum is limited to low-pressure use, yet it has good flaring and bending characteristics.

Plastic.—Plastic tubing lines are made from a variety of materials; nylon is the most suitable for use in low-pressure hydraulic applications **ONLY.**

There are three important dimensions of any tubular **product—outside diameter (OD), inside diameter (ID),** and **wall thickness.** Sizes of pipe are listed by the nominal (or approximate) ID and wall thickness. Sizes of tubing are listed by the actual OD and the wall thickness.

The material, the inside diameter, and the wall thickness are the three primary considerations in the selection of lines for the circulatory system of a particular fluid power system.

The manufacturers of tubing and pipe usually supply charts, graphs, or tables which aid in the selection of proper lines for fluid power systems. These tables and charts use different methods for deriving the correct sizes of pipe and tubing.

Line should normally be kept as short and free of bends as possible. However, tubing should **NOT** be assembled in a straight line, because a bend tends to eliminate strain by absorbing vibration and compensates for thermal expansion and contraction. Bends are preferred to elbows, because bends cause less of a power loss. A few of the incorrect and correct methods of installing tubing are shown in figure 3-35.

FLEXIBLE HOSE.—Hose is used in fluid power systems where there is a need for flexibility, such as connection to units that move while in operation or to units attached to a hinged portion of the equipment. It is also used in locations that are subjected to severe vibration. Flexible hose is usually used to connect the pump to the system. The vibration that is set up by the operating pump would ultimately cause rigid tubing to fail.

Flexible hose is designated by a dash number, which is the ID of the hose expressed in 16ths of an inch and is stenciled on the side of the hose. For example, the inside of a -16 hose is 1 inch. For a few hose styles, this is approximate and is not a true ID.

Rubber hose is designed for specific fluid, temperature, and pressure ranges and is provided in various specifications. Flexible hydraulic hose is composed of three basic parts (fig. 3-36):

Inner Tube.—The inner tube is a synthetic rubber layer that is oil-resistant. It must be smooth, flexible, and able to resist heat and corrosion.

Reinforcement Layers.—The reinforcement layers vary with the type of hose. These layers (or plies) are constructed of natural or synthetic fibers, braided wire, or a combination of these. The strength of this layer depends upon the pressure requirement of the system.

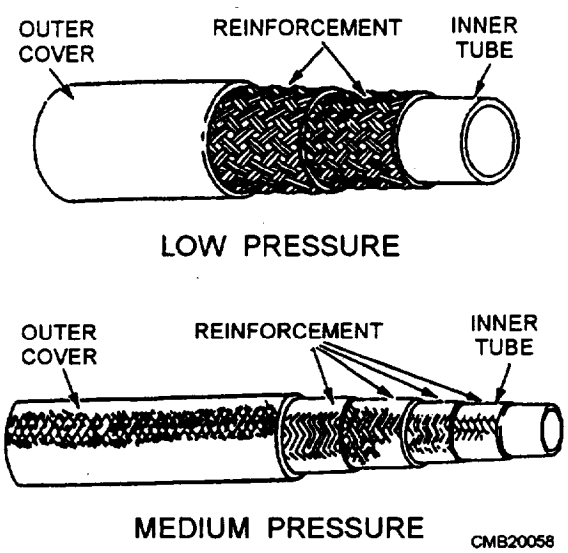

Figure 3-36.—Flexible rubber hose construction.

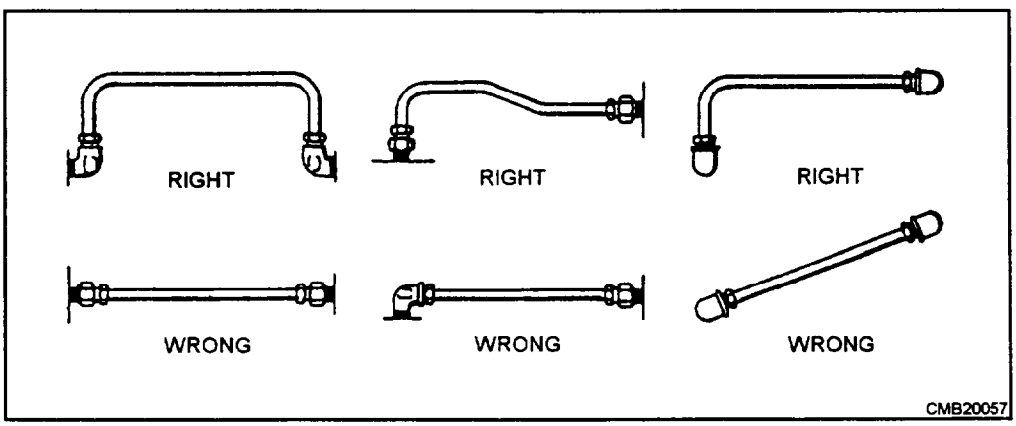

Figure 3-35.—Correct and incorrect methods of installing tubing.

Outer Cover.—The outer cover protects the reinforcement layers. A special rubber is most commonly used for the outer layer because it resists abrasion and exposure to weather, oil, and dirt.

Flexible hose is provided in four-pressure ranges. Low pressure is used in a low-pressure system and for the exhaust lines of high-pressure systems. Medium-pressure hose is used in systems with pressures up to 1,200 psi; high-pressure hose is used with pressures up to 3,000 psi; and extra-high-pressure hose is used in systems with pressures up to 5,000 psi. High- and extra-high-pressure hoses normally come as complete assemblies with factory installed end fittings. Medium- and low-pressure hose are available in bulk and are usually fabricated locally.

Flexible hose must **NOT** be twisted on installation, since this reduces the life of the hose considerably and may cause fittings to loosen as well. You can determine whether or not a hose is twisted by looking at the lay line that runs along the length of the hose. This lay line should not tend to spiral around the hose (fig. 3-37).

Hose should be installed so that it will be subjected to a minimum of flexing during operation. Support clamps are not necessary with short installations, but with hoses of considerable length (48 inches for example), clamps should be placed not more than 24 inches apart. Closer supports are desirable and, in some cases, needed.

Hose must **NEVER** be stretched tight between two fittings. About 5 to 8 percent of the total length must be allowed as slack to provide freedom of movement under pressure. When flexible hose is under pressure, it contracts in length and expands in diameter. Examples of correct and incorrect installations of flexible hose are shown in figure 3-37.

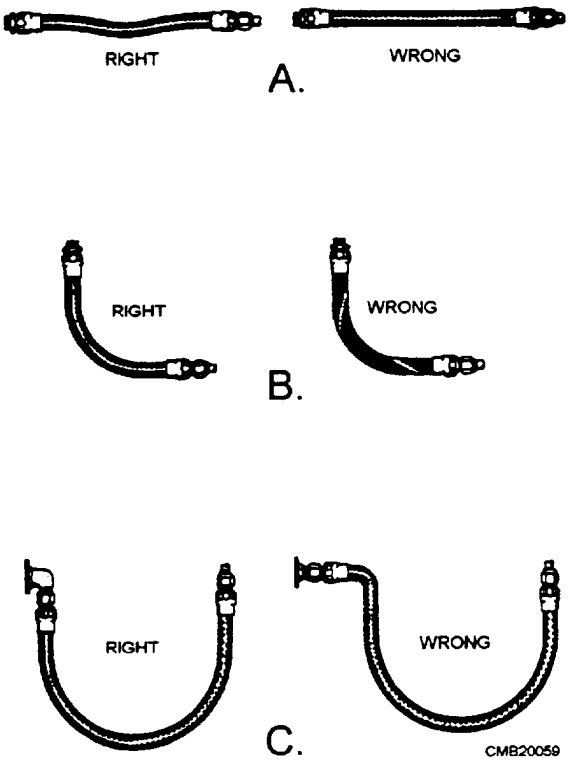

Figure 3-37.—Correct and incorrect installation of flexible hose.

Connectors and Fittings

There are many types of connectors and fittings required for a fluid power system. The type of connector or fitting depends upon the type of circulatory system (pipe, tubing, or flexible hose), the fluid medium, and the maximum operating pressure of the system. Some of the most common connectors and fittings are described in the following paragraphs.

THREADED CONNECTORS.—Threaded connectors (fig. 3-38) are used in low-pressure pipe systems. The connectors are made with standard pipe threads cut on the inside surface of the connector. The end of the pipe is threaded on the outside for connecting with the connector. Standard pipe threads are tapered slightly to ensure a tight connection.

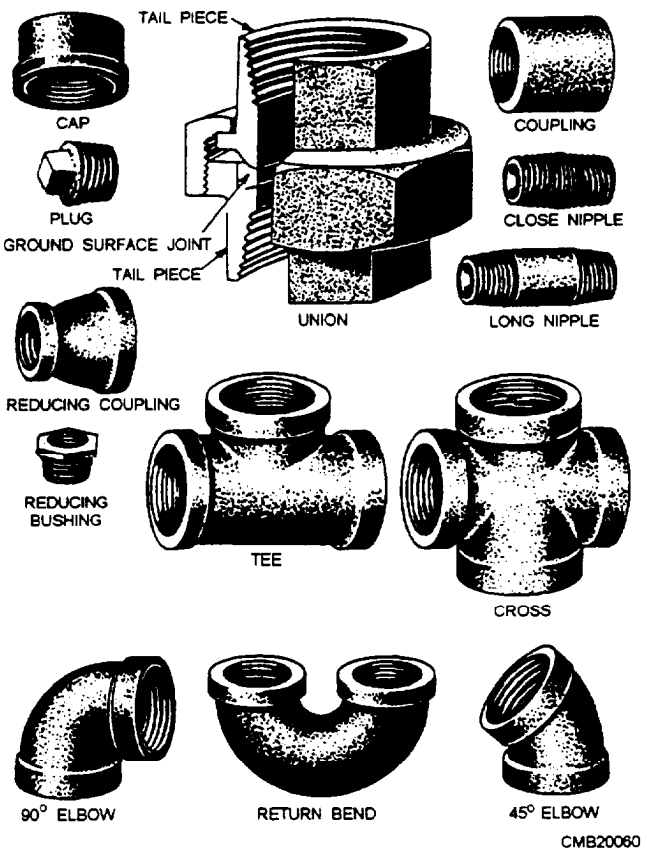

Figure 3-38.—Threaded pipe connectors.

To prevent seizing, you can apply a suitable pipe thread compound to the threads. When a compound is applied to the threads, the two end threads are to be kept free of the compound so that it will not contaminate the fluid. Pipe compound, when improperly applied, may get inside lines and harm pumps and control equipment. Because of this reason many manufacturers forbid the use of such compounds when fabricating the piping for a system.

Another material used on pipe thread is sealant tape, made by TEFLON™. This tape is made of polytetraflouroethylene (PTFE), which provides an effective means of sealing pipe connections and eliminates the need of having to torque connections to excessively high values to prevent leakage. It also provides for ease in maintenance whenever it is necessary to disconnect pipe joints.

FLARED-TUBE CONNECTORS.—Flared-tube connectors are commonly used in circulatory systems consisting of lines made of tubing. These connectors provide safe, strong, dependable connections without the necessity of threading, welding, or soldering the tubing. The connector consists of a fitting, a sleeve, and a nut (fig. 3-39).

The fittings are made of steel, aluminum alloy, or bronze. The fitting used in a connection should be made of the same material as that of the sleeve, the nut, and the tubing. For example, use steel connectors with steel tubing and aluminum alloy connectors with aluminum alloy tubing. Fittings are made in union, 45-degree and 90-degree elbows, tees and various other shapes (fig. 3-40).

Tubing used with flare connectors must be flared before assembly. The nut fits over the sleeve, and when tightened, draw the sleeve and tubing flare tightly against the male fitting to form a seal.

The male fitting has a cone-shaped surface with the same angle as the inside of the flare. The sleeve supports the tube so vibration does not concentrate at the edge of the flare and distributes the shearing action over a wider area for added strength. Correct and incorrect methods of installing flared-tube connectors are shown in figure 3-41. Tubing nuts should be tightened with a torque wrench to the value specified in applicable technical manuals.

FLARELESS-TUBE CONNECTORS.—The flareless-tube connector eliminates all tube flaring, yet provides a safe, strong, and dependable tube connection. This connector consists of a fitting, a sleeve or ferrule, and a nut (fig. 3-42).

Flareless-tube connectors are available in many of the same shapes and threaded combinations as flared-tube connectors (fig. 3-40). The fitting has a counterbore shoulder for the end of the tubing to rest against. The angle of the counterbore causes the cutting edge of the sleeve or ferrule to cut into the outside surface of the tube when the two are assembled.

The nut presses on the bevel of the sleeve and causes it to clamp tightly to the tube. Resistance to vibration is concentrated at this point, rather than at the sleeve cut. When fully tightened, the sleeve or ferrule is bowed

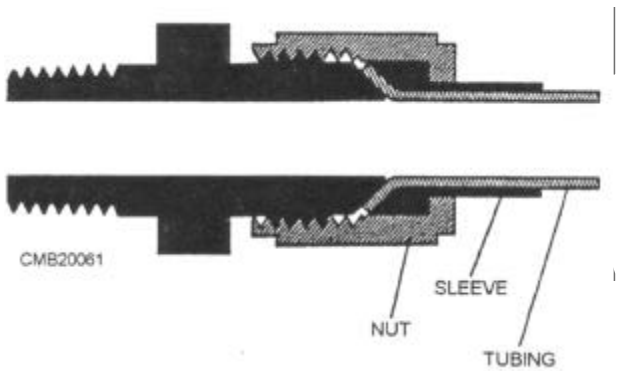

Figure 3-39.—Flared-tube connector.

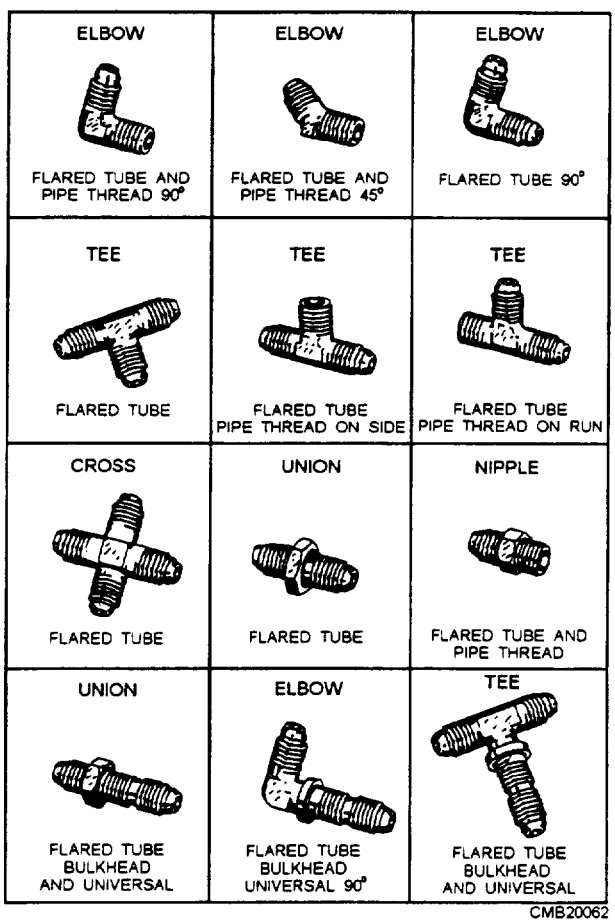

Figure 3-40.—Flared-tube fittings.

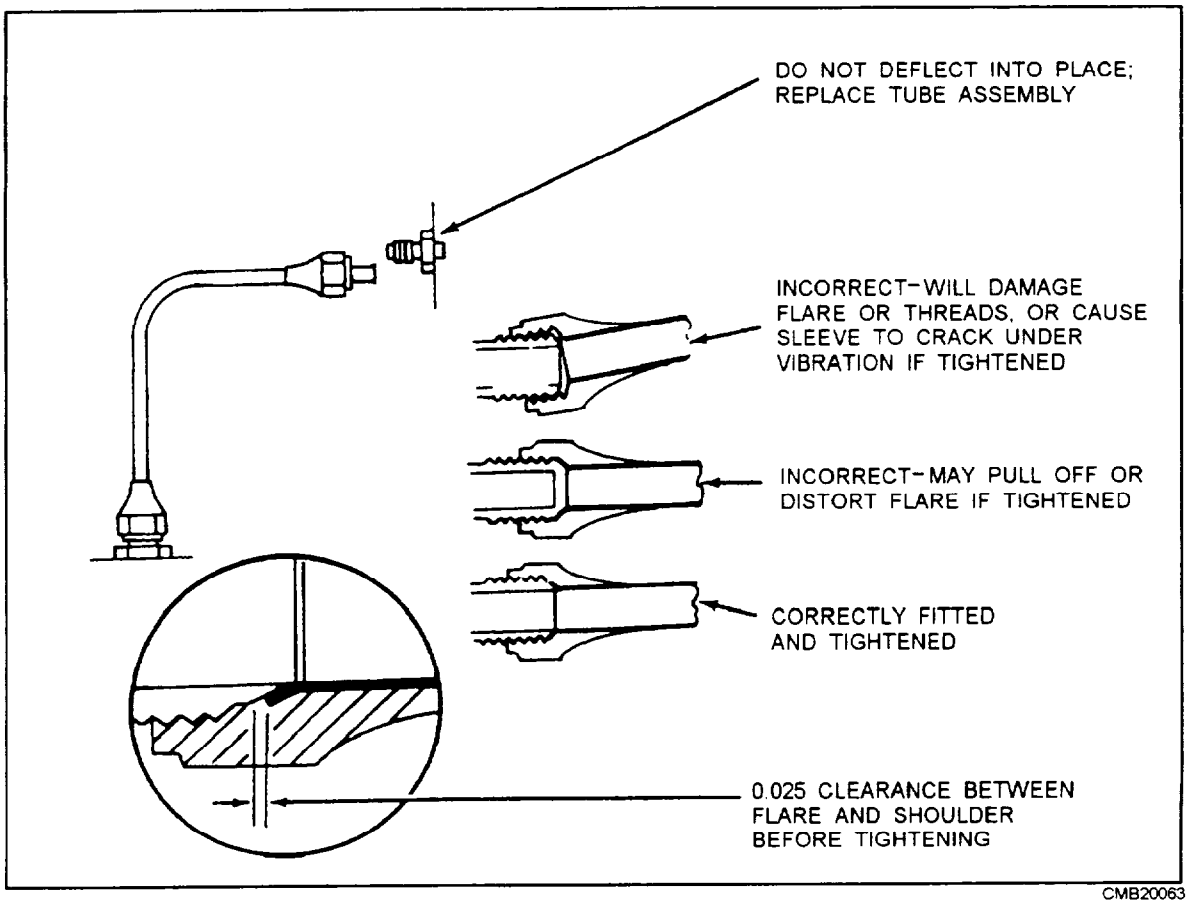

Figure 3-41.—Correct and incorrect methods of installing flared fittings.

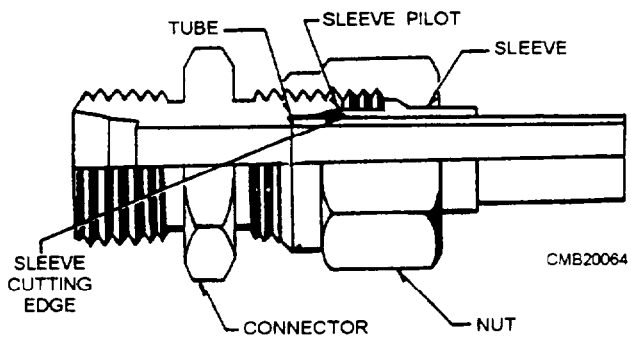

Figure 3-42.—Flareless-tube connector.

slightly at the midsection and acts as a spring. This action of the sleeve or ferrule maintains a constant tension between the body and the nut, thereby preventing the nut from loosening.

Before the installation of a new flareless-tube connector, the end of the tubing must be square, concentric, and free from burrs. For the connection to be effective, the cutting edge of the sleeve or ferrule must bite into the external surface of the tube.

NOTE

When tube-type fittings are being tightened, observe the following:

Tighten only until snug. **NEVER** overtighten. More damage has been done to tube fittings by overtightening than from any other cause.

If a fitting starts to leak and appears loose, retighten only until leak stops.

Where necessary, use two wrenches on fittings to avoid twisting the lines.

FLEXIBLE HOSE CONNECTORS.—Flexible hose connectors are designed to be either permanent or reusable and are made of forged steel. There are various types of end fittings for both the piping connection side and the hose connection side of hose fittings (fig. 3-43).

Permanent hose fittings are discarded with the hose when the hose is damaged or defective. They are either crimped or swedged onto the hose. A crimping machine that may be found in most shops does crimping of the fitting. The crimping machine is either powered by hand. an air pump, or a hydraulic pump.

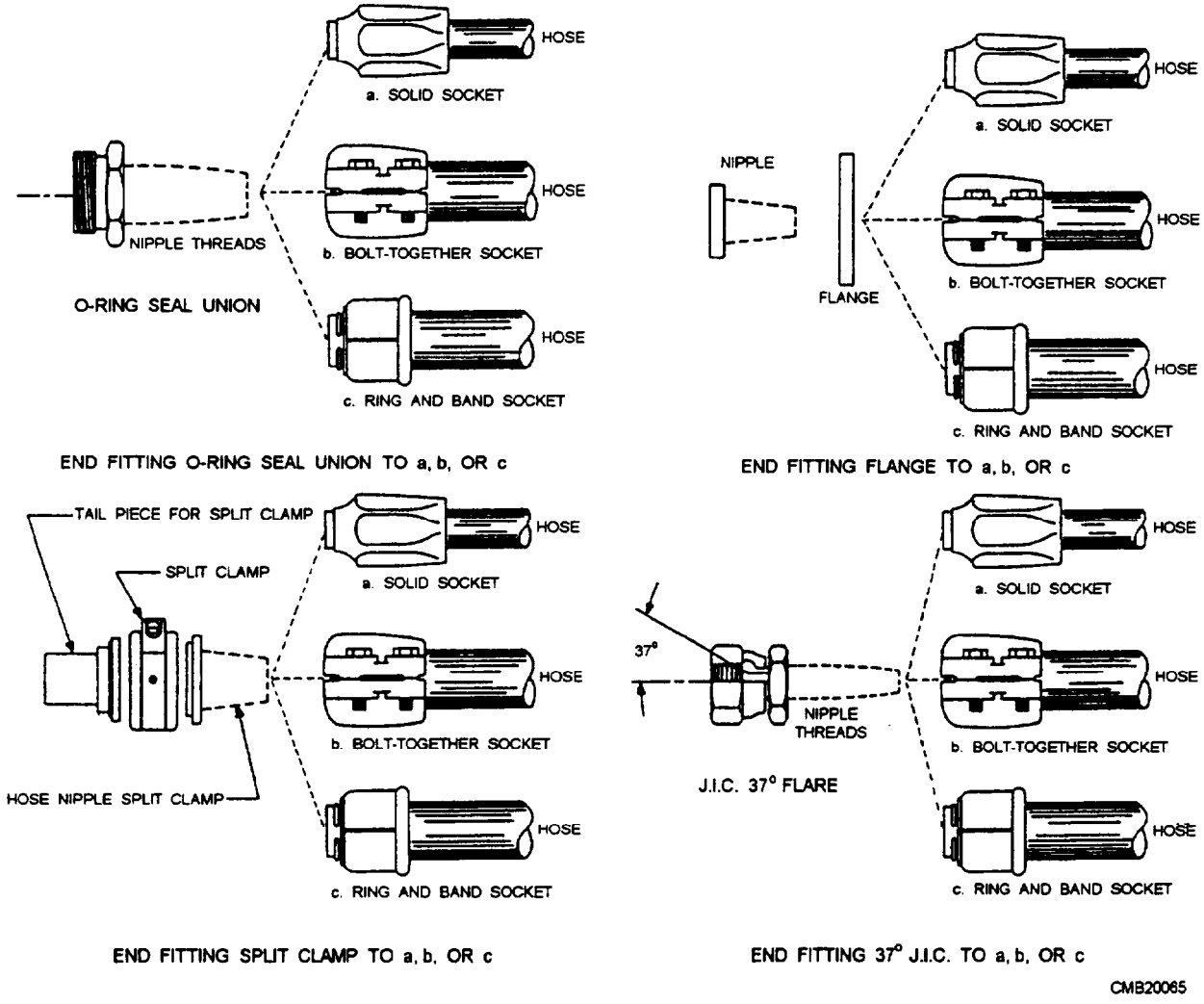

Figure 3-43.—End fittings and hose fittings.

Reusable hose fittings are pushed on, screwed on, or clamped onto the hose. When the hose wears out, the fittings can be removed and used on a new hose that is cut from stock. Many fittings can be converted to another thread type by changing the nipple in the socket.

NOTE

If hoses and fittings are matched incorrectly, the results can be pinhole leaks, ruptures, heat build ups, pressure drops, cavitation, and other failures.

QUICK-DISCONNECT COUPLERS.—Quick disconnect couplers are used where oil lines must be connected or disconnected frequently. They are self-sealing devices and do the work of two shutoff valves and a tube coupler.

These couplers are fast, easy to use, and keep oil loss at aminimum. More importantly, there is no need to drain or bleed the system every time a hookup is required. However, dust plugs must be used when the coupler is disconnected.

Sealing Materials and Devices

No hydraulic circuit can operate without the proper seals to hold the fluid under pressure in the system. Seals also keep dirt and other foreign materials out of the system.

Hydraulic seals appear to be simple objects when held in the hand but, in use, they are highly complex; precision parts must be treated carefully if they are to do their job properly.

Hydraulic seals are used in the following two main applications:

1. Static seals are used to seal fixed parts. Static seals are usually gaskets, but also may be O-rings or packings.

2. Dynamic seals are used to seal moving parts. Dynamic seals include shaft and rod seals and compression packings. A slight leakage in these seals is acceptable for seal lubrication.

SEALING MATERIALS.—There have been many different materials used in the development of sealing devices. The material used for a particular application depends on several factors: fluid compatibility; resistance to heat, pressure, and wear resistance; hardness; and type of motion.

The selection of the correct packings and gaskets and their proper installations are important factors in maintaining an efficient fluid power system. The types of seals to be used in a particular piece of equipment are specified by the equipment manufacturer.

Seals are made of materials that have been carefully chosen or developed for specific applications. These materials include polytetra-flouroethylene (PTFE), commonly called TEFLON™, synthetic rubber, cork, leather, metal, and asbestos. The most common types of materials are discussed in the following paragraphs.

Cork.—The physical properties of cork make it ideally suited as a sealing material in certain applications. The compressibility of cork seals makes them well-suited for confined applications in which little or no spread of the material is allowed. The compressibility of cork also makes a good seal that can be used under various pressures and allows the gasket to be cut to any desired thickness to fit any surface, while still forming an excellent seal. Cork is generally recommended for use where sustained temperatures do not exceed 275°F.

Synthetic Rubber.—The materials used in synthetic rubber seals are either neoprene or nitrile-butadiene base. These seals are available in a wide range of density, tensile strength, and elongations. Many factors contribute to make synthetic rubber ideal for seals. The elasticity of the material makes it easier in many applications. Since synthetic rubber seals are virtually impermeable in their compressed state, they require less sealing load than many other types of gaskets. Synthetic rubber seals are used in a variety of applications and are capable of functioning in temperature ranges as wide as -65°F to +300°F.

Leather.—Leather is a closely-knit material that is generally tough, pliable, and relatively resistant to abrasion, wear, stress, and the effects of temperature changes. Because it is porous, it is able to absorb lubricating fluids. This porosity makes it necessary to impregnate leather for most uses. In general, leather must be tanned and treated to make it useful as a sealing material. The tanning processes are those normally used in the leather industry. It is generally resistant to abrasion regardless of whether the grain side or flesh side is exposed to abrasive action. Leather remains flexible at low temperatures and can be forced with comparative ease into contact with metal flanges. When leather is properly impregnated, it is impermeable to most liquids and some gases. Leather is capable of withstanding the effects of temperatures ranging from -70°F to +220°F.

Metal.—One of the most common metal seals used in Navy equipment is copper. Flat copper rings are sometimes used as gaskets under adjusting screws to provide a fluid seal. Copper is easily bent and requires careful handling. In addition, copper becomes hard when used over a long period of time and when subjected to compression. It is advised that when a component is disassembled, the copper sealing rings should be replaced.

In some fluid power actuating cylinders, metallic piston rings are used as packing. These rings are similar in design to the piston rings used in engines.

TYPES OF SEALS.—Fluid power seals are usually typed according to their shape or design. These types include T-seals, O-rings, quad-rings, and U-cups, and so on. Some of the most commonly used seals are discussed in the following paragraphs.

T-Seals. —The T-seal has an elastomeric bidirectional sealing element resembling an inverted letter *T*. This sealing element is always paired with two special extrusion-resisting backup rings, one on each side of the T. The basic T-seal configuration is shown in figure 3-44, view A. The backup rings are single turn, bias cut, and are usually made of TEFLON™, nylon, or a combination of TEFLON and nylon. Nylon is widely used for T-seal backup rings because it provides excellent resistance to extrusion and has low friction characteristics.

The special T-ring configuration adds stability to the seal, eliminating spiraling and rolling. T-seals are used in applications where large clearances could occur as a result of expansion.

O-Rings.—An O-ring is doughnut-shaped. O-rings are usually molded from rubber compounds; however, they can be molded or machined from plastic materials. The O-ring is usually fitted into a rectangular groove that is machined into the item to be sealed.

An O-ring sealing system is often one of the first sealing systems considered when fluid closure is

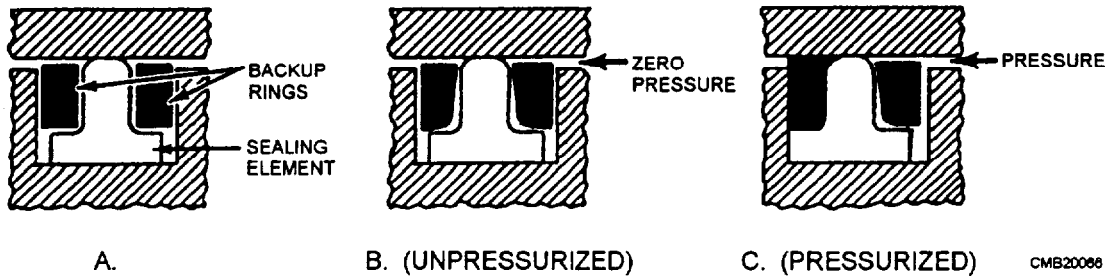

Figure 3-44.—T-seals.

designed because of the following advantages of such a system:

- Simplicity
- Ruggedness
- Low cost
- Ease of installation
- Ease in maintenance
- No adjustment required
- No critical torque in clamping
- Low distortion structure
- Small space requirement
- Effectiveness over wide pressure and temperature ranges

O-rings are used in both static (as gaskets) and dynamic (as packing) applications. An O-ring has always been the most satisfactory choice of seals in static applications when the fluids, temperatures, pressure, and geometry permit.

Quad-Rings.—The quad-ring is very similar to the O-ring, the major difference being that the quad-ring has a modified square type of cross section, as shown in figure 3-45. Quad-rings are molded and trimmed to extremely close tolerances in cross-sectional area, inside diameter, and outside diameter. Quad-rings are ideally suited for both low pressures and extremely high pressures.

U-CUPS.—The U-cup (fig. 3-46) is a popular packing due to its ease of installation and low friction. U-cups are used primarily for pressures below 1,500 psi; but, they can be used for higher pressures with the use of backup rings. When more than one U-cup is installed, they are installed back to back or heel to heel. This back-to-back installation is necessary to prevent a pressure trap (hydraulic lock) between two packings.

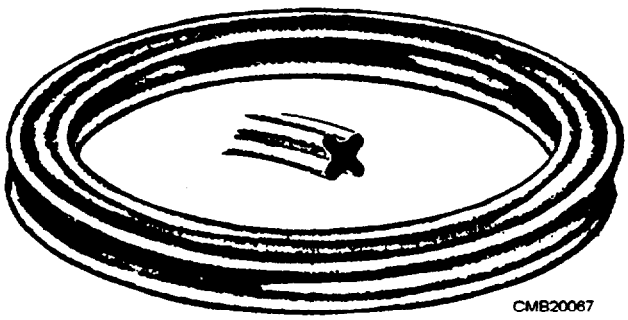

Figure 3-45.—Quad-ring.

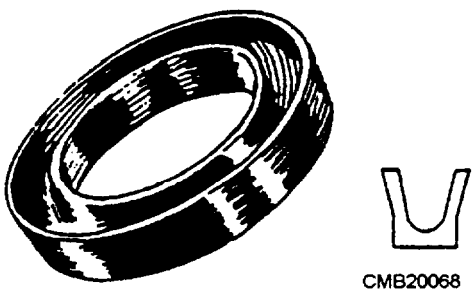

Figure 3-46.—Typical U-cup seal.

HYDRAULIC SYSTEM MAINTENANCE

Maintenance of a hydraulic system that is properly operated and cared for is a routine task. Maintenance usually consists of changing or cleaning filters and strainers, and occasionally adding or changing the fluid in the system. However, overheating, excessive pressure, and contamination can damage an improperly operated system.

Proper maintenance reduces your hydraulic troubles. By caring for the system using a regular maintenance program, you can eliminate common problems and anticipate special ones. These problems can be corrected before a breakdown occurs.

When a hydraulic system is worked on, cleanliness is No. 1. Dirt and metal particles can score valves, seize pumps, clog orifices, resulting in major repair work.

Oil and Filter Changes

Despite all the precautions you take when working on the hydraulic system, some contaminates will get into the system anyway. Good hydraulic oils will hold contaminates in suspension and the filters will collect them as oil passes through. A good hydraulic oil contains additives that work to keep contaminants from damaging or plugging the system. However, these additives lose their effectiveness after an extended period of time; therefore, oil changes at the recommended intervals can ensure that contamination is held to a minimum. By changing the oil at its recommended interval ensures that the additives will do their job.

Regular filter changes ensure solid particles are removed from the system. They should be changed more often under adverse operating conditions. When filters are changed, thoroughly clean the filter housing before installing a new filter. Remember to add enough fluid to compensate for any fluid lost in filter replacement.

Cleaning and Flushing the System

Cleaning and flushing the system should be performed based on the manufacturer's recommendation or when the system is known to be contaminated. The nature and amount of deposits in a particular system may vary widely. Inspection of the system may show any condition between a sticky, oily film and a hard, solid deposit (gum or lacquer formation) which completely chokes off the system. If the system is drained periodically according to the manufacturer's recommendations, the formation of gum and lacquer will be greatly reduced.

If there is no gum or lacquer formation suspected, clean the system as follows:

1. Drain the system completely.
2. After draining, clean any sediment from the reservoir, and replace the filter elements.

If flushing is required because the oil is badly contaminated, clean and flush the system as follows:

1. Drain the system completely.
2. Refill the system with the recommended hydraulic oil for the system involved.
3. Operate the equipment to cycle the flushing oil through the system. Ensure that all valves are operated so that the new oil goes through the lines.

NOTE

The time necessary to clean the system will vary, depending on the condition of the equipment. Usually from 4 to 48 hours is sufficient for most systems.

(Drain out the flushing oil, replace the filters, and refill the system with clean hydraulic oil of the recommended type.)

If gums or lacquer has formed on working parts and the parts are sticking, remove the affected parts and clean them thoroughly. Consult the manufacturer's manual before removing and cleaning any parts for proper procedures.

Preventing Leaks

Leaking hydraulic connections are frequent reasons for maintenance. Some leaks are external, being evident on the outside of components. Others are internal, which does not result in actual loss of oil, but it does reduce the efficiency of the system.

INTERNAL LEAKAGE.—A small amount of internal leakage is allowed to provide lubrication of moving parts. This leakage is normal and does not result in faulty operation. On the other hand, an excess of internal leakage results in slow operation, loss of power, and overheating of the hydraulic fluid. The cylinders may creep or drift and, if the leak is bad enough, the control valves may not function properly.

Internal leaks are caused by wear of the seals and mating parts during normal operation. Leakage is accelerated by using oil that has too low a viscosity because the oil thins faster at higher temperatures. High pressures also force more oil out of leaking points in the system. This is why excessive pressures can actually reduce the efficiency of the hydraulic system.

Internal leaks are hard to detect. Usually, all you can do is observe the operation of the system for signs of sluggishness, creeping, and drifting. When these signs appear, it is time to test the system and pinpoint the problem.

EXTERNAL LEAKAGE.—External leaks not only look bad but make it hazardous for the operators of the equipment. A leak that allows floor plates to become slippery may cause the operator to fall on or off the

equipment and get injured. A leak that drips on hot engine parts may start a fire that could result in the loss of the equipment.

Every joint in a hydraulic system is a potential point of leakage. This is why the number of connections in a system must be kept to a minimum. Leaks often arise from hoses that deteriorate and rupture under pressure. Such a leak is usually first noticed when equipment has remained idle for a period of time and hydraulic fluid is found underneath. Figures 3-47 and 3-48 show the proper procedures for repairing hoses with reusable fittings. You can remove a medium- or high-pressure hose from its fittings by unscrewing the nipple from the socket and then the socket from the hose.

Here are some hints that will help reduce hose leakage and maintenance:

- Leave a little slack in the hose between connections to allow for swelling when pressure is applied. A taut hose is likely to pull out of its fittings.
- Do not loop a hose unless the manufacturer requires it. This causes unnecessary flexing of the hose as pressure changes. Angled fittings should be used instead of loops.
- Do not twist a hose; twisting causes the hoses to weaken.
- Use clamps or brackets to keep a hose away from moving parts or to prevent chafing when the hose flexes.
- Keep hoses away from hot surfaces, such as manifold and exhaust systems. If you are unable to do so, install a heat shield to protect the hose.
- Route hoses so there are no sharp bends. This is critical with high-pressure hoses.

Sometimes you can stop leaks at fittings by tightening the hose connections. Tighten them only enough to stop the leakage. If you cannot stop a leak by tightening, secure the equipment and remove the connection. Inspect the threaded and mating parts of the connector. Look for cracks in the flared ends of the tubing. If O rings are used, examine them for cuts or tears. Any damaged or defective items should be replaced.

SOCKETLESS
(Low Pressure)

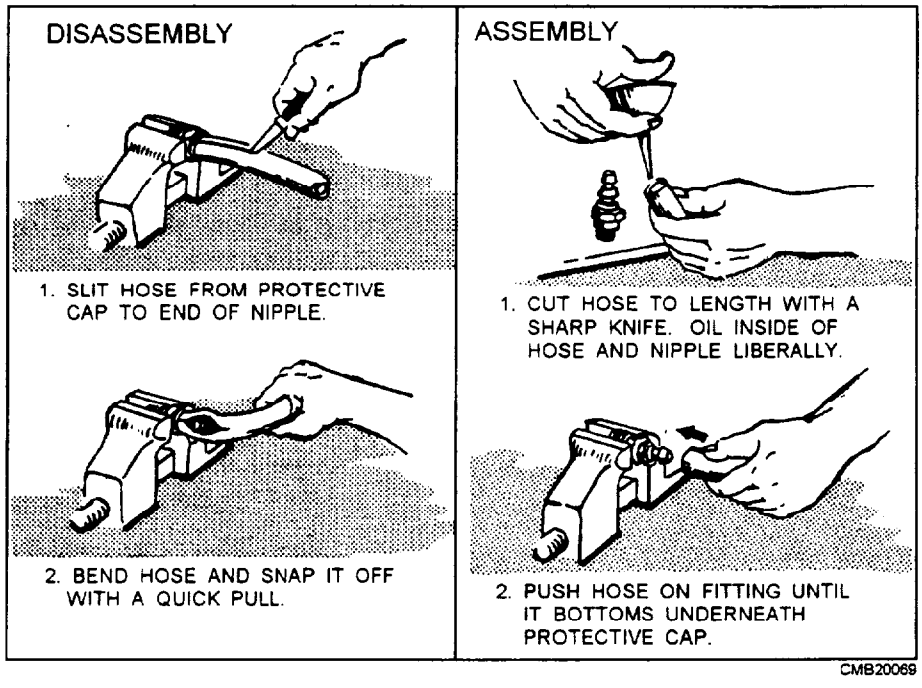

Figure 3-47.—Replacing low-pressure hose on a reusable fitting.

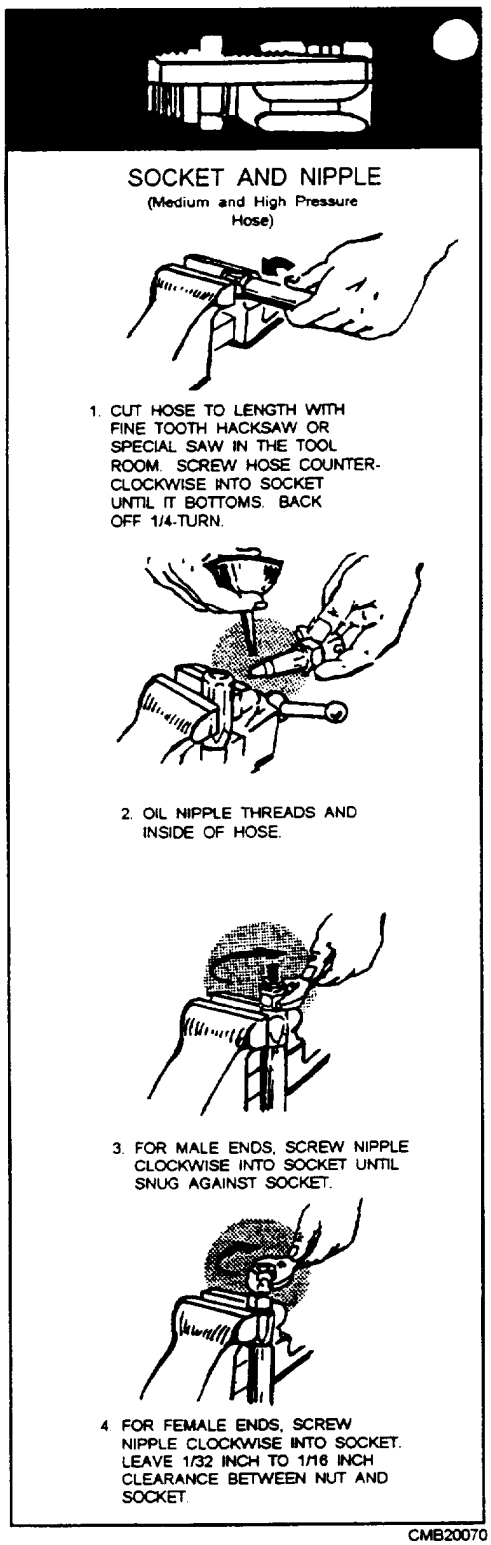

Figure 3-48.—Replacement procedures for medium- and high-pressure hose reusable fittings.

Cylinders may leak around piston rods or rams. You can repair some leaks by tightening the packing located in the cylinder end cap. Tighten the end cap evenly until only a light film of oil is noticeable on the rod when it is extended. **DO NOT** overtighten; this results in rapid failure of the packing and causes scoring of the rod. If you find an internal seal instead of packing, the cylinder must be removed and disassembled to stop the leak. Components can leak, but care in assembly and use of new seals, packings, and gaskets during overhaul will reduce this problem.

Preventing Overheating

Heat causes hydraulic fluid to break down faster and lose its effectiveness. In many systems, heat is dissipated through the lines, the components, and the reservoir to keep the fluid fairly cool. On high-pressure, high-speed systems, oil coolers are used to dissipate the extra heat.

The following maintenance tips will help prevent overheating.

- Ensure oil is at the proper level.
- Remove dirt and mud from lines, reservoir, and coolers.
- Repair dented and kinked lines.
- Keep relief valves adjusted properly.
- Do not overspeed or overload the system.
- Never hold control valves in the power position too long.

If the system still overheats, refer to the manufacturer's manuals for charts that list the causes and remedies for overheating.

REVIEW 1 QUESTIONS

Q1. If a force of 20 pounds is placed on an input piston with an area of 4 square inches, what is the pressure within the fluid?

Q2. If an input piston that is 3 square inches is pushed down 2 inches, how far will the displaced fluid raise an output piston that is 4 square inches?

Q3. What type of hydraulic fluid contains additives to reduce the foaming action?

Q4. A properly constructed hydraulic reservoir should be capable of what three functions?

Q5. That device is installed in a hydraulic system to prevent foreign particles from remaining in the system?

Q6. What component of a hydraulic system supplies a flow of fluid to the system?

Q7. What type of valve is used to regulate the flow of hydraulic fluid?

Q8. What are the three dimensions of any tubular product?

Q9. What are the three basic parts of a flexible hose?

Q10. What type of connector is used in a low-pressure pipe system?

Q11. When tubing nuts are tightened what tool should you use?

Q12. What type of seal application allows for a slight leakage for seal lubrication?

Q13. What is the most common metal seal used in Navy equipment?

Q14. What type of seal is ideally suited for both low-pressure and high-pressure applications?

Q15. What kind of leakage is caused by the wearing of seals and mated parts?

PNEUMATIC SYSTEMS

Learning Objective: Explain the operating principles of a pneumatic system. Identify operational characteristics and service procedures applicable to heavy-duty compressors.

The word *pneumatics* is a derivative of the Greek word *pneuma,* which means air, wind, or breath. Pneumatics can be defined as that branch of engineering science that pertains to gaseous pressure and flow. As used in this manual, pneumatics is the portion of fluid power in which compressed air, or other gas, is used to transmit and control power to actuating mechanisms.

This section discusses the basic principles of pneumatics, characteristics of gases, heavy-duty air compressors, and air compressor maintenance. It also discusses the hazards of pneumatics, methods of controlling contamination, and safety precautions associated with compressed gases.

BASIC PRINCIPLES OF PNEUMATICS

Gases differ from liquids in that they have no definite volume; that is, regardless of size or shape of the vessel, a gas will completely fill it. Gases are highly compressible, while liquids are only slightly so. Also, gases are lighter than equal volumes of liquids, making gases less dense than liquids.

Compressibility and Expansion of Gases

Gases can be readily compressed and are assumed to be perfectly elastic. This combination of properties gives gas the ability to yield to a force and return promptly to its original condition when the force is removed. These are the properties of air that is used in pneumatic tires, tennis balls, and other deformable objects whose shapes are maintained by compressed air.

Kinetic Theory of Gases

In an attempt to explain the compressibility of gases, consider the container shown in figure 3-49 as containing a gas. At any given time, some molecules are moving in one direction, some are travelling in other directions, and some may be in a state of rest. The average effect of the molecules bombarding each container wall corresponds to the pressure of the gas. As more gas is pumped into the container, more molecules are available to bombard the walls, thus the pressure in the container increases.

Increasing the speed with which the molecules hit the walls can also increase the gas pressure in a container. If the temperature of the gas is raised, the molecules move faster, causing an increase in pressure. This can be shown by considering the automobile tire. When you take a long drive on a hot day, the pressure in the tires increases and a tire that appeared to be soft in cool morning temperature may appear normal at a higher midday temperature.

Boyle's Law

When the automotive tire is initially inflated, air that normally occupies a specific volume is compressed into a smaller volume inside the tire. This increases the pressure on the inside of the tire.

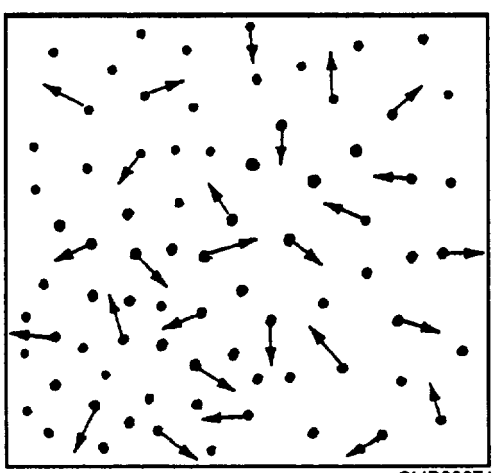

Figure 3-49.—Molecular bombardment creating pressure.

Charles Boyle, an English scientist, was among the first to experiment with the pressure-volume relationship of gas. During an experiment when he compressed a volume of air, he found that the volume decreased as pressure increased, and by doubling the force exerted on the air, he could decrease the volume of the air by half (fig. 3-50).

Temperature is a dominant factor affecting the physical properties of gases. It is of particular concern in calculating changes in the state of gases. Therefore, the experiment must be performed at a constant temperature. The relationship between pressure and volume is known as Boyle's law. Boyle's law states **when the temperature of a gas is constant, the volume of an enclosed gas varies inversely with pressure.**

Boyle's law assumes conditions of constant temperature. In actual situations this is rarely the case. Temperature changes continually and affects the volume of a given mass of gas.

Charles's Law

Jacques Charles, a French physicist, provided much of the foundation for modem kinetic theory of gases. Through experiments, he found that all gases expand and contract proportionally to the change in absolute temperature, providing the pressure remains constant. The relationship between volume and temperature is known as Charles's law. Charles's law states that **the volume of a gas is proportional to its absolute temperature if constant pressure is maintained.**

PNEUMATIC GASES

Gases serve the same purpose in pneumatic systems as liquids serve in hydraulic systems. Therefore, many of the same qualities that are considered when selecting a liquid for a hydraulic system must be considered when selecting a gas for a pneumatic system.

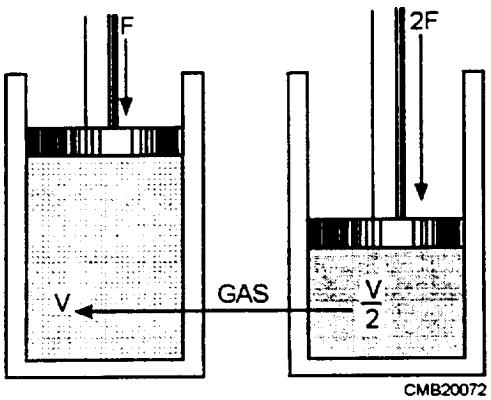

Figure 3-50.—Gas compressed to half its original volume by a doubled force.

Qualities

The ideal fluid medium for a pneumatic system must be a readily available gas that is nonpoisonous, chemically stable, free from any acids that can cause corrosion of system components, and nonflammable. It should be a gas that will not support combustion of other elements.

Gases that have these desired qualities may not have the required lubricating power. Therefore, lubrication of the components must be arranged by other means. For example, some air compressors are provided with a lubricating system, some components are lubricated upon installation or, in some cases, lubrication is introduced into the air supply line (in-line oilers).

Two gases meeting these qualities and most commonly used in pneumatic systems are compressed air and nitrogen. Since nitrogen is used very little except in gas-charged accumulators, we will only discuss compressed air.

Compressed Air

Compressed air is a mixture of all gases contained in the atmosphere. However, in this manual it is referred to as one of the gases used as a fluid medium for pneumatic systems.

The unlimited supply of air and the ease of compression make compressed air the most widely used fluid for pneumatic systems. Although moisture and solid particles must be removed from the air, it does not require the extensive distillation or separation process required in the production of other gases.

Compressed air has most of the desired characteristics of a gas for pneumatic systems. It is nonpoisonous and nonflammable but does contain oxygen which supports combustion. The most undesirable quality of compressed air as a fluid medium for a pneumatic system is moisture content. The atmosphere contains varying amounts of moisture in vapor form. Changes in the temperature of compressed air will cause condensation of moisture in the system. This condensed moisture can be very harmful to the system and may freeze the line and components during cold weather. Moisture separators and air dryers are installed in the lines to minimize or eliminate moisture in systems where moisture would deteriorate system performance.

An air compressor provides the supply of compressed air at the required volume and pressure. In

most systems the compressor is part of the system with distribution lines leading from the compressor to the devices to be operated.

Compressed air systems are categorized by their operating pressure as follows:

- High-pressure (HP)—3,000 to 5,000 psi
- Medium-pressure (MP)—151 to 1,000 psi
- Low-pressure (LP)—150 psi and below

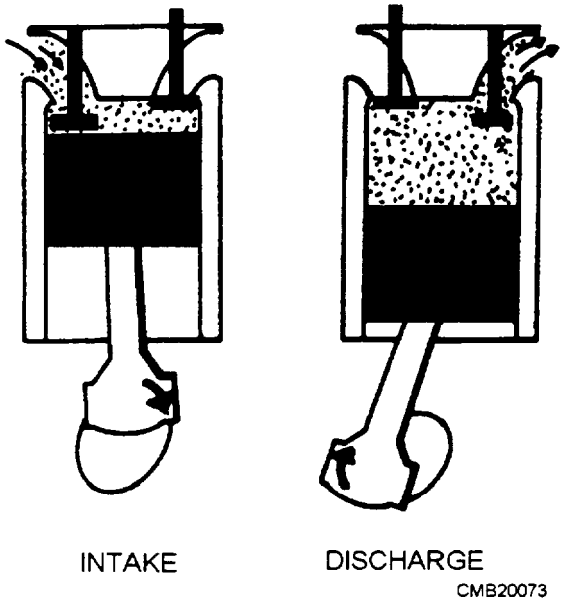

Figure 3-51.—Intake and compression strokes in a reciprocating compressor.

HEAVY-DUTY AIR COMPRESSORS

Compressors are used in pneumatic systems to provide requirements similar to those required by pumps in hydraulic systems. They furnish compressed air as required to operate the units of the pneumatic systems.

Even though manufactured by different companies, most compressors are quite similar. They are governed by a pressure control system that can be adjusted to compress air to the maximum pressure.

Compressor Design

The compressor unit may be of the reciprocating, rotary, or screw design.

The **reciprocating** compressor is similar to that of an automotive engine. They may be air- or liquid-cooled. As the pistons move up and down, air flows into the cylinder through the intake valve. As the piston moves upward, the intake valve closes and traps air in the cylinder. The trapped air is compressed until it exceeds the pressure within the collecting manifold, at which time the discharge valve opens and the compressed air is forced into the air manifold (fig. 3-51). The reciprocating compressor is normally connected to the engine through a direct coupling or a clutch. The engine and compressor are separate units.

The **rotary** compressor has a number of vanes held in captive in slots in the rotor. These vanes slide in and out of the slots, as the rotor rotates. Figure 3-52 shows an end

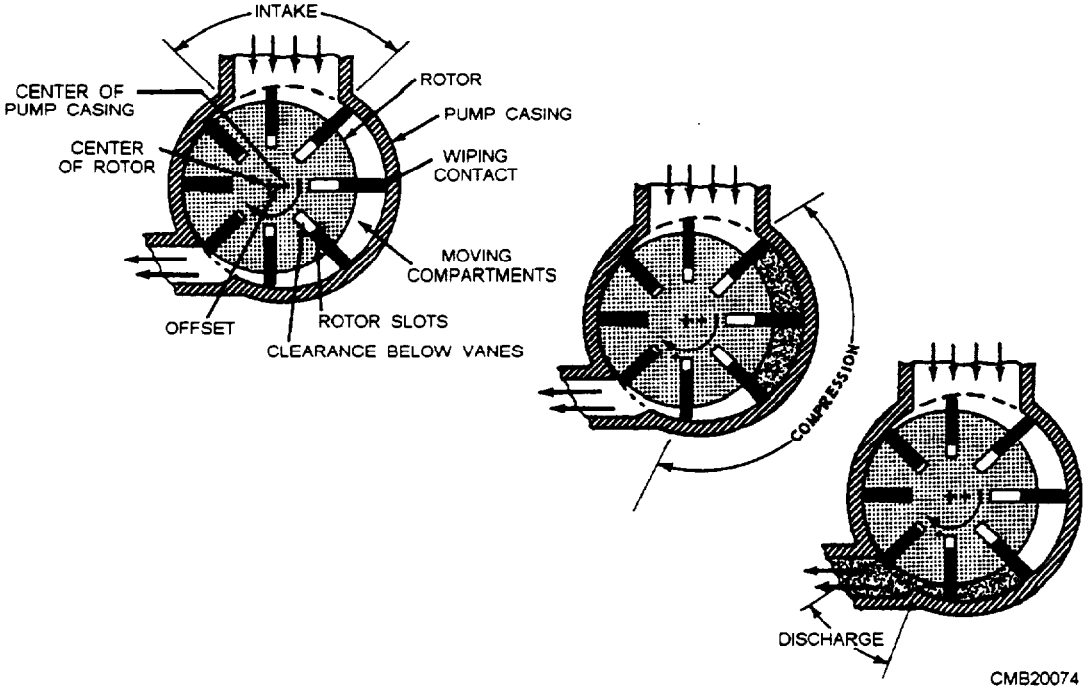

Figure 3-52.—Compression cycle in a rotary compressor.

view of the vanes in the slots. The rotor revolves about the center of the shaft that is offset from the center of the pumping casing. Centrifugal force acting on the rotating vanes maintains contact between the edge of the vanes and the pump casing. This feature causes the vanes to slide in and out of the slots, as the rotor turns.

Notice in figure 3-52 the variation in the clearance between the vanes and the bottom of the slots, as the rotor revolves. The vanes divide the crescent-shaped space between the offset rotor and the pump casing into compartments that increase in size, and then decrease in size, as the rotor rotates. Free air enters each compartment as successive vanes pass across the air intake. This air is carried around in each compartment and is discharged at a higher pressure due to the decreasing compartment size (volume) of the moving compartments as they progress from one end to the other of the crescent-shaped space.

The compressor is lubricated by oil circulating throughout the unit. All oil is removed from the air by an oil separator before the compressed air leaves the service valves.

The **screw** compressors used in the NCF are direct-drive, two-stage machines with two precisely matched spiral-grooved rotors (fig. 3-53). The rotors provide positive-displacement internal compression smoothly and without surging. Oil is injected into the compressor unit and mixes directly with the air, as the rotors turn compressing the air. The oil has three primary functions:

1. As a coolant, it controls the rise in air temperature normally associated with the heat of compression.
2. It seals the leakage paths between the rotors and the stator and also between the rotors themselves.
3. It acts as lubricating film between the rotors allowing one rotor to directly drive the other, which is an idler.

After the air/oil mixture is discharged from the compressor unit, the oil is separated from the air. The oil that mixes with the air during compression passes into the receiver-separator where it is removed and returned to the oil cooler in preparation for re-injection.

All large volume compressors have protection devices that shut them down automatically when any of the following conditions develop:

1. The engine oil pressure drops below a certain point.

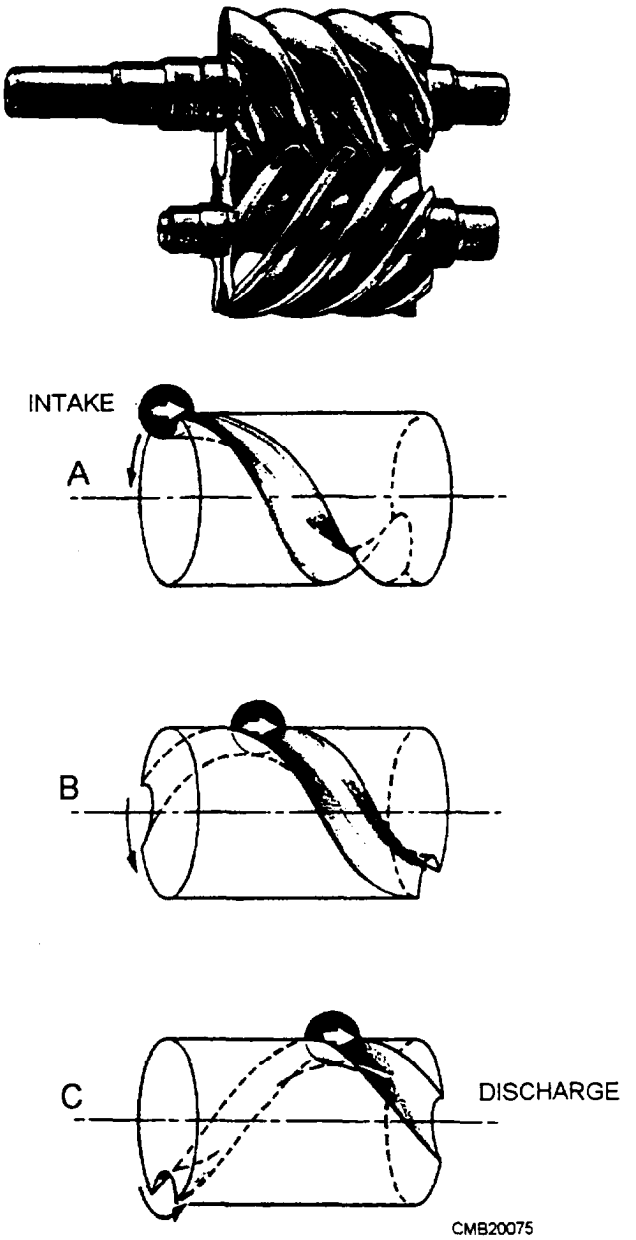

Figure 3-53.—Compression cycle in a screw compressor.

2. The engine coolant rises above a predetermined temperature.
3. The compressor discharge rises above a certain temperature.
4. Any of the protective safety circuits develop a malfunction.

Other features that may be observed in the operation of the air compressors is a governor system whereby the engine speed is reduced when less than full air delivery is used. An engine and compression control system prevents excessive buildup in the receiver.

Intercoolers

When air is compressed, heat is generated. This heat causes the air to expand, thus requiring an increase in power for further compression. If this heat is successfully removed between stages of compression, the total power required for additional compression may be reduced by as much as 15 percent. In multistage reciprocating compressors, this heat is removed by means of intercoolers that are heat exchangers placed between each compression stage. Rotary air compressors are cooled by oil and do not use intercoolers.

Aftercoolers

It is obvious that the presence of water or moisture in an air line is not desirable. The water is carried along through the line into the tool where the water washes away the lubricating oil, causing the tool to run sluggishly and increases maintenance. The effect is particularly pronounced in the case of high-speed tools where the wearing surfaces are limited in size and excessive wear reduces efficiency by creating internal air leakage.

Further problems may result from the decrease in temperature caused by the sudden expansion of air at the tool. This low temperature creates condensation that freezes around the valves, ports, and outlets. This condition obviously impairs the operational efficiency of the tool and cannot be allowed.

The most satisfactory means of minimizing these conditions is the removal of the moisture from the air immediately after compression and before the air enters the distribution system. This may be accomplished in reciprocating compressors through the use of an aftercooler that is an air radiator that transfers heat from the compressed air to the atmosphere. The aftercooler reduces the temperature of the compressed air to the condensation point where most of the moisture is removed. Cooling the air not only eliminates the difficulties which moisture causes at points where air is used but also ensures better distribution.

Receiver Tank

The receiver tank is of welded steel construction and is installed on the discharge side of the compressor. It acts as a surge tank as well as a condensation chamber for the removal of oil and water vapors. It stores enough air during operation to actuate the pressure control system and is fitted with at least one service valve, a drain or blow-by valve, and a safety valve.

Pressure-Control System

All portable air compressors are governed by a pressure-control system. The control system is designed to balance the compressor's air delivery and engine speed with varied demands for compressed air.

In a reciprocating compressor the pressure-control system causes the engine to idle and the suction valves to remain open when the pressure reaches a set maximum, thus making the compressor unit inoperative. When the air pressure drops below a set minimum, the pressure-control unit causes the engine to increase speed and the suction valves to close, thereby resuming the com pression cycle.

The rotary compressor output is governed by varying the engine speed. The engine will operate at the speed required to compress enough air to supply the demand at a fairly constant pressure. When the engine has slowed to idling speed as a result of low demand, a valve controls the amount of free air that may enter the compressor.

A screw compressor output is governed by automatic control that provides smooth, stepless capacity regulation from full load to no load in response to the demand for air. From a full load down to no load is accomplished by a floating-speed engine control in combination with the variable-inlet compressor.

AIR COMPRESSOR MAINTENANCE

A number of built-in features that make portable compressors easy to maintain include:

- an automatic blowdown valve for releasing air pressure when the engine is stopped,
- a valve for draining moisture that accumulates in the receiver tank,
- a drain cock at the bottom of the piping at the bottom of the oil storage tank,
- an air filter service indicator to show when the filter needs servicing, and
- a demister, or special filter, that separates lubricating oil from compressed air.

Remember a good maintenance program is the key to a long machine life. So it is up to both the operator and the mechanic to ensure that the maintenance is performed on time every time.

Air Cleaner Servicing

The air cleaner contains a primary and secondary dry filter element (fig. 3-54). An air filter restriction indicator is located at the rear of the air filter housing to alert the operator of the need to service the filters. When a red band appears in the air filter restriction indicator, secure the compressor and service the filters.

The primary element is cleanable by using compressed air. When the element is cleaned, never let the air pressure exceed 30 psi. The secondary filter is not cleanable and should be replaced when necessary. Reverse flush the primary element by directing compressed air up from the inside out. Continue reverse flushing until all dust is removed. Should any oil or greasy dirt remain on the filter surface, the element should be replaced. When the element is satisfactorily cleaned, inspect it thoroughly before installation. Inspection procedures are as follows:

- Place a bright light inside the element to inspect it for damage. Concentrated light will shine through the element and disclose any holes. A damaged element is to be replaced.
- Inspect all gaskets and gasket contact surfaces of the housing. Should faulty gaskets be evident. replace them immediately.
- After the element has been installed, inspect and tighten all air inlet connections before resuming operation.

CAUTION

Do not strike the element against any hard surface to dislodge dust. This will damage the sealing surfaces and possibly rupture the element.

Main Oil Filter Servicing

The main oil filter is a replaceable cartridge. The servicing of the filter is required as indicated by the maintenance indicator on the filter or each time the compressor oil is changed. Under normal operating conditions. the oil is changed at approximately 500 operating hours. Under severe conditions. more frequent servicing is required.

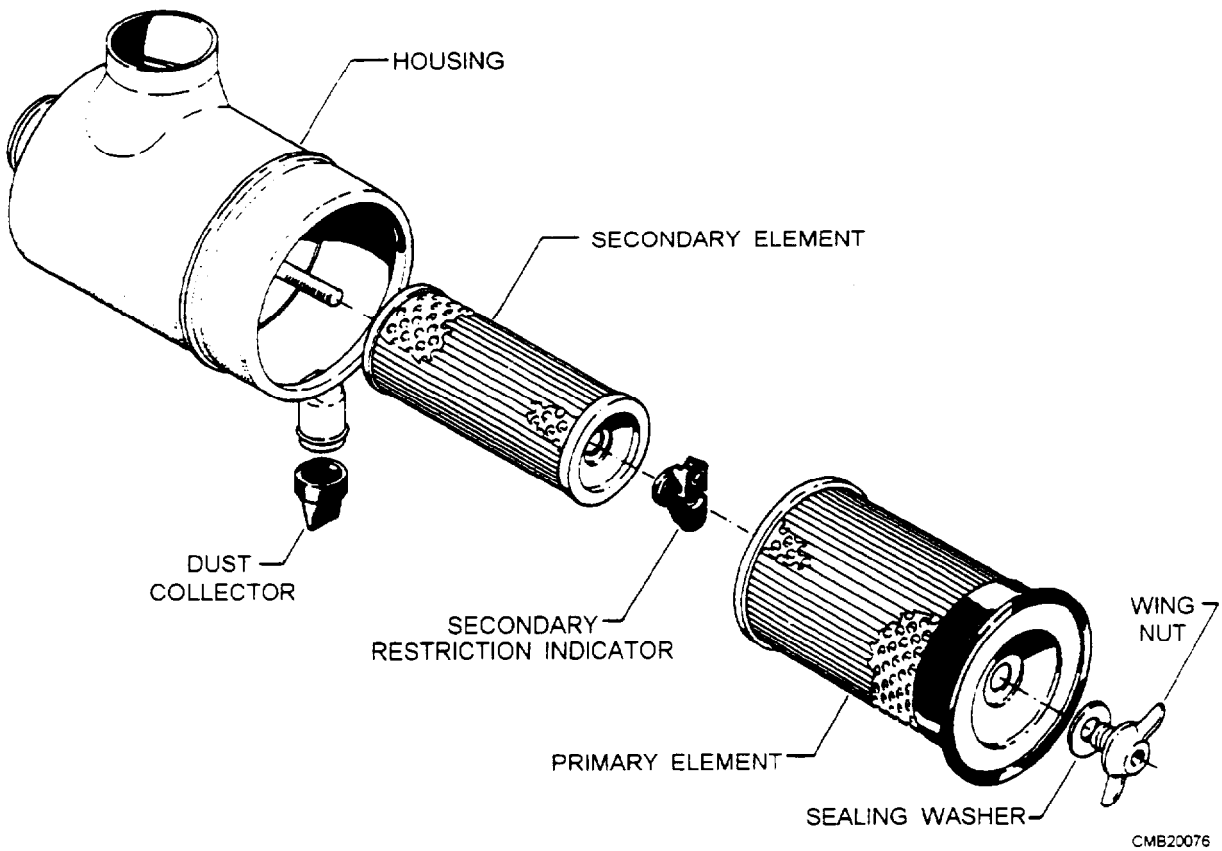

Figure 3-54.—Air filter.

Demister or Separator Element

The demister, or separator element, is located inside the receiver tank (fig. 3-55). Replacement of the demister is indicated by the maintenance indicator (usually mounted on the receiver tank but also can be remote-mounted) or any sign of oil in the air at the service valves. You can reach the demister after removing the plate on the end of the receiver tank.

CONTAMINATION CONTROL

As in hydraulic systems, fluid contamination is the leading cause of malfunctions in pneumatic systems. In addition to the solid particles of foreign matter that find their way to enter the system, there is also the problem of moisture. Most systems are equipped with one or more devices to remove contamination. These include filters, water separators, air dehydrators, and chemical dryers. Most systems contain drain valves at critical low points in the system. These valves are opened periodically to allow the escaping gas to purge a large percentage of the contaminants, both solids and moisture, from the system. In some systems these valves are automatic, while in others they must be operated manually.

Removing lines from various components throughout the system and then attempting to pressurize the system, causing a high rate of air flow through the system, does complete purging. The air flow will cause the foreign matter to be dislodged and blown from the system.

NOTE

If an excessive amount of foreign matter, particularly oil, is blown from any one system, the lines and components should be removed and cleaned or, in some cases, replaced.

In addition to monitoring the devices installed to remove contamination, it is your responsibility as a mechanic to control the contamination. You can do this by using the following maintenance practices:

- Keep all tools and the work area in a clean, dirt-free condition.
- Cap or plug all lines and fittings immediately after disconnecting them.
- Replace all packing and gaskets during assembly procedures.
- Connect all parts with care to avoid stripping metal slivers from threaded areas. Install and torque all fittings and lines according to applicable technical manuals.

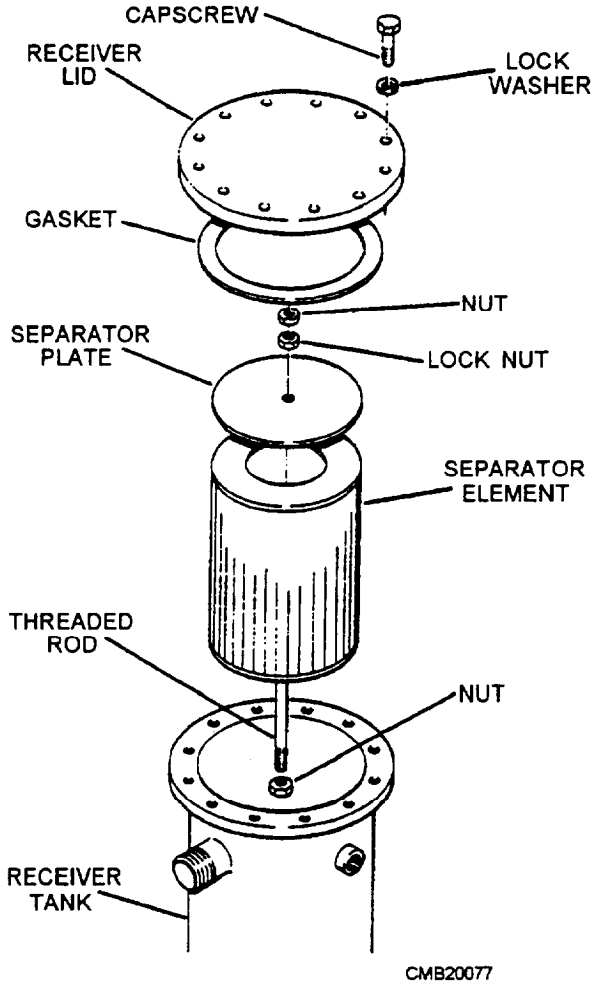

Figure 3-55.—Demister (separator element).

POTENTIAL HAZARDS

All compressed gases are hazardous. Compressed air and nitrogen are neither poisonous nor flammable, but should be handled with care. Some pneumatic systems operate at pressures exceeding 3,000 psi. Lines and fittings have exploded, injuring personnel and property. Literally thousands of careless workers have blown dust or other harmful particles into their eyes by careless handling of compressed air outlets.

If you ever have to handle nitrogen gas, remember that it will not support life, and when released in a confined space, it will cause asphyxia (the loss of consciousness as a result of too little oxygen and too much carbon dioxide in the blood). Although compressed air and nitrogen seem safe in comparison with other gases, do not let overconfidence lead to personal injury.

SAFETY PRECAUTIONS

To minimize personal injury and equipment damage when using compressed gases, observe all

SAFETY PRECAUTIONS

To minimize personal injury and equipment damage when using compressed gases, observe all practical operating safety precautions, including the following:

- Do **NOT** use compressed air to clean parts of your body or clothing or to perform general space cleanup instead of sweeping.
- **NEVER** attempt to stop or repair a leak while the leaking portion is still under pressure. Always isolate. depressurize. and tag out the portion of the system to be repaired.
- Avoid the application of heat to the air piping system or components, and avoid striking a sharp, heavy blow on any pressurized part of the piping system.
- Avoid rapid operation of manual valves. The heat of compression caused by a sudden high-pressure flow into an empty line or vessel can cause an explosion if oil is present. Valves should be slowly cracked open until air flow is noted and should be kept in this position until pressures on both sides of the valve have equalized. The rate of pressure rise should be kept under 200 psi per second, if possible. Valves may then be opened fully.
- Do **NOT** subject compressed gas cylinders to temperatures greater than 130°F. Remember, any pressurized system can be hazardous to your health if it is not maintained and operated carefully and safely.

REVIEW 2 QUESTIONS

Q1. What two properties allow gas the ability to yield to force and return to its original condition when the force is removed?

Q2. What law states that when the temperature of a gas is constant, the volume of enclosed gas varies inversely with pressure?

Q3. What four qualities should the ideal gas have for apneumatic system?

Q4. What is the most undesirable quality of compressed air when used as a fluid medium for a pneumatic system?

Q5. A pneumatic system with an operating pressure of 500 psi is known as what type of system?

Q6. What are the three designs of air compressors?

Q7. What device in a rotary air compressor removes oil from the compressed air before the air leaves the service valves?

REVIEW 1 ANSWERS

Q1. 5 psi

Q2. 1 inch

Q3. Petroleum-based fluids

Q4. Dissipating heat, separating air, settling out contamination

Q5. Filters

Q6. Pump

Q7. Flow-control valve

Q8. Inside diameter, outside diameter, wall thickness

Q9. Inner tube, reinforcement layers, outer cover

Q10. Threaded connectors

Q11. Torque wrench

Q12. Dynamic seal

Q13. Copper

Q14. Quad-ring

Q15. Internal leakage

REVIEW 2 ANSWERS

Q1. Compressibility and elasticity

Q2. Boyle's law

Q3. Nonpoisonous, chemical stable, free from corrosive acids, and nonflammable

Q4. Moisture content

Q5. Medium-pressure system

Q6. Reciprocating, rotary, and screw

Q7. Oil separator