Chapter 16 MISCELLANEOUS MEASURING GAGES

HOW TO CHOOSE AND USE THEM

The “Types and Uses” section provides you with a list of miscellaneous measuring gages. These pages should help you select the right gage for the job.

The “Using” section tells you how to use the miscellaneous measuring gages to perform the measuring operation. The “Care” procedures tell you how to care for the gages.

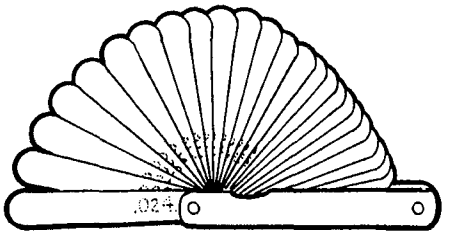

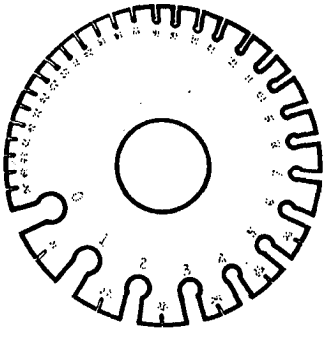

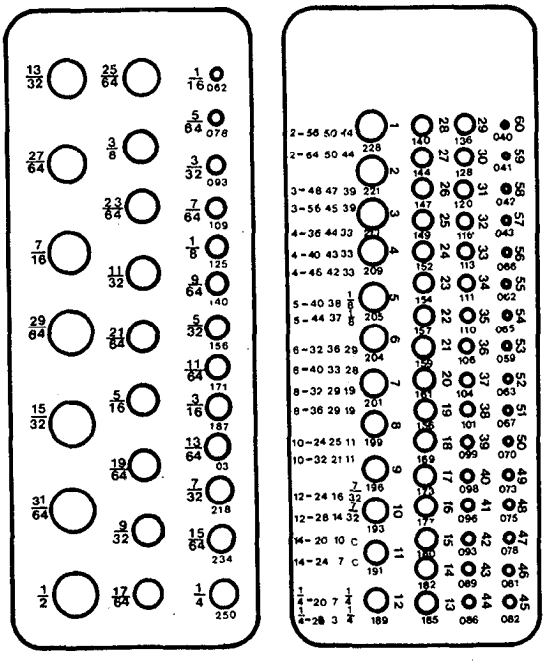

INDEX

Item	Page
TYPES AND USES	16-2
Thickness (feeler) gages	16-2
Center gage	16-2
Screw pitch gages	16-3
Small hole gage set	16-3
Telescoping gages	16-3
Thread cutting tool gages	16-4
Fillet and radius gages	16-4
Drill point gage	16-4
Wire gages	16-4
Drill gages	16-5
Marking gages	16-5
USING	16-5
Thickness gage	16-5
Center gage	16-6
Screw pitch gage	16-6
Small hole gage	16-6
Telescoping gage	16-7
Thread cutting tool gage	16-7
Fillet and radius gage	16-7
Drill point gage	16-8
Wire gage	16-8
Drill gage	16-8
Marking gage	16-9
CARE	16-9

TYPES AND USES

THICKNESS (FEELER) GAGES

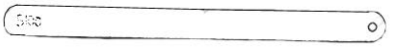

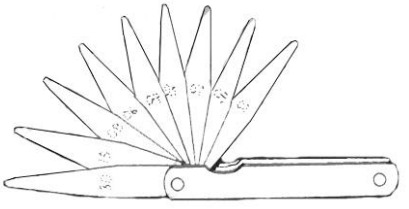

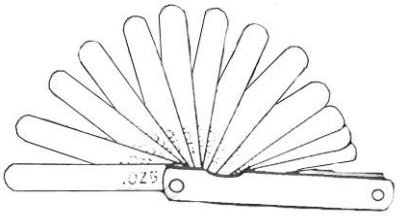

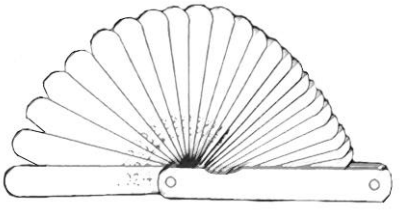

Thickness (feeler) gages are made in many shapes and sizes; usually 2 to 26 blades are grouped into one tool and graduated in thousandths of an inch.

Most thickness blades are straight, while others are bent at the end at 45 degree and 90 degree angles. Some thickness gages are grouped so that there are several short and several long blades together. Thickness gages are also available in single blades and in strip form for specific measurements. For convenience, many groups of thickness gages are equipped with a locking screw in the case that locks the blade to be used in the extended position.

These gages are fixed in leaf form, which permits the checking and measuring of small openings such as contact points, narrow slots, and so forth. They are widely used to check the flatness of parts in straightening and grinding operations and in squaring objects with a try square.

CENTER GAGE

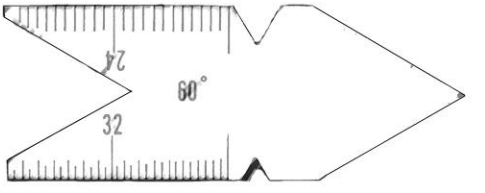

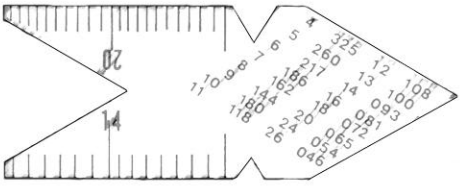

The center gage is graduated in 14ths, 20ths, 24ths, and 32nds of an inch. The back of the center gage has a table giving the double depth of thread in thousandths of an inch for each pitch. This information is useful in determining the size of tap drills. Sixty-degree angles in the shape of the gage are used for checking Unified and American threads as well as for older American National or U.S. Standard threads and for checking thread cutting tools.

TYPES AND USES - Continued

SCREW PITCH GAGES

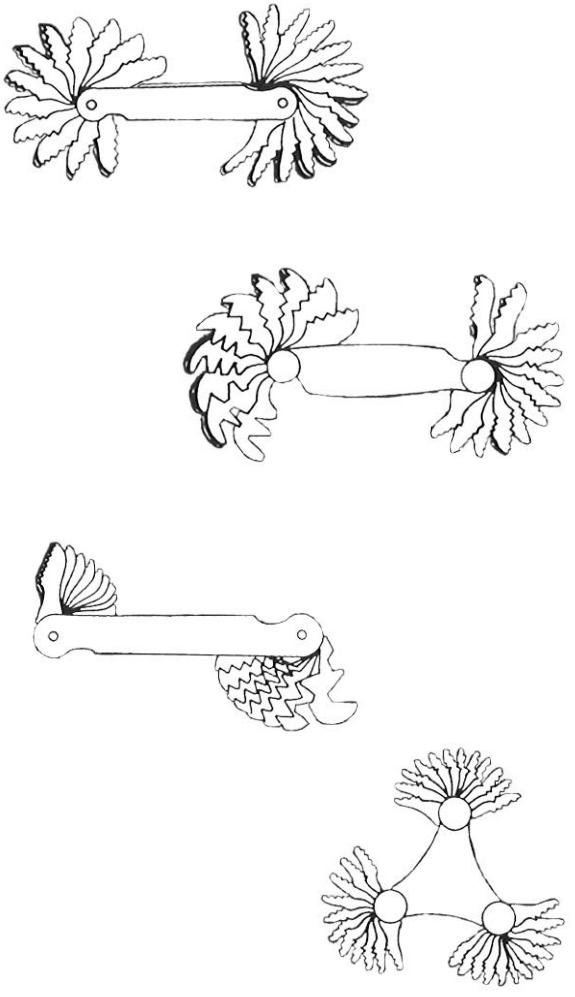

Screw pitch gages are made for checking the pitch of U.S. Standard, Metric, National Form, V-form, and Whitworth cut threads. These gages are grouped in a case or handle, as are the thickness gages. The number of threads per inch is stamped on each blade. Some types are equipped with blade locks. The triangular-shaped gage has 51 blades covering a wide range of pitches, including 11-1/2 and 27 threads-per-inch for V-form threads.

Screw pitch gages are used to determine the pitch of an unknown thread. The pitch of a screw thread is the distance between the center of one tooth to the center of the next tooth.

SMALL HOLE GAGE SET

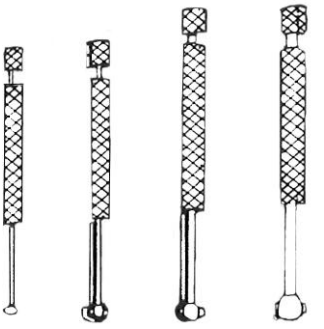

Small hole gages are adjustable, having a rounded measuring member. A knurled screw in the end of the handle is turned to expand the ball-shaped end in small holes and recesses. A micrometer caliper is used to measure the ball end. Maximum measuring capacity is 1/2 inch. This set of 4 or more gages is used to check dimensions of small holes, slots, grooves, and so forth from approximately 1/8 to 1/2 inch in diameter.

TELESCOPING GAGES

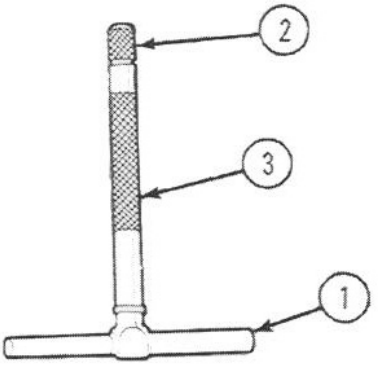

Telescoping gages are used to gage larger holes and to measure inside distances. These gages are equipped with a plunger (1) that can be locked in the measuring position by a knurled screw (2) in the end of the handle (3). Maximum measuring capacity is 6 inches. Measurements must be calipered on the gage by a micrometer, as in the case of the small hole gages.

They are also used when measurements cannot be taken with a standard micrometer. Telescoping gages are particularly adaptable for roughly bored work and odd sizes and shapes of holes. Compress the plungers and lock them by turning handle screw.

TYPES AND USES - Continued

THREAD CUTTING TOOL GAGES

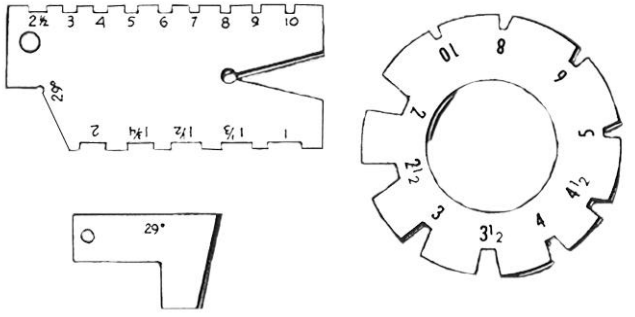

Thread cutting tool gages are hardened steel plates with cutouts around the perimeter. Each cutout is marked with a number that represents the number of threads per inch.

These gages provide a standard for thread cutting tools. They have an enclosed angle of 29 degrees and include a 29 degree setting tool. One gage furnishes the correct form for square threads and the other for Acme standard threads.

FILLET AND RADIUS GAGES

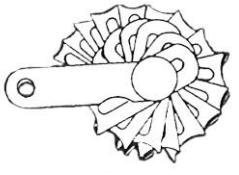

A

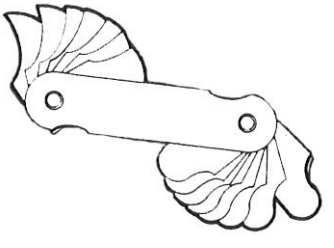

B

The blades of fillet and radius gages are made of hard-rolled steel. The double-ended blades of the gage have a lock which holds the blades in position. The inside and outside radii are on one blade on gage (A). The other gage (B) has separate blades for inside and outside measurements. Each blade of each gage is marked in 64ths. Each gage has 16 blades.

DRILL POINT GAGE

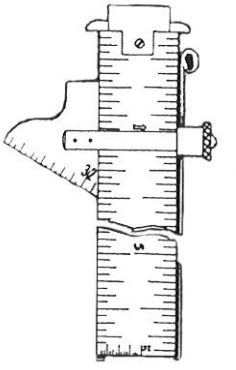

The drill point gage consists of a 6-inch hook rule with a 59 degree sliding head that slides up and down the rule. The sliding head can be locked at any position on the rule and is graduated in 1/32 inch. This gage is used to check the accuracy of drill cutting edges after grinding. It is also equipped with a 6-inch hook rule. This tool can be used as a drill point gage, hook rule, plain rule, and a slide caliper for taking outside measurements.

WIRE GAGES

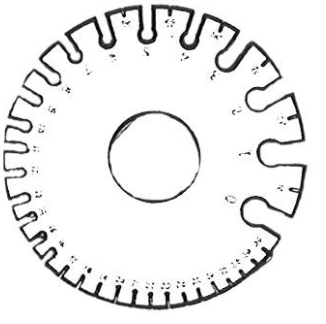

A wire gage is circular in shape with cutouts in the outside edge. Each cutout gages a different size wire, from 0 to 36 of the English Standard Wire Gage. A separate gage is used for American standard wire and another for U.S. Standard sheet and plate iron, and steel.

Similar gages are also used to check the size of hot and cold rolled steel, sheet and plate iron, and music wire.

TYPES AND USES - Continued

DRILL GAGES

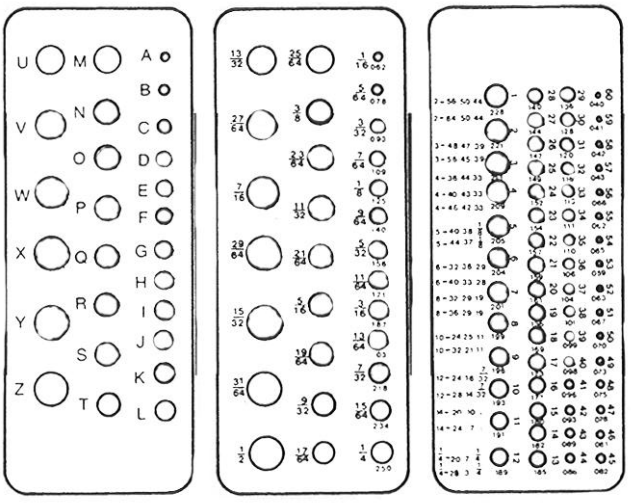

The twist drill and drill rod gage has a series of holes with size and decimal equivalents stamped adjacent to each hole. One gage measures drill sizes Nos. 1 to 60; the other gage measures drill sizes 1/16 to 1/2 inch in 1/64 inch intervals. Drill gages determine the size of a drill and indicate the correct size of drill to use for given tap size. Drill number and decimal size are also shown in this type gage. Letter size drill gages are also available. Each drill hole is identified by a letter instead of a number, decimal, or fraction.

MARKING GAGES

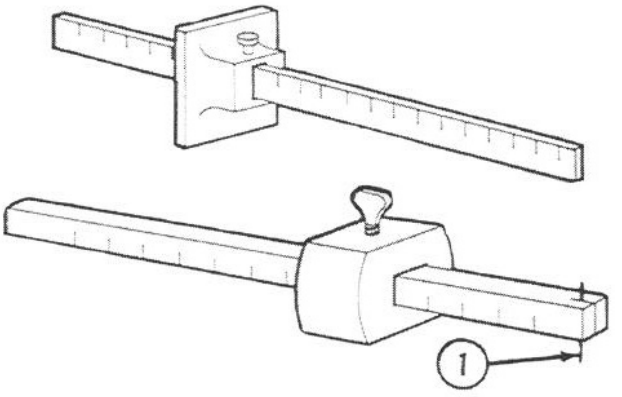

Marking gages are made of wood or steel. They consist of a graduated beam about 8 inches long on which a head slides. The head can be fastened at any point on the beam with a thumbscrew. The thumbscrew presses a brass shoe tightly against the beam and locks it firmly in position. A steel pin or spur (1) marks the wood and projects from the beam about 1/16 inch.

A marking gage is used to mark off guidelines parallel to an edge, end, or surface of a piece of wood. It has a sharp spur or pin which does the marking. A marking gage must be adjusted by setting the head the desired distance from the spur.

USING A THICKNESS GAGE

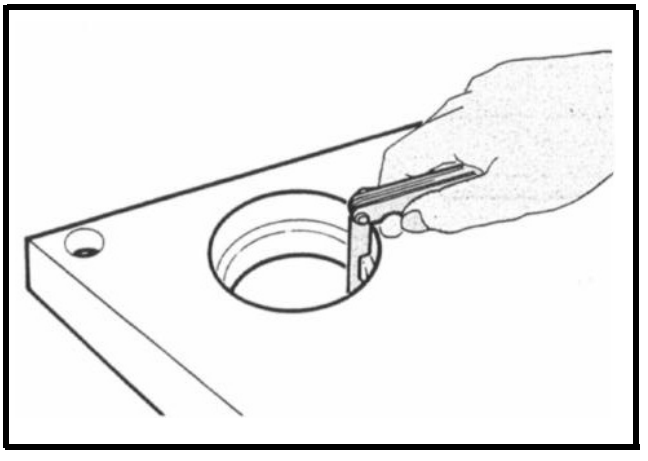

Thickness (feeler) gages are used in one of two ways: as a means for determining a measure or a means for adjusting to a definite limit. A thickness gage is used to check piston ring gap clearance in a cylinder bore.

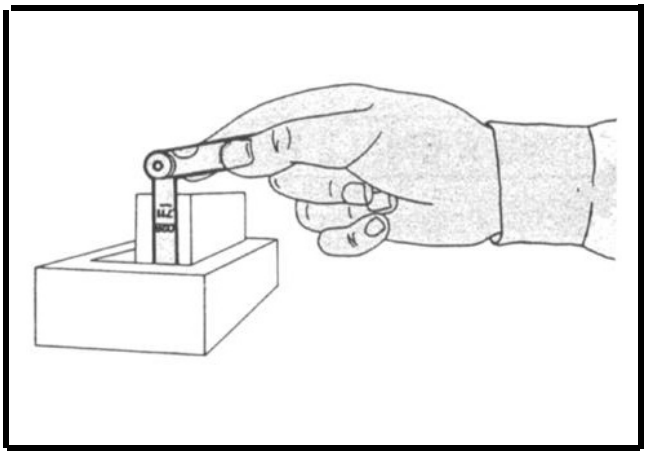

A long blade thickness gage is used to determine the fit between large mating surfaces. By combining blades it is possible to obtain a wide variation of thickness.

USING A CENTER GAGE

The center gage is used to set thread cutting tools. Four scales on the gage are used for determining the number of threads per inch. The gage is also used to check cut threads and the scales are used to measure threads per inch.

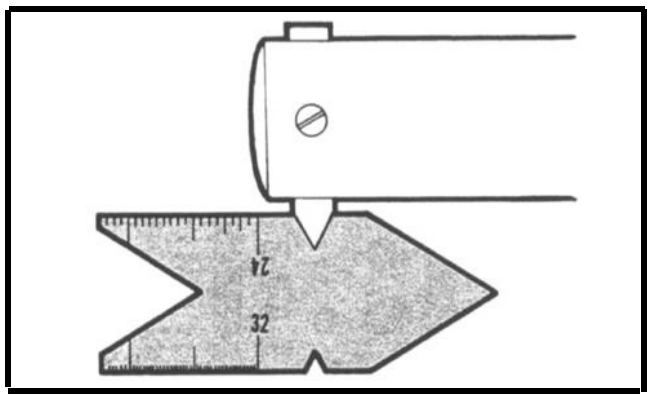

USING A SCREW PITCH GAGE

If the pitch of a thread is not known, it can be determined by comparing it with the standards on the various screw pitch gages.

1. Place a blade of a gage (1) over the threads (2) and check to see whether it meshes; if not, successively check each blade of the gage against the thread until it meshes.
2. The pitch can be read off the correct blade. The blades are made pointed so that they can be inserted in small nuts to check inside threads as well as outside threads.

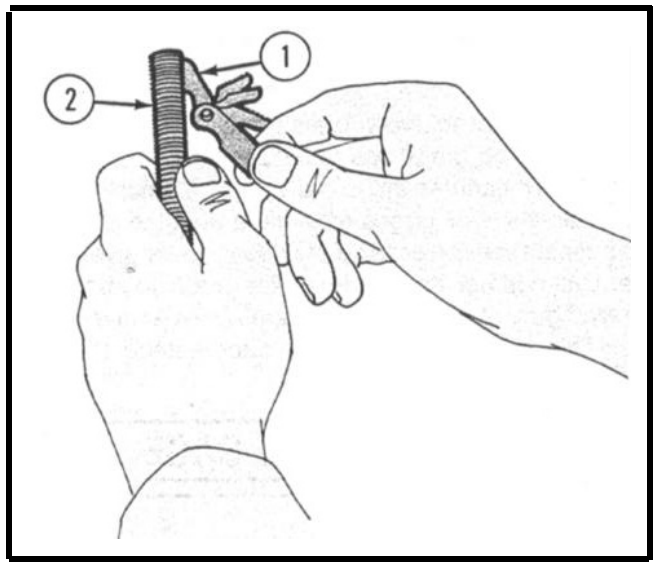

USING A SMALL HOLE GAGE

The small hole gages perform the same function as telescoping gages, except that they are used in smaller work.

1. Fit the ball-shaped point (1) into the hole or slot (2).
2. Expand the ball-shaped end by turning the screw (3) at the end of the handle.
3. Use micrometer to gage the measurement.

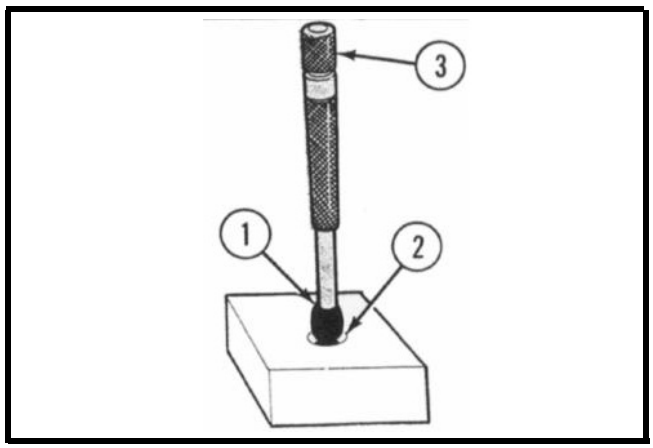

USING A TELESCOPING GAGE

1. Loosen the knurled nut (1) at the end of the handle (2).
2. Slightly tilt telescoping gage (3) 5 to 10 degrees and lower into object to be measured.
3. Tighten knurled nut (1).
4. Remove gage by pulling across center line as indicated by arrow.

NOTE

Take measurement only once. Repeated attempts will produce an inaccurate reading.

5. Measure gage setting with an outside micrometer. (To use an outside micrometer, refer to chapter 7 in this manual.)

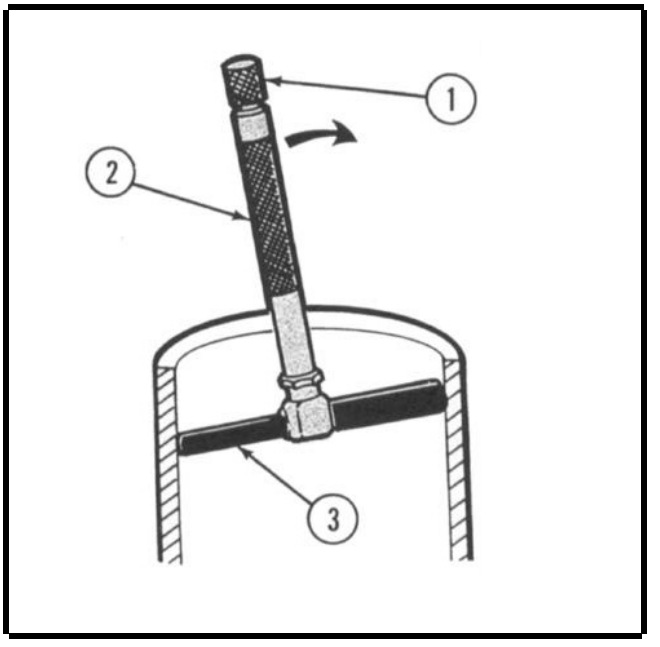

USING A THREAD CUTTING TOOL GAGE

1. Place the proper gage (1) over the tool (2). The tool must mesh properly with no light showing between the tool and the gage.
2. Use a 29 degree angle as a guide when grinding cutting tool.
3. After tool fits the angle, the point should be ground off to fit the proper place on the gage for the particular number of threads per inch to be cut.

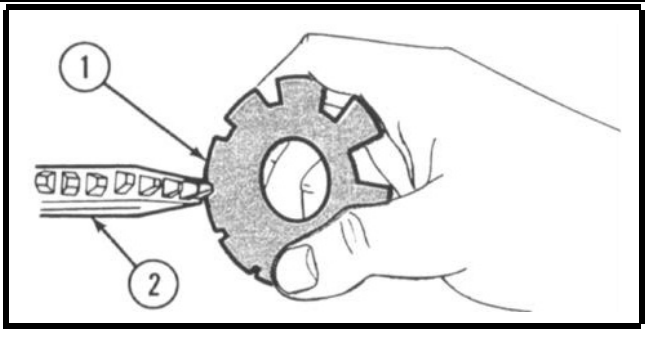

USING A FILLET AND RADIUS GAGE

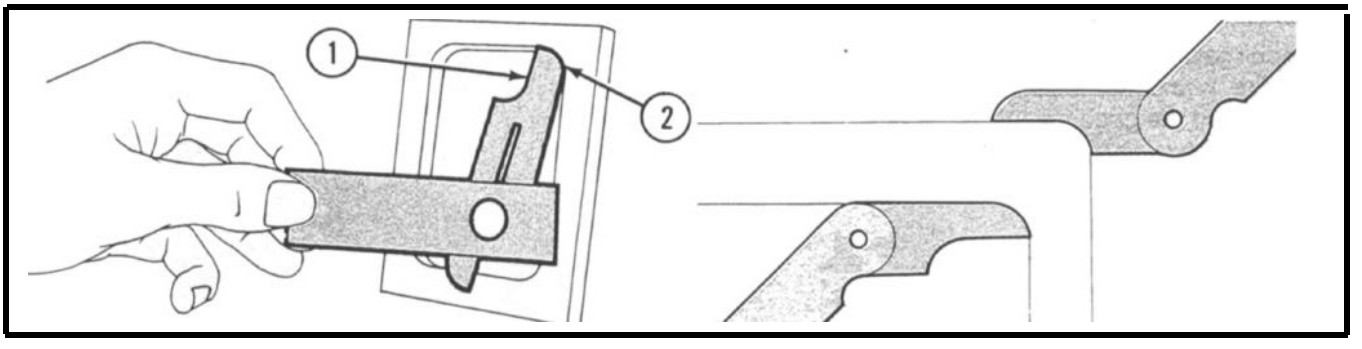

1. A double-ended radius gage blade (1) is used to check the inside corner or fillet (2) of a machined part. Each blade can be locked in position by tightening the clamp.
2. These gages can be used in any position and at any angle for both inside and outside radii.

USING A DRILL POINT GAGE

The method for sharpening the cutting edges of a drill is to do one lip at a time. Each lip must have the same length and have the same angle in relation to the axis of the drill. Set the sliding head securely on the rule at the mark equal to the length of the drill. Place the drill vertically against the rule so that the drill lip contacts the 59 degree angle of the sliding head. Hold up to light; correct angle is obtained when no light is seen between gage and drill.

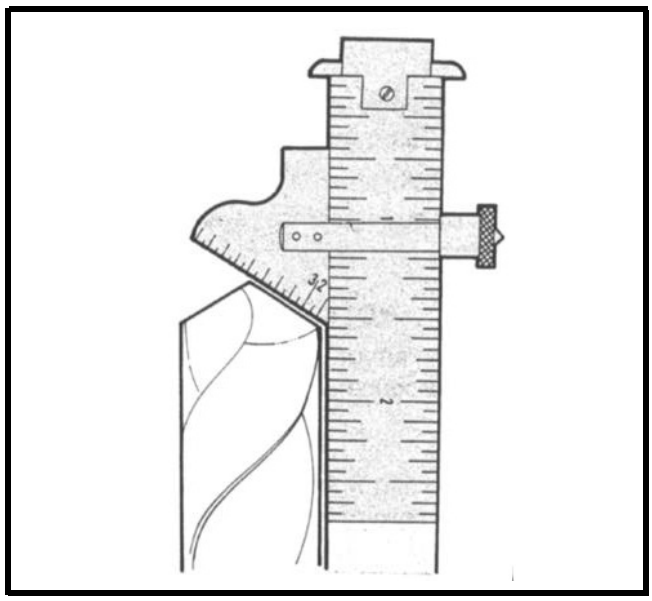

USING A WIRE GAGE

Determine the size of both sheet stock and wire by using a correct sheet and plate or wire gage.

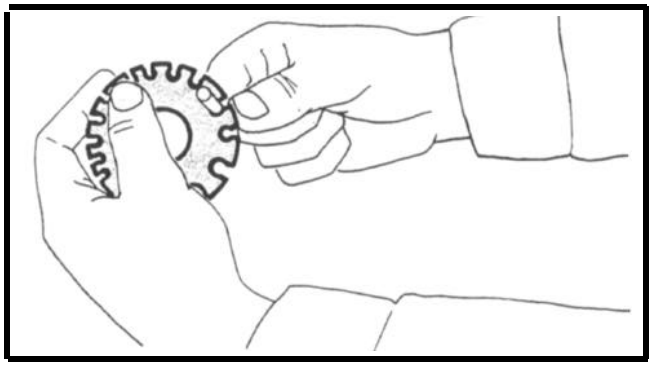

USING A DRILL GAGE

The drill gage is used to determine the size of a drill. The drill size, number and decimal size or letter size are stamped on the gage beside each hole. A chart on the gage indicates the correct size of drill to use for a given tap size.

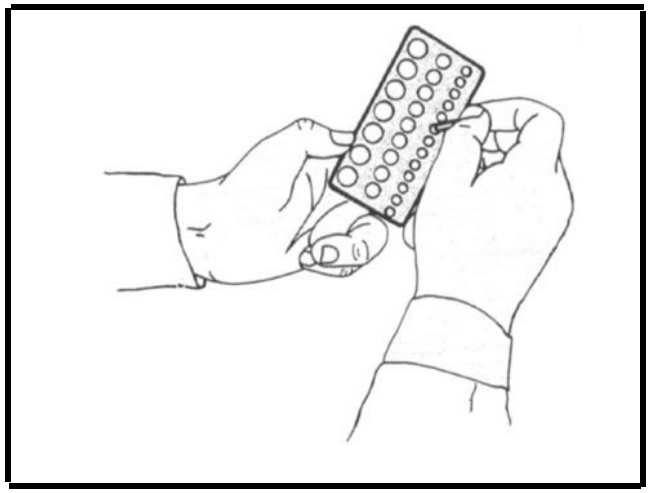

USING MARKING GAGES

Press the head (1) firmly against the edge of the work (2) to be marked. With a wrist motion, tip the gage forward until the spur touches the work. Push the gage along the edge to mark the work, keeping the head firmly against the work.

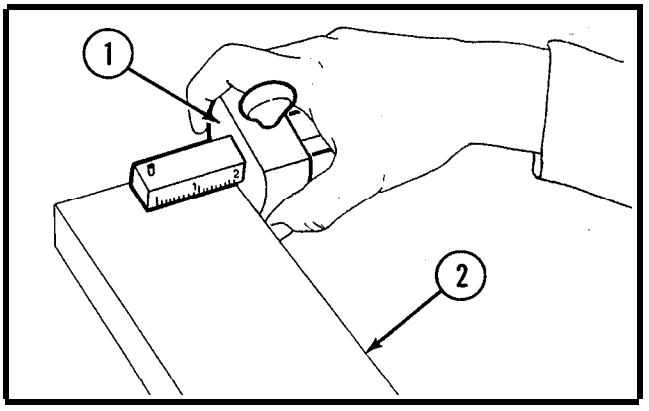

CARE OF GAGES

1. Exercise care when using thickness gages to measure clearance of knives and cutters on machines. Do not lower knife on thickness blade and then try to remove the gage. The blade may be shaved off if it is too tight. Never use gages for cleaning slots or holes. When blades are damaged or worn they should be replaced. Blades. in a case are removed by loosening the clamp and sliding out the damaged blade. Insert new blade and tighten clamp.
2. Always coat metal parts of all gages with a light film of oil when not in use to prevent rust. Store gages in separate containers. Do not pile gages on each other. Always return blades of leaf-type gages to case after use. Keep graduations and markings on all gages clean and legible. Do not drop any gage. Small scratches or nicks will result in inaccurate measurements.