CHAPTER 1

PERSONNEL PARACHUTE FAMILIARIZATION

Learning Objective: Upon completion of this chapter, you will be able to recognize and understand the history, components, and publications used to maintain personnel emergency parachute assemblies.

The word *parachute* is, in the modern sense, derived from the Italian word *parare,* meaning to protect or shield from, and the French word *chute,* meaning a fall or quick descent—literally, "to protect from a fall." As early as the year 1300, Chinese experimenters are reported to have jumped off the Great Wall with devices resembling umbrellas. In the year 1495, the great genius, artist, and inventor, Leonardo da Vinci, sketched a parachute design to be made of caulked linen that would permit a gentle descent to earth. About a century later, Fausto Veranzio described and sketched a parachute design consisting of a four-poled square frame covered with fabric, which he claimed could be used to escape from tall, burning buildings. Since man, not yet airborne, had no use for a lifesaving device of this nature at that time, parachutes were considered novelties or items of amusement, and interest in them gradually lessened. It was not until the invention of the first aerial balloon that interest in the parachute was renewed. As a result of the balloon, the parachute became less of a toy and more a means of escape.

In the late 1700's, the Montgolfier brothers had invented a balloon that would stay aloft. This balloon was kept in the air by burning bundles of straw beneath the bag to furnish the necessary supply of hot air. If the fabric caught fire, the flight was abruptly ended. This meant that those who went up on such flights had to have a means of escape. Those early days of ballooning saw excursions of curiosity into the use of parachutes by early balloonists such as the Montgolfiers, Blanchard, Martyn, Arnold, Appleby, Hampton, and others. Some parachute drops, using animals as passengers, were successfully made. The first human parachute descent was accomplished by the famous French balloonist Andre-Jacques Garnerin, on 22 October 1798. This historic event took place over Monceau Park, near Paris, when Garnerin released himself and his semirigid parachute from the balloon at an altitude of 6,000 feet.

On 14 July 1808, a famous Polish balloonist, Jodaki Kuparento, was the first man to have his life saved from a flaming bag of hot air when, over Warsaw, remnants of his burning balloon blew into the balloon's net structure and blossomed into a parachute, lowering him to the ground safely. However, the need for a foolproof parachute-whose main role at that time was its use as an added thrill to balloon ascensions-was not strong enough to stimulate a great deal of inventive effort until nearly 100 years later. Hence, with the coming of the air age in 1903, when the Wright brothers made their spectacular flight at Kitty Hawk, North Carolina, there came also an era of experimentation with parachutes designed for this new type of flying machine.

Albert Berry is credited with being the first person to successfully jump from an aircraft using a parachute. This jump was made on March 1, 1912, from a Benoist Pusher Biplane, at Jefferson Barracks, not far from Kinloch Park "Aerodrome," St. Louis. The parachute was an unbleached muslin cotton parachute, 36 feet in diameter. Its suspension lines terminated into a trapeze bar and strap arrangement. The parachute assembly was packed into a cone attached under the airplane. It was retained within the metal cone by a series of break cords. The weight of Berry's falling body pulled the canopy and lines from the container. Many others, using makeshift or experimental parachutes, made descents before World War I, but parachutes still were not considered essential equipment for military aviators. As World War I progressed, the resultant mortality rate among pilots was very high. However, the lives of over 800 balloonist

observers and artillery fire directors were saved by parachutes, demonstrating a desperate need for a foolproof and practical lifesaving device for aviators. The next step was to improve parachute reliability and make them mandatory for military fliers.

Parachute lore tells us that in 1917 a French pilot attacked a German Fokker and riddled it with bullets. The plane exploded in flames and began to plunge to earth. As the Frenchman circled his kill, he was surprised to see the enemy pilot jump, immediately followed by a ribbon of white swing out behind him as he fell through the clouds. Still amazed, he watched as a great billowing canopy fluttered and opened. The plummeting body slowed with a jerk and began swaying gently beneath the air-filled blossom. The adversary waved at the stunned victor and proceeded to swing into no man's land, where the reception was far from friendly. Twenty-seven rifle and machine gun bullets were pumped into the German's legs. He survived and gained the honor of being the first person to save his life by an emergency escape from an airplane.

Official documentation reveals that regular emergency bailouts were made during the late months of 1918 by German aviators. Captured equipment showed the parachute to be a unique one designed by Heineke. Gradually, German fighter pilots began to equip themselves with parachutes. Soon, whole squadrons were doing the same. At the end of the war, it was reported that all fliers in the entire German Air Force were in the process of wearing parachutes in flight.

All parachutes, however clever in design, were still dependent upon a static line attached to the aircraft to deploy the parachute, and they were far from perfect. Thus, some emergency escape attempts continued to take lives. Towards the end of 1918, with the war coming to a close, demands by the flying public and Congress finally resulted in the formation of a U.S. Air Service Parachute Board at McCook Field in Dayton, Ohio. Floyd Smith, with a reputation for his ideas in parachute design, was put in charge of this new unit of the Engineering Division. He surrounded himself with Guy M. Ball, James M. Russel, James J. Higgins, and Sgt. Ralph W. Bottreil. At the beginning of 1919, energetic Major E. L. Hoffman was chosen as military head of this parachute development team.

The "crash program" produced results. Parachutes from all over the world, all attached (static-line actuated) types, were tested and found to be unsafe and weak, and otherwise unsuitable for use in emergency jumps from airplanes. Initial testing on a new parachute design devised by Floyd Smith showed potential. This concept involved the use of a parachute canopy and lines packed into a container worn on a body harness, using a manually operated ripcord, yanked while falling freely through the air with no attachment to the aircraft, to open the parachute. Floyd Smith, with Guy Ball working closely at his side, worked together to perfect this new revolutionary parachute.

This parachute ultimately became the U.S. Air Service Airplane Parachute, type A. It had a 28-foot diameter silk canopy with silk suspension lines. The canopy was formed of 40 gores, with a novel shock-reducing vent design, and it was packed into a backpack container worn on the body of the flyer, by being attached to a webbing harness. A small pilot-chute was used to deploy the packed canopy and lines into the air when a pull on the ripcord opened the flaps on the back container being worn on the body. Not being dependent on any attachment to the aircraft for operation, it allowed the aviator to leave his disabled aircraft regardless of its position. It was capable of withstanding an opening shock delivered by 200 pounds falling at a speed of 400 miles per hour.

When Major Hoffman felt that it was time for the Model A parachute to be live-jumped, he chose a young, enthusiastic parachutist and designer named Leslie L. Irvin because of his vast experience as a parachute jumper. Irvin had responded to the government's call for a suitable parachute, and submitted a static-line operated parachute assembly with a cotton canopy. He was apprised that the submitted parachute was unsuitable because by that time the use of a silk canopy, as well as the ripcord concept, was considered preferable. Irvin continued to cooperate with the board by supplying parachute items. On April 28th, 1919, flying in a USD-9 airplane piloted by Floyd Smith at an altitude of 1,500 feet and airspeed of 80 miles per hour, Irvin jumped from its turret cockpit wearing a prototype Model A chute. He pulled the ripcord, the parachute opened in one and two-fifth seconds, and he became the first man to make a free-fall parachute jump from an aircraft.

The new parachute was the first step on the way to all modern personnel parachutes—emergency, military, and sporting. From this basic design came the seat pack, chest or reserve chutes, backpacks, and any other parachute that can be attached to a harness.

In October 1922, Lieutenant Harold Harris, U.S. Army, was dramatically saved from death by using a manually-operated parachute when his aircraft failed. By March 1924, it became mandatory for all Army and Navy aircrew to wear the standard back-type parachute while in flight. A sign in one of the parachute lofts read, "Don't forget your parachute. If you need it and you haven't got it, you'll never need it again."

With the requirement for all Navy aviators to wear parachutes, the necessity for trained personnel to pack and maintain these parachutes became apparent. In June 1922, the Bureau of Aeronautics requested volunteers from among the petty officers attached to the various naval air stations to take a course of instruction in parachutes at the Army School at Chanute Field, Rantoul, Illinois. Thirteen chief petty officers were selected from throughout the Navy. They completed the course of instruction and returned to their duty stations. Three of them were selected for further training at McCook Field, Dayton, Ohio, at that time the Army Equipment Experimental Depot. The three chief petty officers received advanced training in parachutes. In August 1923, Chief Alva Starr and Chief Lyman Ford, two of the three, were ordered to Lakehurst, New Jersey, to set up a training course on parachutes. Although the course was established, the PR rate was not established until 1942. In September 1924, class No. 1 was convened at the Parachute Material School at Lakehurst to teach parachute rigging.

Although his name is now lost to history, one of the farsighted founders of the PR school decided on a novel means to help combat the airmen's reluctance to "hit the silk." He reasoned that if it became known that the men who packed and repaired the parachutes had enough confidence in their ability and equipment to make a deliberate, premeditated jump, the aviator might be more willing to take a chance on his parachute than to crash in his airplane. In the beginning, graduate trainees jumped from the outer wing tips of a biplane flying high above the naval air station at Lakehurst. Later, the students "let go" from short rope ladders suspended from the sides of the old gondola airships (blimps), and later still, from training and patrol type lighter-than-air ships. Since the beginning of the PR school in 1924, there have been over 72,000 parachute jumps made at Lakehurst, New Jersey.

With the coming of the jet age, the emergency use of parachutes has become a highly technical sequence; that is, events in time order. Today's emergency sequence for ejecting from a disabled aircraft starts with the aircrewman making a decision to leave the aircraft. After making that decision everything is done automatically, as you will see in the ejection sequence for the A-6 aircraft, shown in figure 1-1. This is only one of

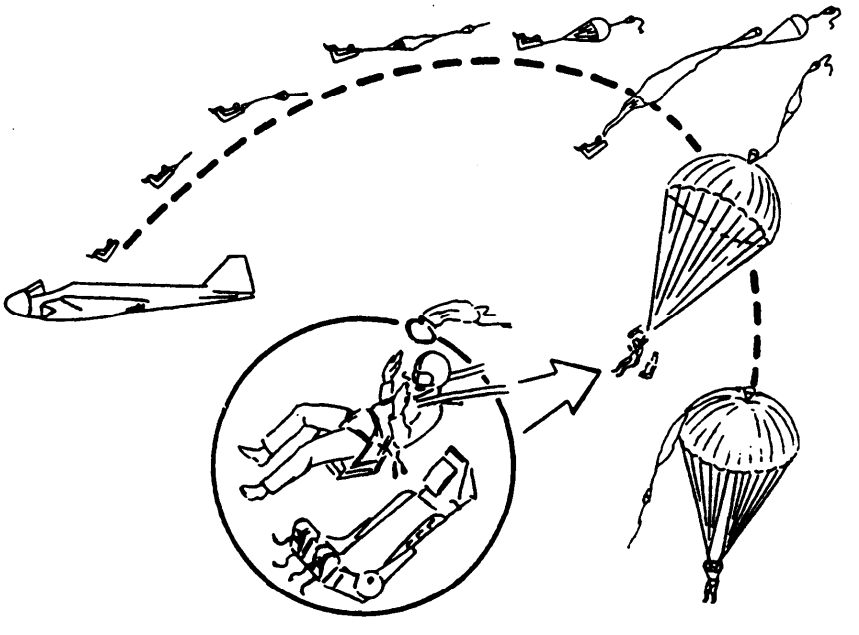

219.267

Figure 1-1.—Ejection sequence.

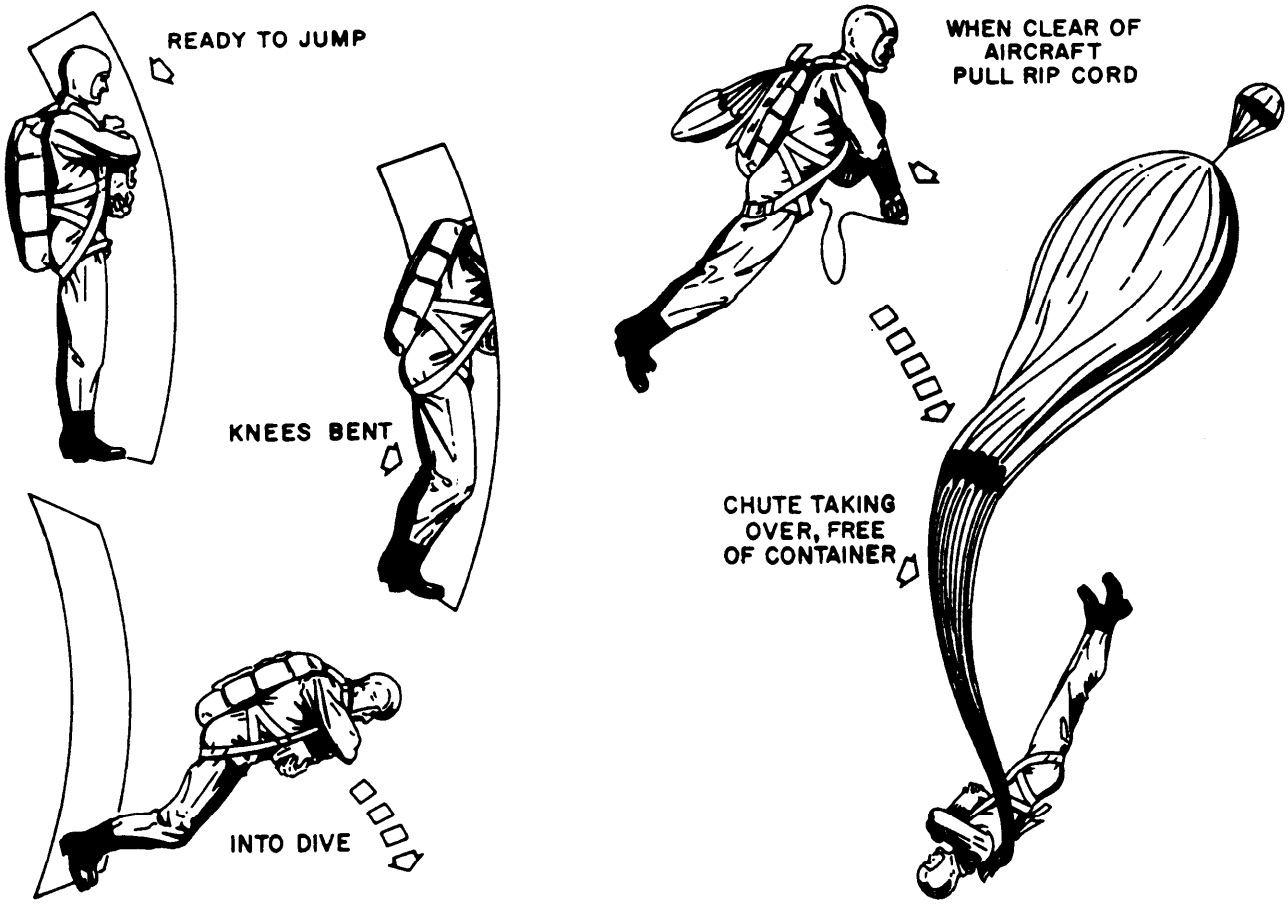

239.110

Figure 1-2.—Aircraft egress, pilot chute deployed, and main canopy free of container.

several types of ejection systems used in modern naval aircraft. For example, the ejection sequence of the Mk GRU-7 is as follows:

1. Initial ejection.
2. Drogue gun fires.
3. Controller drogue deploys.
4. Stabilizer drogue deploys.
5. Main parachute deploys and a normal parachute descent is made.

From the experimental devices of the early Chinese through the seat ejection systems of today, you can view the evolution of the parachute. If you consider this development as a window through which you can see solutions to the escape problems of the fliers of the space shuttle or other advanced craft, then this history is just the end of the beginning.

A parachute appears somewhat similar to a giant umbrella. By offering a large air-resisting or drag surface, the parachute, when opened, provides the deceleration necessary to allow for the safe descent of an aircrewman. In each parachute jump a sequence of events, shown in figure 1-2, takes place. After the parachutist clears the aircraft, he pulls the ripcord. The ripcord pins are removed from the locking cones, permitting the grommets to separate from the locking cones. The container spring opening bands pull the side and end flaps apart allowing the pilot chute to spring beyond the negative pressure area immediately above the falling body. This results in its getting a better "bite" on the surrounding air, thus speeding the opening of the canopy.

The aircrewman falling away from the pilot parachute causes the main canopy to be pulled from the container assembly, followed by the suspension lines. The canopy begins to fill with air during this operation.

The ties on the risers break as the load is applied. The lift webs are then pulled from the container while the canopy fully opens; at this point the parachutist receives the opening shock as

the parachute fills with air. The aircrewman then hangs or sits suspended in the harness during the descent.

There are many different types of parachutes used in today's naval aircraft. To really understand the operating principles of a parachute, you should first know the basic design and construction of a parachute and its components.

COMPONENTS OF PARACHUTES

The design and construction of a parachute and its components are based on the old idea that a chain is only as strong as its weakest link. Every component, or link from the jumper to the canopy must carry its share of the maximum load that is applied during the opening shock.

The five major parts of a standard service parachute, starting at the top and working down, are the pilot chute, main canopy, suspension lines, harness, and pack. These five major parts are shown in figure 1-3.

PILOT CHUTE

The pilot chute has the job of anchoring itself in the airstream, then pulling the remaining packed components out of the parachute pack. The order of deployment for most parachute

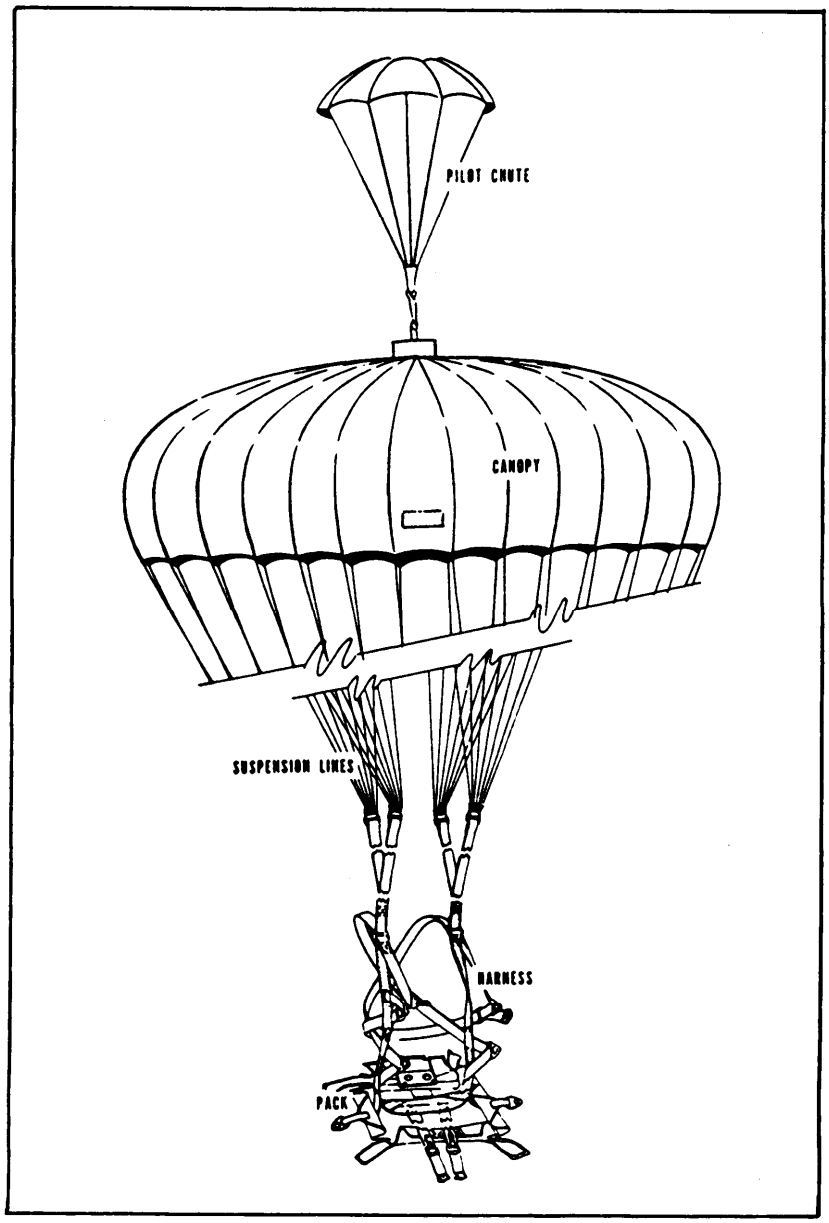

239.120

Figure 1-3.—The five major parts of a parachute.

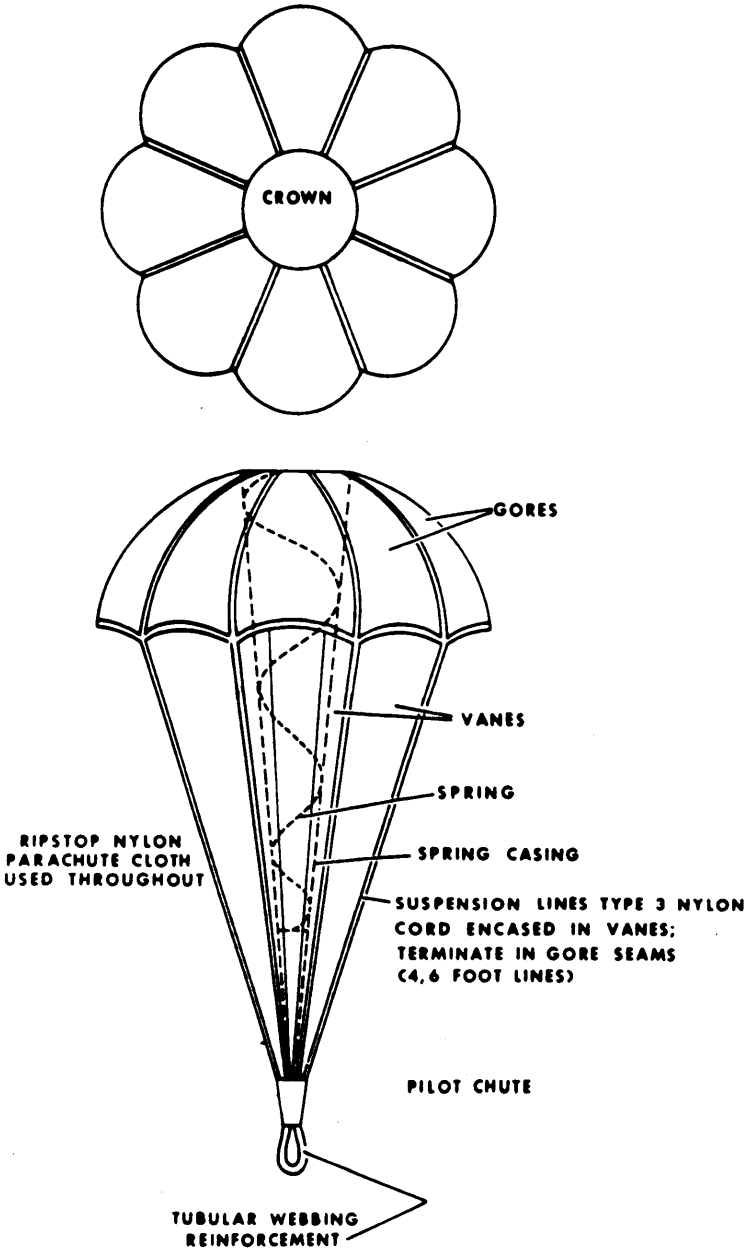

239.121

Figure 1-4.—Pilot chute.

assemblies is the pilot chute, the canopy, the suspension lines, and the risers. A typical pilot chute is shown in figure 1-4.

CANOPIES

Five sizes of canopies are used in naval aviation. They are the 35-foot, 28-foot, 26-foot, 24-foot, and 17-foot sizes. The 28-foot canopy is the size dealt with in this chapter and is most commonly described as a polygon, having 28 sides, and a diameter of 28 feet plus or minus 1 inch. The 28-foot canopy contains approximately 796 square feet of nylon cloth, plus 2,400 yards of nylon thread. The sewing on a parachute varies from 8 to 10 stitches per inch. The cloth that is used in the construction of a parachute canopy is high-tensile strength, 1.1 ounce ripstop nylon. Ripstop nylon cloth must meet the following minimum requirements: tensile strength—42

pounds per square inch; tear strength —5 pounds; air permeability —80 to 100 cubic feet per minute. Tensile strength is the greatest stress cloth can withstand along its length without rupturing, expressed as the number of pounds per square inch. Tear strength is the average force, expressed in pounds, required to continue a tear across either the filling or the warp of the cloth. Air permeability is the measured amount, in cubic feet, of the flow of air through a square foot of cloth in 1 minute under a specific pressure.

The suspension lines are sewn into the canopy. These lines run continuously from the connector link on one side, through the canopy, and to the connector link on the other side (fig. 1-5). The material between any two suspension lines is called a gore. There are 28 gores in a 28-foot canopy. Each gore is composed of four sections identified

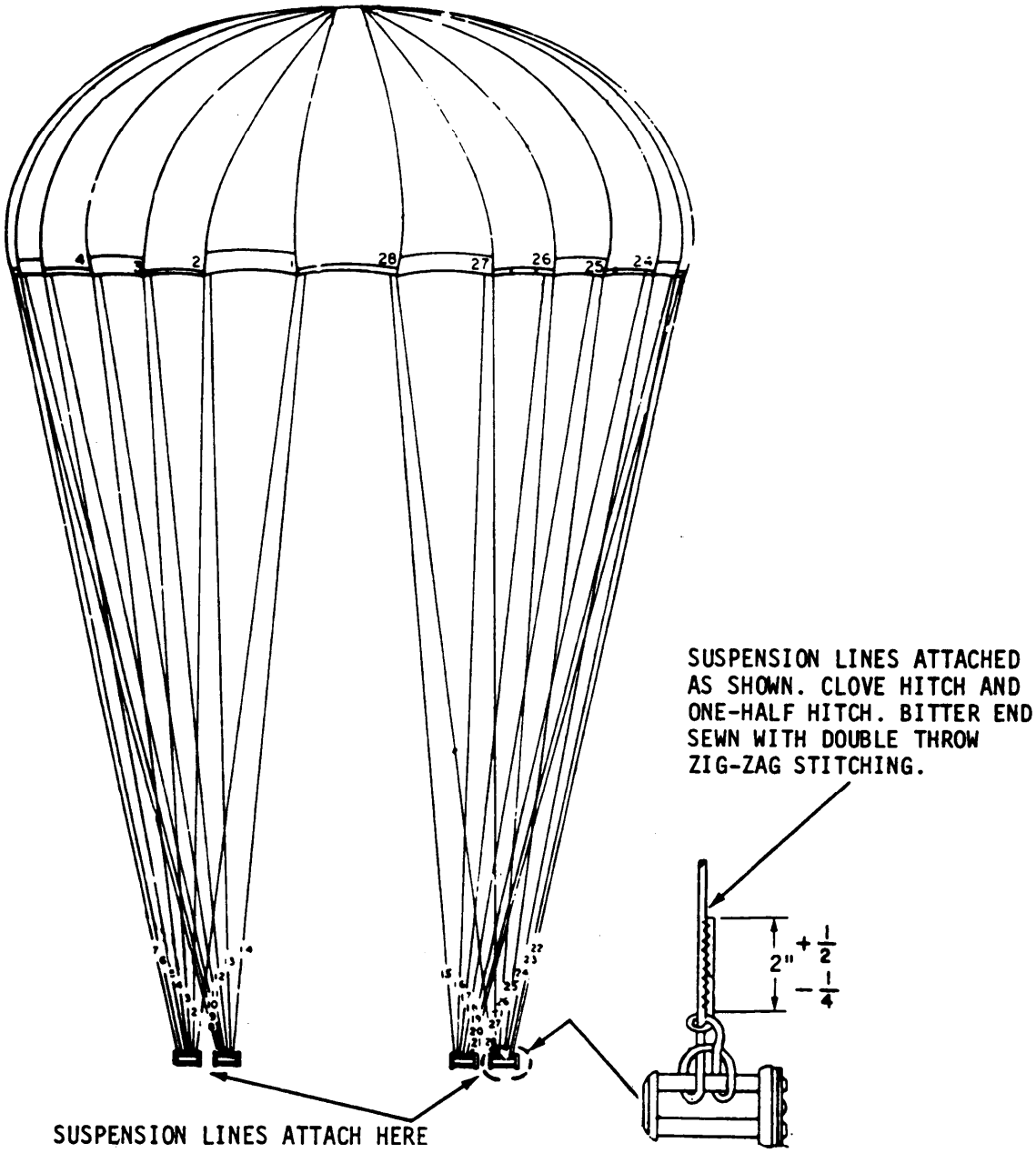

239.463

Figure 1-5.—Suspension lines on 28-foot canopy.

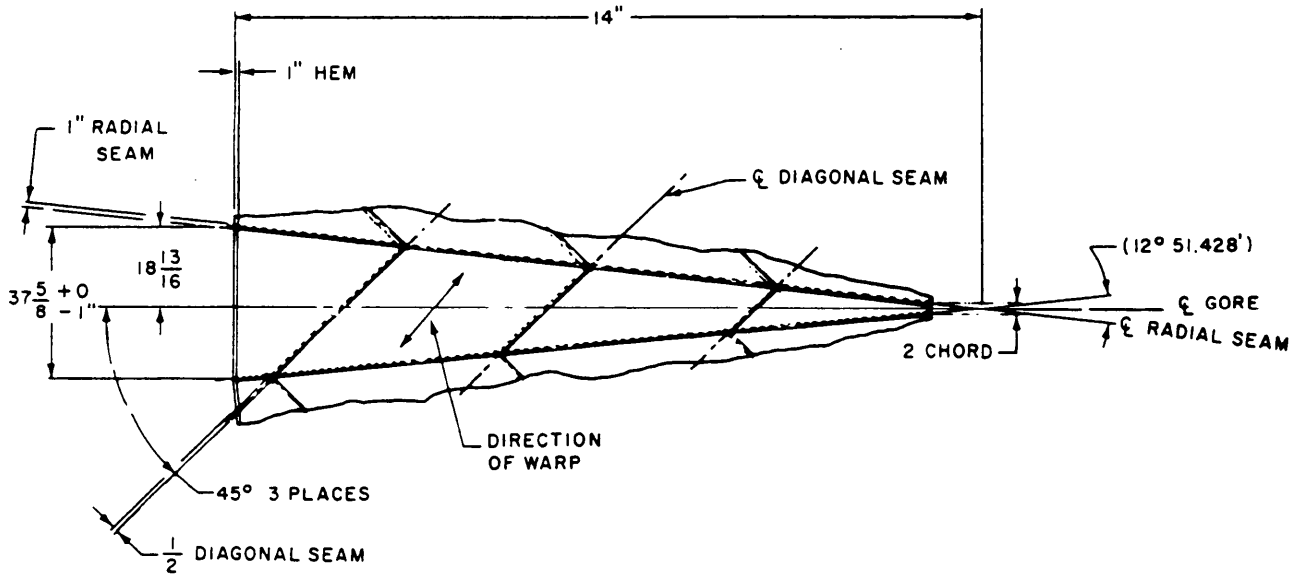

239.123.1

Figure 1-6.-Close-up view of a gore.

by the letters A, B, C, and D (fig. 1-6), starting with the bottom section. Figure 1-7 is a flat view of the entire canopy, and the note in the figure shows the relationship of the gore in figure 1-6 to the rest of the canopy.

Most woven cloth has two types of threads—warp and filling. These two types are identified by their relationship to the selvage edge. A selvage edge is a finished edge on two sides of a piece of fabric to prevent raveling. This finished edge sometimes has a narrow border of different threads or sometimes it may have a different weave. Warp thread runs parallel to the selvage edge of cloth and runs lengthwise down a roll of fabric. Filling thread runs perpendicular to the selvage edge or crosswise across the width of the cloth.

The sections used in a parachute canopy are cut at a 45-degree angle to the centerline of the gore. This is called a bias construction and provides the maximum strength and elasticity. The radial and diagonal seams are double lapped for security. The suspension lines are enclosed in the channel produced by stitching the radial seams. Figure 1-7 shows a flat view of this bias construction of the 28-gore canopy. Stenciled on the top center gore (section A of gore 28) in letters one-half inch high and about 12 inches from the bottom of the canopy are the NAVAIRFAC order number, date of manufacture, serial number, and the manufacturer's mark or trademark. Stenciled on the diametrically opposite gore (section A of gore 14) is the date of manufacture and serial number.

If you should have to add markings to the canopy, the marking fluid you use should be in accordance with Specification MIL-I-6903A, Amendment No. 1.

Note the vent pictured in figure 1-8. This vent acts as a relief valve and relieves the high internal pressure within the parachute at the instant of opening. Without this vent, an opening at high speed could result in a dangerous rupture of the canopy. The skirt (not shown) and vent hems are reinforced with 1-inch tubular nylon webbing with a tensile strength (T/S) of 4,000 pounds, to aid in preventing tears from completely separating the canopy.

All machine stitching, except zigzag, should conform to Type 301, Federal Standard 751, and should be not less than 8 nor more than 10 stitches per inch. Ends of all tape, webbing, and lines must be seared to prevent fraying. No waxes should be used. For sewing diagonal seams, either size B or E nylon thread may be used. Use size E thread for all other seams, zigzag stitching, and repairs.

Removable connector links provide a quick attachment for the canopy and suspension lines to the lift webs.

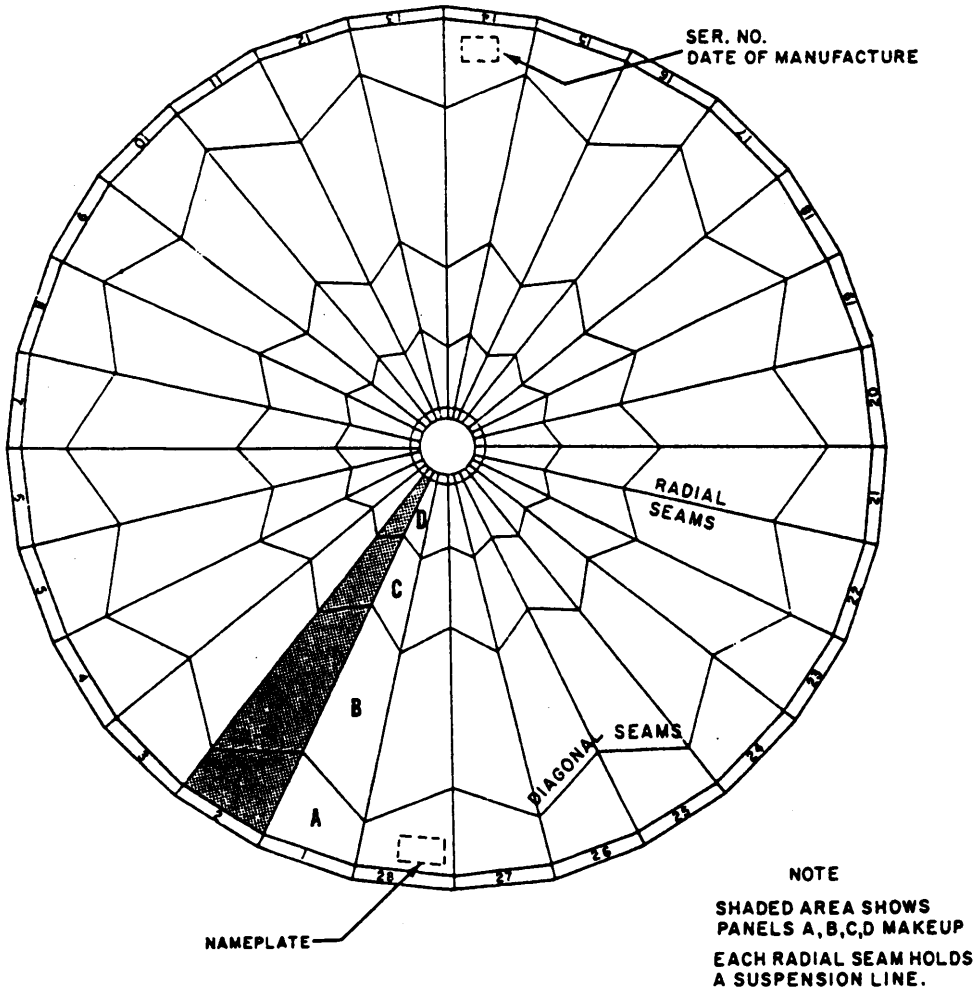

239.464

Figure 1-7.—Flat view showing bias construction on a 28-foot canopy.

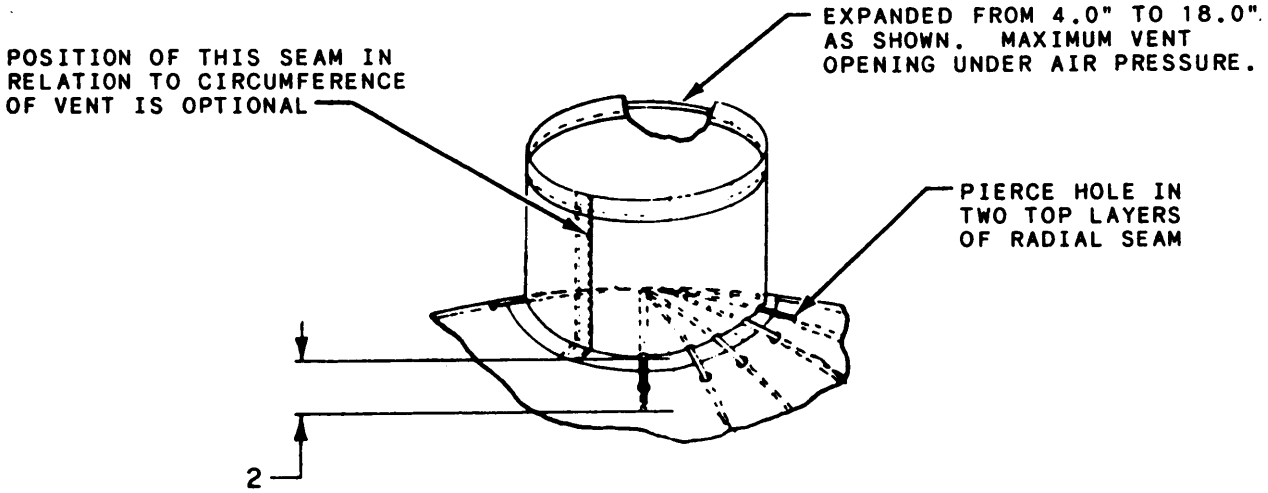

239.465

Figure 1-8.—Vent.

NOTE: To determine the service life of a parachute component, refer to the Maintenance Requirement Cards, NAVAIR 13-600-4-6-3.

SUSPENSION LINES

The suspension lines form a net or skeleton for the canopy and absorb much of the shock load. Therefore, when being assembled, they must be placed under a 20-pound tension, marked, and cut as a group to assure equal distribution of the shock load. The 28 suspension lines counted at the links are actually 14 lines, 75 feet 4 inches in length. These lines run continuously from link to link; that is, each line is secured to a connector link on one side of the canopy, runs up and over the canopy, and down to a link on the opposite side.

Type III nylon suspension line (with a minimum tensile strength of 550 pounds) is used on all main canopies and vane-type pilot chutes. This line consists of a loosely woven outer covering called a sleeve, and several strong inner cords called the core. This core provides the greater portion of the strength of the suspension line.

The suspension lines are attached to the connector links by tying a clove hitch, then a half-hitch, and completing the attachment with 2 (±1/2 or – 1/4) inches of zigzag stitching. These lines are attached to the lift webs with removable connector links. One of the four removable connector links is shown in figure 1-9. See the four links (the ends of the suspension lines without the lift webs) in figure 1-5.

To prevent the canopy on the 28-foot parachute from slipping along the suspension lines, each line is anchored by zigzag stitching at several points to the radial seams through which it passes. One-half inch of slack is allowed in the vicinity of the skirt between the zigzag sewing points to relieve the strain during opening shock.

PARACHUTE CONTAINERS

The parachute container is designed to house and protect the pilot chute, main canopy, and suspension lines. There are as many different styles of containers as there are parachutes. They all have the same basic opening procedures. There are four flaps: top, bottom, left, and right. These flaps are held closed by two or four ripcord pins inserted through locking cones. To open the parachute container, the ripcord pins must be removed either manually or automatically. This allows the flaps to open and the pilot chute to spring from the pack. The pilot chute then pulls the canopy out.

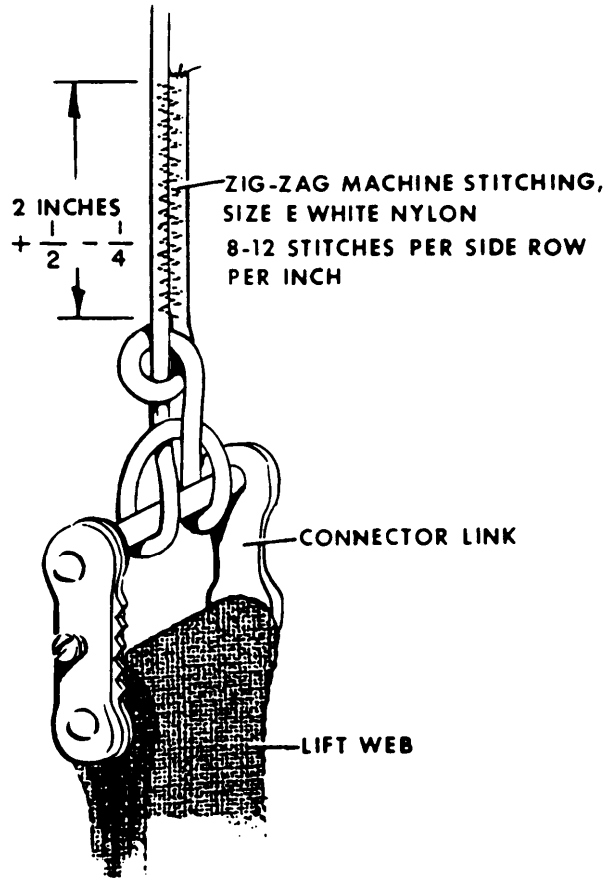

239.126

Figure 1-9.—Method of attaching suspension lines at the link.

PARACHUTE HARNESS

The harness is the part of the parachute that holds the parachute to the wearer. It is designed to absorb the largest part of the opening shock, with chest, leg, and back straps added to prevent the jumper from falling free from the chute on the way down. Personnel parachute harnesses are made of 1 3/4-inch-wide nylon webbing, which has a tensile strength from 6,000 to 8,700 pounds.

The Navy uses two types of harnesses. The first is the quick-fit harness. It is made in three configurations: seat-type, back-type, and chest-type. The other type of harness is the integrated torso harness. It combines the harness, lap belt, and shoulder harness into one integrated garment. This harness improves the individual's comfort and mobility; it is more secure and is easier to put on and take off. It also reduces the number of exposed straps and overall bulk and weight.

RIPCORDS

The ripcord is a manual releasing device used to allow the container to open. It consists of locking pins securely attached to a length of 3/32-inch diameter corrosion-resistant steel cable. The ripcord handles are made of steel tubing in the shape of a cloverleaf or a trapezoid, and they are attached by passing the cable through a small hole drilled in the grip and then swaging a retaining ball or clamping a small sleeve onto the loose end of the cable. The pins are swaged in place and tested to withstand a pull of 300 pounds.

HARNESS HARDWARE

Parachute harness fittings (hardware) are small metal devices usually made of cadmium or chrome-plated steel. They are designed to join the parachute and harness and to afford easy and rapid adjustment of the harness to the wearer.

The many types of parachute harness fittings include adapters, snaps, D-rings, V-rings, connector links, and Koch release adapters. Some of the more common types of these fittings and their tensile strengths are illustrated in figure 1-10.

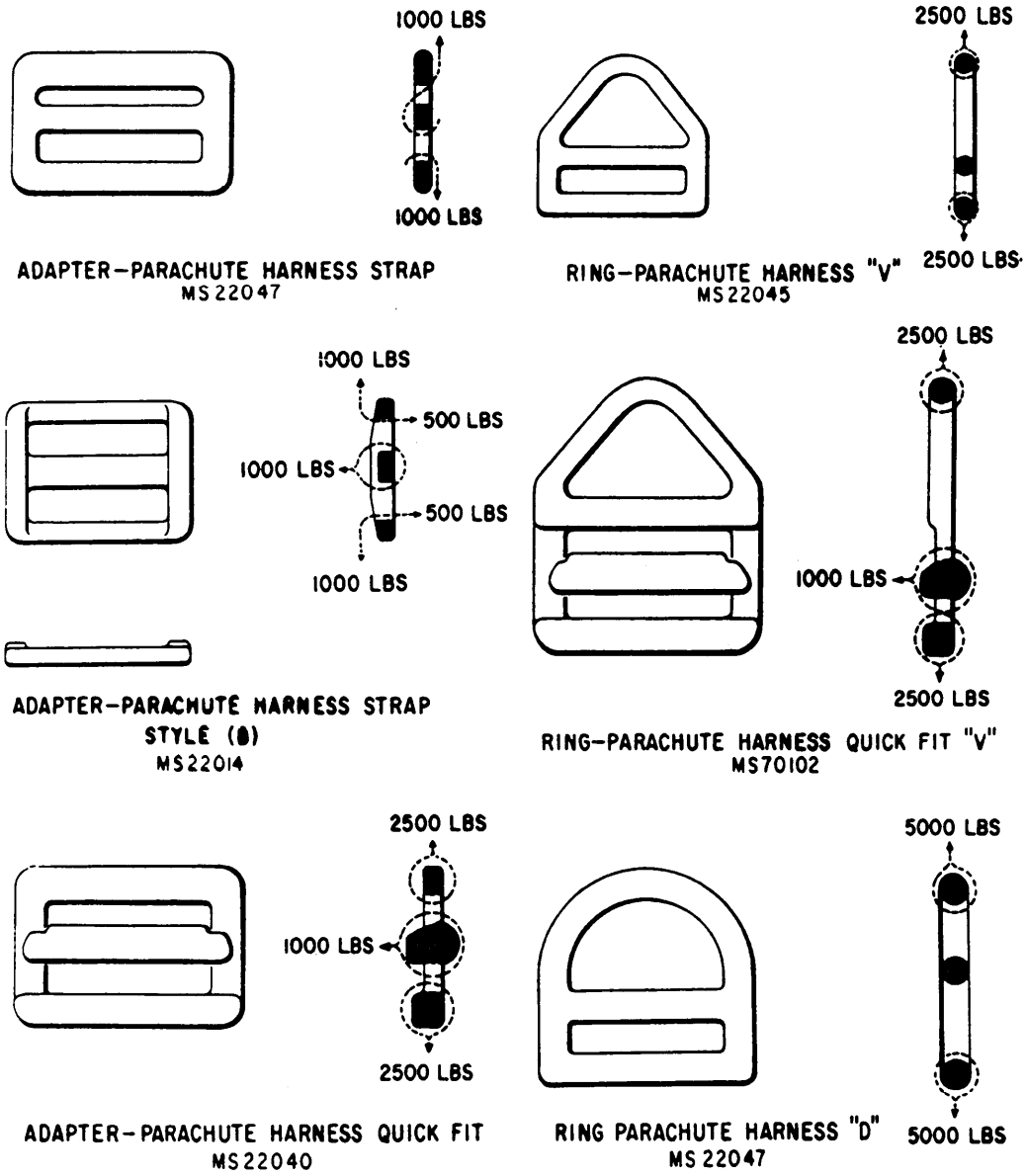

239.136

Figure 1-10.—Harness hardware (page 1).

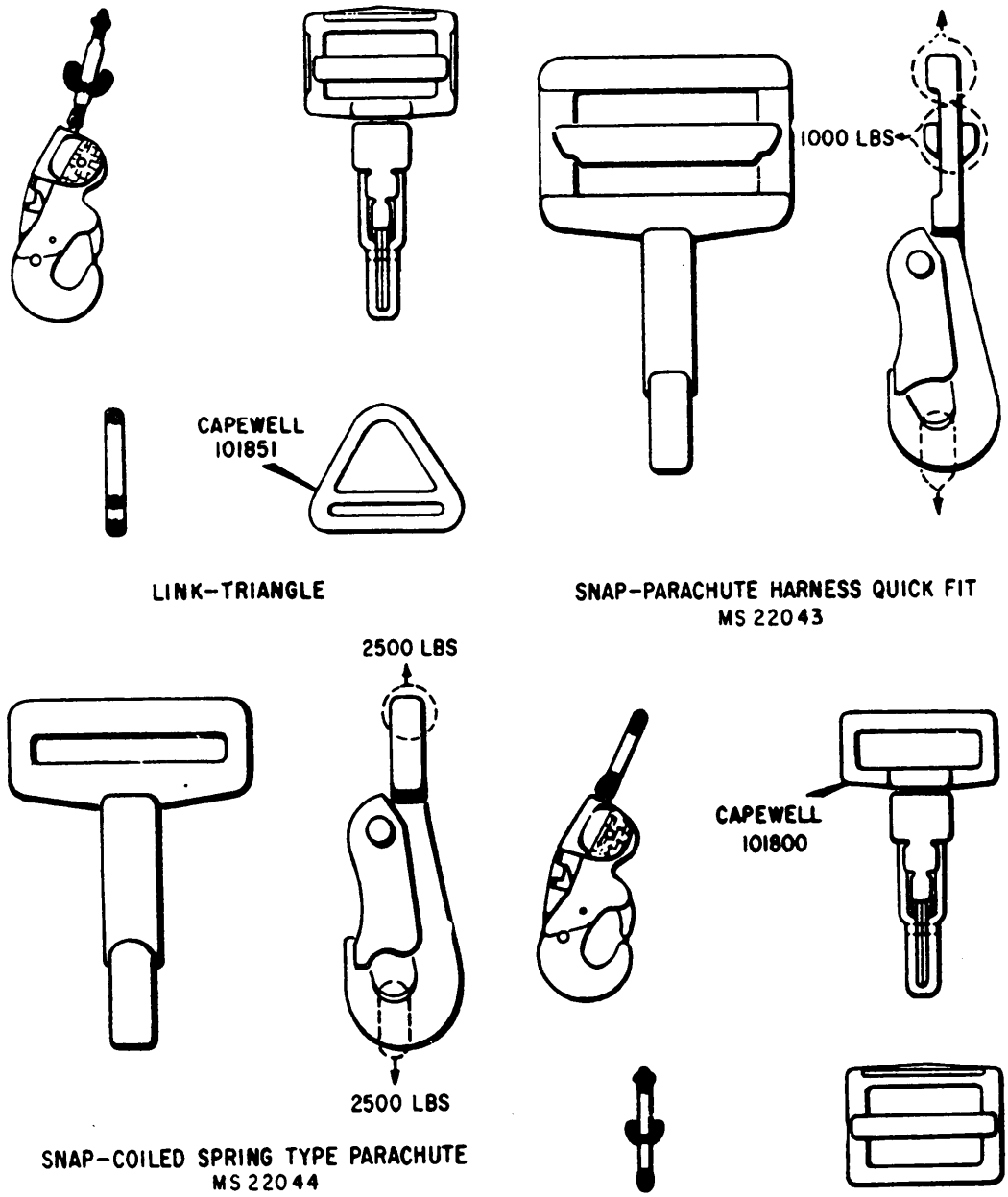

239.137

Figure 1-10.—Harness hardware (page 2).

ADAPTERS

Two types of adapters are used with a regular quick-fit type harness. They are the regular harness adapter and the friction adapter. The harness adjuster adapter is used to adjust the harness to the wearer, and the friction quick-fit adapter has a grip slide bar, which allows the wearer to make quick adjustments to the harness.

SNAPS

There are several types of snaps used with parachutes. They are the plain harness snap, the quick-fit snap, and the quick-connector snap. The harness snap is a plain hook-shaped, spring-actuated guard, which snaps over a V-ring to secure two parts of the harness together. The quick-fit snap is similar except that it has a grip slide bar. The quick-connector snap is similar to

the harness snap and is used as a means to quickly attach the Navy chest-type parachute to the two D-rings on the Navy chest-type harness.

CONNECTOR LINKS

Connector links are fittings designed to join the parachute to the harness. The suspension lines are attached to one side and the harness to the other connector links.

KOCH RELEASE ADAPTERS

Integrated torso suit harnesses are equipped with four Koch release adapters, which attach to the fittings on the lap belts and risers of the integrated parachute assembly. Release fitting adapters are manufactured in two parts-male and female.

The male portion of the adapter is attached to the torso suit harness, while the female portion is attached to the riser assembly of the parachute. Figure 1-11 shows the Koch parachute release adapters.

NOTE: Aircrew Systems Change 446 incorporates the "parachute harness sensing release unit," commonly referred to as SEAWARS. SEAWARS is designed to automatically release the parachute risers upon immersion in seawater.

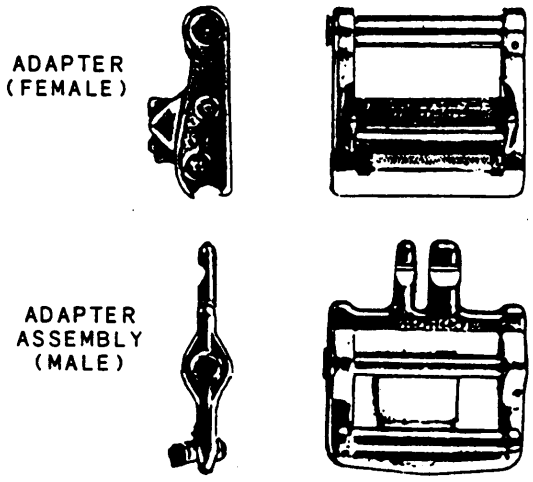

239.138

Figure 1-11.—Koch release adapters.

TRANSPORTING PARACHUTES

When issuing parachutes you may need to give some instructions to the aircrewmen on proper ways to carry and handle them. The most effective way to explain the proper handling of packed parachutes is to list a series of DO's and DON'T's.

1. DO NOT pick up a parachute by its risers or ripcord. Lift web tackings break relatively easily, and when they do, the suspension lines are almost certain to become disarranged.

2. DO NOT allow a parachute to come in contact with light fixtures or heat sources. Heat tends to decompose the fabric.

3. DO take EVERY precaution to prevent soiling or contaminating parachute assemblies.

4. DO NOT stack parachute assemblies on top of each other or on the floor, unless they are in suitable shipping containers.

5. DO NOT leave a parachute where heavy objects can be dropped or placed on it. Permitting a parachute to be carried in a cargo net along with squadron cruise boxes or similar gear is an example of poor handling techniques.

6. DO use utmost CAUTION when handling parachute assemblies with installed cartridge-activated devices.

7. DO NOT tack or tie a container with the parachute in the packed condition.

8. DO clean thoroughly vehicles used to transport parachute assemblies. DO check for contamination and provide with suitable covers during inclement weather.

SHIPPING CONTAINERS

Parachutes are shipped and/or stored in sealed shipping containers of either cardboard or metal construction and of suitable size. The containers are designed for reuse, and they must be opened and closed with care.

When you are using the container to return parachutes to supply or to transfer the assembly to another activity, ensure that th eold tags and labels on the container are removed or marked out. Ensure that the proper tags and labels are attached and properly filled out on the transferring container. Tags and labels are shown in figure 1-12.

STORING

To place a parachute assembly into temporary storage, proceed as follows:

NOTE: This procedure is for parachute assemblies that are in a ready-for-issue (RFI) status only.

1. Inspect the parachute assembly, ensuring that it is in an RFI status. Check the nameplate information with the recorded information on the parachute history card. Fill out an Aircraft Equipment Condition Tag, indicating the assembly name, serial number, and part number.
2. Remove and disarm the automatic actuator. (This is an explosive device used to automatically pull the ripcord on certain parachutes.)
3. Remove cartridges from all other cartridge-actuated devices (these are other explosive devices used to assist in opening certain types of parachute canopies). Store the cartridges from explosive devices in accordance with existing instructions.
4. Release all snap fasteners, open all slide fasteners, and remove one end of each of the parachute container spring opening bands.
5. Chain the parachute suspension lines.
6. Remove the manual ripcord cable assembly and place it in a small paper or plastic bag.
7. Examine the shipping container for condition. Remove or mark out all old tags or labels on the container.
8. Place the ripcord assembly in a side pocket of the parachute bag or at the bottom of the container. Spread one-eighth pound of naphthalene flakes on top of the parachute container. Insert the suspension lines loosely and fold in the canopy; then sprinkle one-fourth pound of naphthalene flakes into the canopy fold. Lay the pilot parachute into the shipping container uncompressed.
9. Close the shipping container; if a cardboard box is used, tape the flaps closed.
10. Place the parachute into storage according to local requirements.

PERSONNEL PARACHUTE INSPECTIONS

As a PR you have one of the most important jobs in naval aviation. The type of equipment you will be working with is lifesaving equipment. Unlike the other components that make up the naval aircraft, the parachute has no backup system. If all other parts fail, the parachute must function to prevent serious injury or death to the aircrewman.

Parachutes are primarily designed to allow pilots and aircrewmen to escape from disabled aircraft. The nature of this lifesaving system leaves no margin for error in the work of the PR. Parachute inspections must be carefully conducted, ensuring security, rapid positive functioning, airworthiness, and comfort of the entire assembly.

Procedures for working with parachutes are different from other types of work because whenever a critical operation is performed, the rigger's work must be inspected and his performance verified and recorded by a designated inspector before work continues. Continuing with a procedure without obtaining the required inspection is prohibited. Although this constant interruption of work may seem inefficient, you must appreciate how important it is to the parachute user that every step is done exactly right.

REASONS FOR INSPECTING PARACHUTES

Depending on its use, a parachute is exposed to a large number of potentially destructive forces and agents. A parachute consists of many parts and is a complex and sometimes fragile assembly, so there are many chances for something to go wrong. Once a parachute has been inspected, repacked, and placed in service, it is moved around, sat on, leaned against, and in many ways subjected to forces that can cause chafe and wear. When installed in an aircraft or being worn, the parachute may be contaminated by a number of potentially harmful fluids such as perspiration, lubricants and hydraulic fluids, chemicals, and salt water. Dampness can also get into the components from humid conditions.

Aside from inspecting for damage, new parachutes are inspected before being placed in service because it is possible for a mistake to be made when many persons are involved in a manufacturing process. A parachute may also

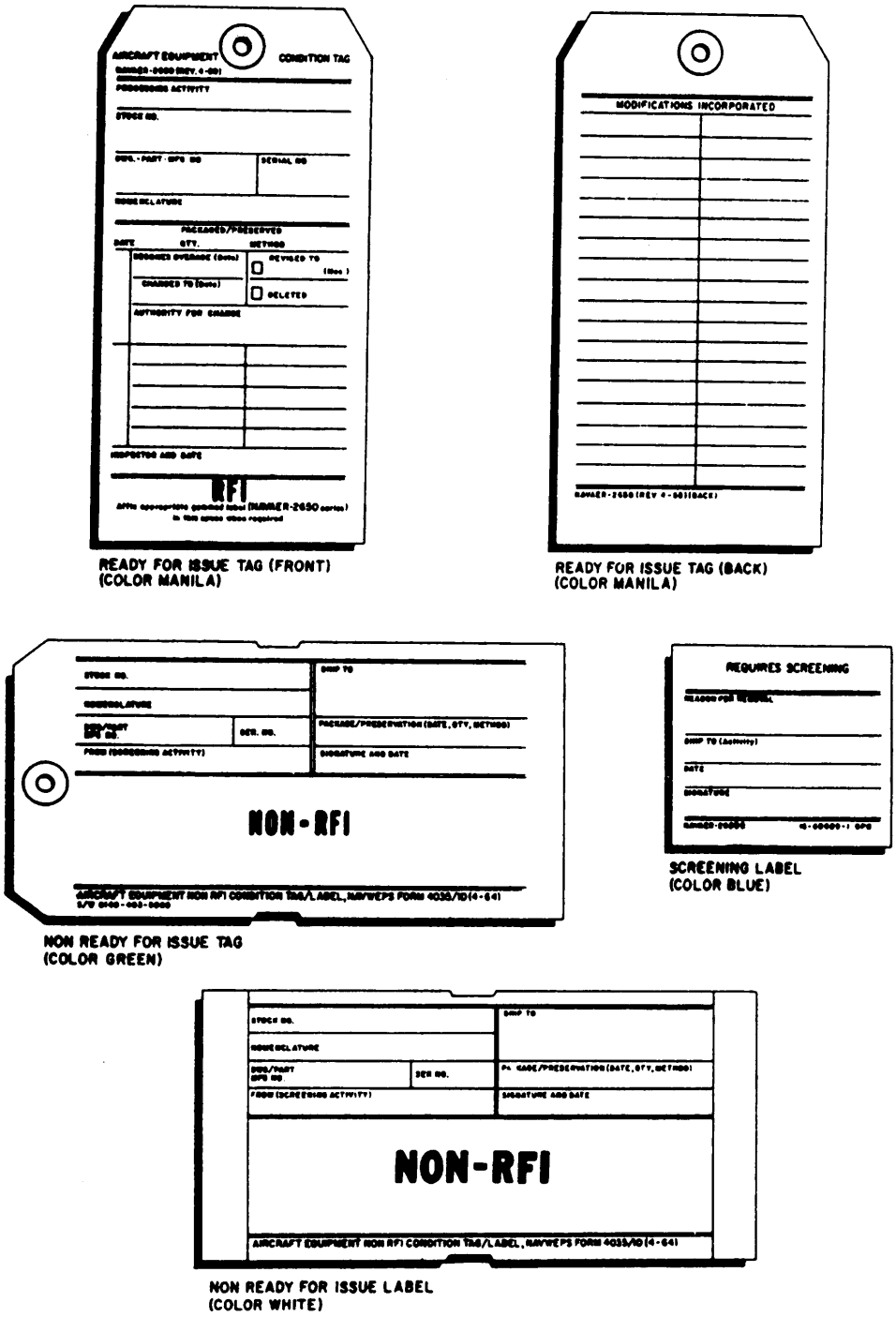

239.116

Figure 1-12.—Shipping tags and labels.

require changes and modifications. These are issued by the Aircrew System Bulletins, Aircrew Systems Changes, and updated material entered in the *Emergency Personnel and Drogue Parachute Systems Manual,* NAVAIR 13-1-6.2.

As you can see, many things can happen to a parachute in service. Inspection schedules based on experience are established to ensure that damage is detected before it becomes serious. You have the responsibility of following these

schedules and for properly doing the required inspections.

INSPECTION SCHEDULES

The frequency and nature of parachute inspections depends on the use of the parachute. Those used regularly for jumping, such as parachutes assigned to SEAL teams, are inspected and repacked after each use; these and others are on a different schedule than those intended for emergency use. Our discussion focuses on emergency parachutes to emphasize that although they are rarely used, they may be damaged in handling or exposed to hazards in their environment.

Emergency parachutes are assigned to operating units. They may be part of an aircraft inventory or they maybe assigned to a ready issue room. To some extent, the frequency of their inspection depends on the type of aircraft to which they are assigned. Those assigned to attack or fighter aircraft are inspected more frequently than those on the larger patrol, cargo, or other planes where they are not sat upon or otherwise subjected to as many hazards.

Major inspections of emergency parachutes are routine when the parachute is first put into service, and then later at intervals to coincide with the time the aircraft is down for major maintenance.

Less extensive inspections that do not involve unpacking the parachute are daily, preflight, postflight, and special. These special inspections are done every 7 days, 10 days, or 14 days, depending on the type of aircraft. Of course, if any damage is found or suspected during these inspections, the assembly is sent to an aviation intermediate maintenance depot (AIMD) for thorough inspection, testing, and possible repair.

Several special inspections may also be done. For instance, after a combat mission the parachute assembly is inspected for missile damage from bullets or fragments. After an emergency use the entire parachute is shipped to the Naval Weapons Center, China Lake, California, for a detailed inspection. Other inspections may be ordered if defects are suspected in a group of parachutes or in association with authorized changes and modifications.

PARACHUTE MAINTENANCE

All parachutes are given periodic maintenance inspections under the direction and control of the maintenance control officer. Maintenance is to be thorough at all times. No instance of careless treatment or neglect of parachute equipment is to be allowed to pass unnoticed. The vital function of this equipment must be uppermost in the minds of all personnel concerned.

SPECIFICATIONS

Parachute maintenance and inspection procedures are performed according to the guidelines set forth in the *Emergency Personnel and Drogue Parachute Systems Manual,* NAVAIR 13-1-6.2, and the *Maintenance Requirements Cards,* NAVAIR 13-600-4-6-3. These manuals are continually updated, and when using them, as in using any publication, you must first make sure that the current changes are included. The manuals will list all of the proper steps, procedures, and points to inspect. They also give you information about proper specifications, technical data, and are used to ensure that all steps are followed, all details are inspected, and that all quality control items are checked at the proper time by a quality assurance inspector (QA). Using these manuals is mandatory and ensures that you are following the current and approved procedures.

Whenever a question on the construction of parachute equipment comes up, you should obtain and study the drawing that applies. Repairs that are difficult should be compared to the drawing to ensure that the finished product is the same as the one in the drawing. The drawing number or reference number of a particular piece of parachute equipment can be found in the applicable work package in the *Emergency Personnel and Drogue Parachute Systems Manual,* NAVAIR 13-1-6.2.

All parachute maintenance is done by the lowest level activity equipped to satisfactorily perform the work. Mission, time, equipment, trained personnel, and operational needs are the basic considerations involved in determining which level performs the work.

PARACHUTE INSPECTION AND MAINTENANCE RECORDS

The following records and documents are used by the Aircrew Survival Equipmentman, under the direction of the maintenance control officer, to provide a systematic means of control.

PREFLIGHT/DAILY/TURNAROUND/ POSTFLIGHT MAINTENANCE RECORD (OPNAV 4790/38)

Whenever you perform any of these routine inspections you must fill out an OPNAV Form 4790/38 (fig. 1-13). You also use this Preflight/Daily/Turnaround/Postfight Maintenance Record Card to record the special (7- or 14-day) inspection in accordance with applicable Aircraft Maintenance Requirement Card decks and OPNAVINST 4790.2 (series).

PARACHUTE CONFIGURATION, INSPECTION AND HISTORY RECORD (OPNAV 4790/101)

The Parachute Configuration Inspection and History Record is designed to provide a continuing historical record of a parachute assembly and its components throughout its

PREFLIGHT / DAILY / TURNAROUND / POSTFLIGHT MAINTENANCE RECORD

1 ☐ PREFLIGHT ☐ DAILY ☐ TURNAROUND ☐ POSTFLIGHT

2 DATE AND TIME	3 T/M/S	4 BUNO	5 SIDE NO	6 ACTIVITY
STARTED _____ COMPLETED _____				

7 CARD NUMBER/ RTG/MOS	8 TOOL CONTAINER NUMBER	9 DISCREPANCY/JCN *	10 CORRECTED YES	10 CORRECTED NO	11 SIGNATURE AND RATE/MOS **

* JCN NOT REQUIRED FOR CORRECTED SERVICING ACTIONS
** SIGNATURES CERTIFY THAT MRCs HAVE BEEN COMPLETED WITH, VIDSMAPs HAVE BEEN INITIATED FOR DISCREPANCIES, AND ALL TOOLS ARE ACCOUNTED FOR

12. MAINTENANCE CONTROL REPRESENTATIVE
(Signature and rate/rank)

OPNAV 4790/38 (REV. 2/85) PREVIOUS EDITIONS MAY BE USED UNTIL SUPPLY IS EXHAUSTED S/N 0107-LF-047-9181

234.20

Figure 1-13.—Preflight/Daily/Turnaround/Postflight Maintenance Record, OPNAV 4790/38.

PARACHUTE CONFIGURATION INSPECTION AND HISTORY RECORD *(instructions on reverse)*

TYPE PARACHUTE	PART NUMBER	SERIAL NUMBER *(canopy)*	DATE PLACED IN SERVICE
NES-12	576AS100-30	32441	3-82
AIRCRAFT BUNO/SERIAL	**CUSTODIAN 3M ORG CODE**	**SCHEDULED REMOVAL DATE**	**DATE REMOVED**
145246	PE5	4004	3362

CARTRIDGES AND CARTRIDGE ACTUATED DEVICE

DEVICE OR CARTRIDGE NOMENCLATURE	PART NUMBER	CARTRIDGE DODIC	DELAY TIME	LOT NUMBER	CAN OPEN/ INST DATE	EXPIRATION DATE	LOCAL USE/SERNO
AUTOMATIC OPENING DEVICE	711-07022-34	N/A	N/A	N/A	MFGR 3-82	N/A	14386
AUTOMATIC OPENING DEVICE CARTRIDGE	MK4MOD2	M282	0.75	IM-81-K002-001	COD 3-82	3-85	1591
SPREADING GUN	SK86-0051-12	N/A	N/A	N/A	OVHL 9-82	9-92	8945
SPREADING GUN CARTRIDGE	CCU-33/A	MF78	0.0	02-SAEC-0382	COD 12-82	12-85	136
L/H PHSRU CARTRIDGE	851AS275	MW19	0.0	5-82	COD 12-83	12-86	112
R/H PHSRU CARTRIDGE	851AS275	MW19	0.0	5-82	COD 12-83	12-86	116
BATTERY	852AS102	N/A	N/A	CAX84B001-004	8-84	8-87	
BATTERY	852AS102	N/A	N/A	CAX84B001-004	8-84	8-87	

TECHNICAL DIRECTIVES

DIRECTIVE TYPE	DIRECTIVE NUMBER	DIRECTIVE STATUS	DIRECTIVE TYPE	DIRECTIVE NUMBER	DIRECTIVE STATUS
66	438	C			
66	446	C			

MISCELLANEOUS HISTORY

DAMAGE CHART ATTACHED ☐ YES ☒ NO	RIPCORD PIN PULL FORCE CHECK	
	DISASSEMBLY	REASSEMBLY
BSG FIRING PIN CHECK 29 LB	READING 25 LB	READING 25 LB
DATE OF LAST COMPLETE INSPECTION AND REPACK 3159	QA INITIALS L.H.B.	QA INITIALS L.H.B.
	SLMIP INSPECTION *(QA initials)* L.H.B.	
INSPECTION	A EPC L.H.B.	B N/A
ALTITUDE CHECK	FOR LOCAL USE	
1 13400 FT		
2 13200 FT		
3 13300 FT		

CONFIGURATION VERIFICATION *(List each item that has service life)*

NOMENCLATURE	PART NUMBER	CONTRACT NO.	DATES MFG	DATES SERV	DATES EXP	REMARKS
PILOT CHUTE	60A125E16-1	N4160B-80-C-0377	9-80	3-81	3-88	
BRIDLE ASSY	510AS106-1	N00383-75-C-0131	9-77	4-79	9-89	
CANOPY	107AS106-22	N00383-81-C-4528	1-82	3-82	3-87	
CROSS-CONNECTORS	677AS100-2	N60530-82-C-0311	5-83	12-83	12-95	
RISERS	510AS136-17	N00383-77-C-0888	12-77	10-78	10-96	
CONTAINER	510AS101-97	N00383-82-C-2790	9-82	12-82	12-94	
EPC	510AS108-1	N00383-81-C-4577	2-82	12-82	12-89	
EPC BAG	699AS101-1	N00383-80-C-2160	8-80	12-83	12-85	
L/H PHSRU EPA	852AS101	N60530-83-C-0043	12-83	12-83	12-89	S/N 306
R/H PHSRU EPA	852AS101	N60530-83-C-0043	12-83	12-83	12-89	S/N 123

PACKED BY *(Full name)*	INSPECTED BY *(Full name)*	3M ORG CODE	DATE
PR-2 Kevin J. Taylor	PR-1 L.H. Ballwin	PQC	3363

82 1 8502A

Figure 1-14.—Parachute configuration inspection and history record.

service life (fig. 1-14). The form is a two-part NCR form. The hardback copy is to be filed in the aircraft logbook for the aircraft in which the parachute is installed. All original (flimsy) copies of the history record are maintained in a permanent file as designated by the cognizant aircraft maintenance officer. A permanent file of all history records, including the current hardback copy, is maintained as designated by the cognizant aircraft maintenance officer for spare parachute assemblies; upon installation of the spare parachute into an aircraft, the hardback copy is transferred to the appropriate aircraft logbook. Upon transfer of the aircraft or

parachute assembly from one activity to another, all original (flimsy) copies from the permanent file are transferred to the new custodian to provide a complete history of the parachute assembly. This will also initiate the new custodian's permanent file. When a parachute assembly has been involved in an aircraft accident, the history record and the permanent file of original (flimsy) history records are forwarded to the Commander, Naval Weapons Center (Code 64123), China Lake, CA 93555.

Initiation

The IMA placing the parachute assembly into service initiates the Parachute Configuration Inspection and History Record. The IMA initiates a new history record each time the parachute assembly is inducted for repack or maintenance. All required entries must be legibly recorded, using a ball-point pen or typewriter. The Aircraft Buno/Serial Number block maybe annotated in pencil or left blank, to be filled in by the cognizant custodian of the parachute assembly. Entry errors are ruled through a single line and initialed by the quality assurance inspector. The hardback copy from the previous inspection can be destroyed upon acceptance of the newly repacked parachute assembly by the OMA.

The type parachute (NES-12, A/P28S-27), the parachute assembly part number (576AS100-27, MBEU 10030PA-4), the canopy serial number, the date the canopy was placed in service (month and year), the aircraft buno/serial number, the controlling custodian's alphanumeric 3-M organization code, the next scheduled removal date (Julian date), and the actual removed date (Julian date) must be entered at the top of the history record.

Cartridges and Cartridge-Actuated Devices

The parachute in the example uses a cartridge-actuated device, so you must fill out the appropriate columns on the history card. If the parachute does not use the devices listed, you must use the letters N/A (not applicable) in the column(s). Enter the part number, type of cartridge being used, the time delay of the cartridge, lot number, and the expiration date of the cartridge.

Technical Directives

Since you are placing the parachute into service, you must update its history of technical directives with prescribed changes and modifications that were previously incorporated. The codes used to properly fill out this part of the history card can be found in appendix K of OPNAVINST 4790.2 (series). You also need to use NAVAIR 13-1-6.2 to find a listing of all technical directives that apply to this equipment.

Miscellaneous History

If applicable, you should enter the results of the ripcord pin pull force check for both disassembly and assembly. Notice the quality assurance inspector's initials are entered below each recorded measurement. The inspector's initials must also be placed in the space following the Suspension Line Mandatory Inspection Point (SLMIP). If applicable, the automatic parachute ripcord release firing altitude and the results of the spreading gun firing pin pull force check are logged in the proper location. If these checks do not apply, you should enter N/A. You should enter the Julian date of the last complete inspection and repack, if applicable. If you find these actions are not applicable, enter N/A. Indicate whether or not a canopy damage chart is attached by checking the appropriate box.

Configuration Verification (A list of each item that has a service life)

All parachute components other than cartridges and cartridge-actuated devices with assigned service life must be entered in the Configuration Verification Section of the history record. Service life items can be identified by referring to the Illustrated Parts Breakdown Numerical Index of the applicable parachute assembly work package. Enter the nomenclature, part number, contract number, manufactured date (month and year), placed-in-service date, and the expiration date for each component with a service life. Obtain the date of manufacture and contract number from the component label. The placed-in-service date is from the date the shipping container seal is broken. If the service life has been extended for a particular component, enter the issuing authority and the date-time group of the authorizing message in the Remarks column. If the contract number is not known or cannot be determined, enter UNK in the appropriate block.

After the parachute assembly has been repaired, inspected, and repacked, and the packer and inspector are satisfied the parachute assembly is ready for flight, the packer and quality assurance inspector must legibly sign their full names and rates, QA stamp in the inspector block, and enter the date and 3-M organization code of the IMA at the bottom of the history record. The stamp must not obscure the signatures.

Procedures

Upon transferor the parachute, the current hardback copy and all original (flimsy) copies in the permanent file are forwarded to the new custodian to provide a complete history of the entire service life of the assembly.

When a parachute has been involved in an aircraft accident, the record is forwarded in accordance with OPNAVINST 3750.6.

CANOPY DAMAGE CHART
FOR 28-FOOT FLAT CANOPY

ACTIVITY			DATE
DATE OF MANUFACTURE	CONTRACT NO.	SERIAL NO.	INSPECTOR (PRINT)

INSTRUCTIONS

1. USE FOLLOWING SYMBOLS TO INDICATE LOCATION AND TYPE OF DAMAGE ON CANOPY DIAGRAM.

6	TEAR, 6 — INCHES LONG
3 4	TEAR, "L" SHAPED WITH 3 — AND 4 — INCH LEGS
3 4	TEAR, "T" SHAPED WITH 4 — INCH BASE AND 3 — INCH LEG
8	RUPTURE, 8 — INCH DIA AT WIDEST POINT
	BURN MARKS
	STRAINED AREA
	PULLED DRAG SURFACE THREAD

	SINGLE BROKEN DRAG SURFACE THREAD
#	WEAVE SEPARATION
S D	STAINS / DISCOLORATION
3	BROKEN SEAMS STITCHES ALONG 3 INCHES OF SEAM
	PULLED OR LOOPED SEAM THREAD
	OTHER DAMAGE: EXPLAIN

2. MARK DAMAGE USING SYMBOLS TO SHOW AREA AFFECTED.
3. AS DAMAGE IS REPAIRED ON EACH GORE, PLACE SYMBOL "OK" ADJACENT TO SKIRT AT END OF EACH GORE.
4. 28-FOOT DIA CANOPIES HAVE NAMEPLATE ON GORE 28.

REMARKS _____

THIS IS A PERMANENT RECORD. DO NOT DISCARD. UPON COMPLETION OF REPAIRS, THIS CHART IS TO BE AFFIXED TO THE PARACHUTE CONFIGURATION, INSPECTION AND HISTORY RECORD. (FRONT)

62 1 5604

Figure 1-15.—Canopy damage chart for 28-foot diameter canopy (page 1).

When a parachute (canopy) has been retired because its total service life has expired, the record may be destroyed. Subassemblies for which the total service life has not expired may be salvaged for future use. Appropriate service life information is transcribed to an Aircraft Equipment Condition Tag (NAVAIR-2650) and attached to the salvaged items if they are to be reused. **Under no circumstances should a salvaged item be reused if its previous history cannot be firmly established.**

CANOPY DAMAGE CHARTS

Whenever a canopy is inspected and found to need repairs, an appropriate Canopy Damage Chart must be filled out. An example of this chart is shown in figure 1-15. The symbols to be used are shown on one side of the chart. As each defect is repaired, you write the letters "OK" in the section representing the respective gore. If repairs cannot be made locally, the chart goes with the

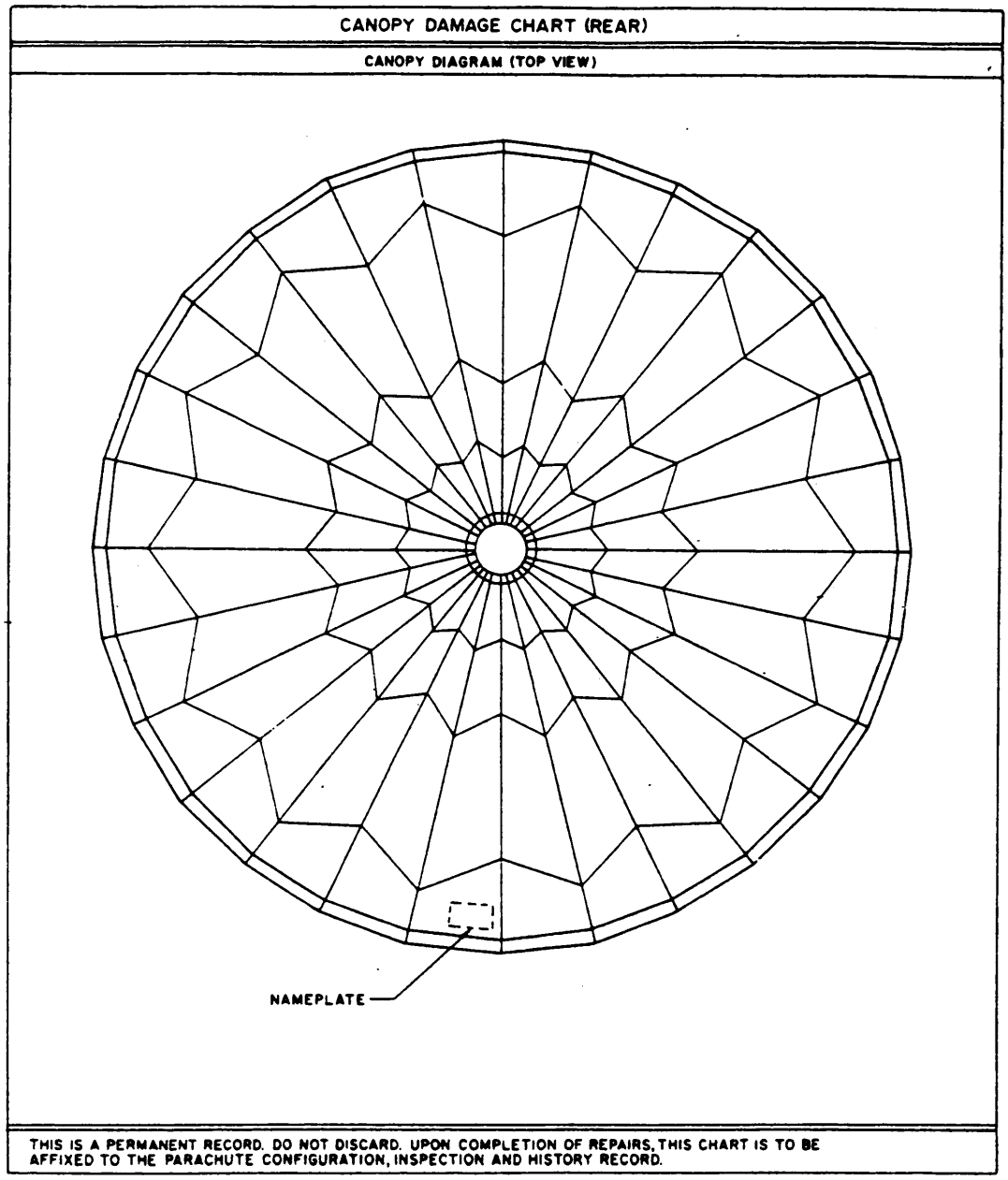

Figure 1-15.—Canopy damage chart for 28-foot diameter canopy (page 2).

canopy to the next higher level maintenance activity. **This form must not be discarded.** When the repairs are done, the Canopy Damage Chart is attached to the Parachute Configuration, Inspection, and History Record.

NAVAL AVIATION MAINTENANCE PROGRAM FORMS

The following forms used in the Naval Aviation Maintenance Program (NAMP) are applicable to parachute maintenance: VIDS/MAF Form, Support Action Form, and DoD Single Line Requisition System Document. Proper completion of documents is essential to the function of the program. Detailed instructions on their use may be found in the *Naval Aviation Maintenance Program Manual,* OPNAVINST 4790.2 (series).

RECORDING MODIFICATIONS

When a modification is performed on a parachute assembly, you must record the assigned technical directive code and modification code on the Parachute Configuration, Inspection and History Record. Other records must be completed in accordance with OPNAVINST 4790.2 (series).

INSPECTIONS

The various times at which inspections are performed on personnel parachutes are discussed in the following paragraphs.

DAILY INSPECTION

A daily inspection should be performed on all in-service parachute assemblies either installed in aircraft or in ready issue rooms. The inspection may be accomplished by line personnel, or by an issue room custodian who has been checked out by both the AME and PR shops and found qualified. The inspection is performed in accordance with the MRC for the equipment and the requirements detailed in NAVAIR 13-1-6.2 for the aircraft involved. It is done before daily flight operations and is a visual in-place inspection. It is also included in the special (7- or 14-day) inspection.

The packaged parachute is inspected for external evidence of damage. You should be looking for wear or other evidence of physical abuse. The assembly should also be checked for stains, which may indicate contact with harmful fluids or chemicals. Any stain should be considered harmful until the fluid that made it is identified. Stains or discolorations may also be caused by contact with a hot object. Heat can seriously weaken the synthetic fabrics in parachute assemblies. Another possible source of trouble is exposure to ultraviolet radiation such as sunlight or some types of artificial lighting. Any evidence of damage or suspicious condition must be reported to maintenance control.

SPECIAL INSPECTION

The special inspection is performed at intervals of 7, 10, or 14 days, depending on the type of aircraft. In-service parachute assemblies installed in aircraft and in ready issue rooms are also given this special inspection. This inspection includes the integrated torso harness and quick attachable harnesses. The daily inspection is included as part of performing the special inspection. Assemblies used for training, parachute rescue, pathfinding, and reconnaissance teams, and those parachute assemblies not assigned to a specific type of aircraft are inspected every 14 days. It is done by organizational level maintenance PR personnel, such as yourself, and conducted only under adequate lightning conditions.

This inspection includes, but is not limited to, emergency aircraft escape assemblies and/or systems, as well as assemblies used for premeditated free-fall or static line parachute descents. The reserve (emergency) parachute, which may form a part of a training-type, troop-type, or a test assembly, is also inspected. Parachute assemblies are not opened for the special inspection or for the daily inspection. If you find or suspect any damage or contamination, notify maintenance control. When you complete the special inspection, enter your full name, rate, and current date on the Preflight/Daily/Turnaround/Postflight Maintenance Record Card.

ACCEPTANCE (ORIGINAL ISSUE) CALENDAR/PHASED/CONDITIONAL INSPECTIONS

The acceptance (original issue)/calendar/phased/conditional inspection is performed at the lowest level of maintenance possible. These inspections include, but are not limited to, aircraft emergency escape assemblies and/or systems.

Original Issue/Acceptance

The original issue inspection is performed at the time a parachute is placed into service. The original issue inspection consists of a visual inspection of the assembly and a repack of the parachute assembly in accordance with the applicable work package. When a parachute assembly is an aircraft inventory item, the acceptance inventory inspection serves as the original issue inspection. In this case, the packed parachute assembly is visually inspected for damage, and the records concerning the parachute are examined for discrepancies or missing information. If any discrepancy is found, a conditional inspection, which includes a repack of the parachute assembly, is performed.

Calendar/Phased

The regular inspection cycle of a parachute assembly should correspond either to the aircraft calendar inspection or to the phased maintenance inspection cycle program, as directed by NAVAIR 13-600-4-6.3. You should ensure the parachute assembly inspection period does not expire before the scheduled maintenance period of the aircraft. To meet unusual situations and facilitate workload scheduling, a plus or minus 1 week, or portion thereof, may be applied to the authorized inspection interval. To enable a ferry flight to return to home station/ship after an away from home grounding discrepancy of such duration that inspection interval expired, necessary additional days maybe added. However, in each instance deviations apply only to the immediate inspection due. If unusual circumstances dictate deviations of succeeding inspection intervals, each deviation must be computed from the date on which the inspection would have been due if the preceding deviation had not been granted.

Conditional Inspection

When a parachute assembly must be inspected as the result of a specific situation or set of conditions unrelated to the normal inspection interval, a conditional inspection is performed.

Postcombat Inspection

Organizational-level maintenance inspects parachute assemblies for external damage or abnormal condition after each combat mission. When an aircraft has been subjected to gunfire, all parachutes are examined for damage prior to the next flight. If bullets or fragments have entered the parachute assembly, you must remove it from service and perform a conditional inspection.

Aircraft Accident Report Inspection

Any personnel parachute, along with related subassemblies or equipment (pilot parachutes, stabilization parachutes, containers, harnesses, cushions, automatic parachute ripcord release assemblies, ballistic spreading guns), that has been recovered following use in an emergency bailout or ejection must be returned to the nearest naval supply activity for shipment to the Commanding Officer, Naval Weapons Center (NWC), China Lake, California. The parachute must be in the same condition that it was when recovered. Do not chain the lines. You do this in the event that an engineering investigation is necessary by NWC. Stencil on the outside of the shipping container in 1-inch letters the following: "THIS EQUIPMENT HAS BEEN USED IN AN EMERGENCY SITUATION." These items are required so that a design deficiency can be detected, or to establish requirements for product improvements.

OPNAV 3750.6 gives procedures you must follow to provide the Naval Weapons Center with sufficient information to properly evaluate and improve these parachutes for service use. In accordance with this instruction, you will give NWC the following information:

1. Name of submitting activity and AAR number
2. Date, time, and place of use
3. Name, rank/rate, serial/service number of user
4. Model aircraft, altitude, attitude, airspeed, and sink rate at time of ejection or bailout (if known)
5. Type of parachute and serial number of canopy assembly
6. Type and model designation of ejection seat (if applicable)
7. Type of automatic parachute ripcord release and serial number
8. A brief narrative summary of any difficulties with the personnel parachute equipment and/or automatic actuator or other additional information that may be applicable

Also include the Parachute Configuration, Inspection, and History Record and any reference information or documents that would have a bearing on a technical investigation. If the aircrewman sustained fatal or serious injuries during the escape or recovery sequence, include photographs of the parachute, ejection seat, and other components at the scene of the impact.

Ensure the proper shipping tags and labels are attached to all equipment and the shipping container. If pyrotechnics or explosives are in the package, it should be noted on the outside of the container.

PROCEDURES FOR PRELIMINARY TESTS AND INSPECTIONS

When you are assembling a parachute for an original issue inspection or performing a normal calendar repack, you will have to do some preliminary test and inspections that are common to all personal parachutes. These inspections and tests are discussed in the following text.

RIPCORD PULL TEST

Parachutes must be given a ripcord pull test before being unpacked for inspection. The maximum pull force that you may use is 27 pounds. If you go over 27 pounds, the ripcord pins, cones, and grommets must be checked for bends, dents, and roughness, and make sure that the ripcord cable moves freely in the housing. Inspect the housing for sharp bends or dents and replace any damaged parts. Silicone spray may be sparingly applied to ripcord parts. Make sure that ripcord pins are properly positioned before testing. All assemblies with metal ripcord handle clips require an additional test. To do this, use a straight pull to remove the handle from the clip; this will require 10 to 20 pounds of force. If not within limits, use pliers to adjust the clip.

SERVICE LIFE CHECKS

Testing the ripcord opens the container. If the assembly includes explosive devices, they must be deactivated at this time. The canopy is then placed on the table with the nameplate up. If the parachute is being placed in service, the date is stenciled on the parachute canopy on the nameplate gore directly below the nameplate.

For a periodic inspection, you should verify the nameplate data against the Parachute Configuration, Inspection, and History Record, or "History Card." If the service life dates listed on the history card are in accordance with the *Maintenance Requirement Cards,* NAVAIR 13-600-4-6-3, check their expiration dates against the current date of inspection. Items that have reached service life limits must be replaced. Items that will become overage after the assembly is repacked may remain in service until the next inspection date of the complete assembly. An exception to this are the explosive devices, which must be replaced if their expiration date will be reached before the next inspection.

REPLACEMENT OF PARACHUTE ASSEMBLIES AND SUBASSEMBLIES

Not all the components of a parachute assembly come to the end of their service lives at the same time. After a parachute has been in service for some time, some of the components or subassemblies will have to be replaced in the course of the periodic inspections.

If you find an assembly or subassembly that has reached the service/total life limit, it should be returned to supply for appropriate disposition according to current supply instructions. Before turning an overage assembly in to supply, you should remove all serviceable ready for issue (RFI) subassemblies. You should carefully inspect all nylon webbing and cloth on items to be salvaged. Dirt, oil and grease greatly weaken these materials. All fabric items salvaged must have date of manufacture and date placed into service markings verified prior to disassembly. Cartridges used on cartridge-actuated parachutes are to be handled, shipped, stored or disposed of in accordance with NAVAIR 11-100-1. When an in-service parachute does not have a start of service date, the service life from date of manufacture expires as follows: in 7 years for emergency use parachute assemblies; in 10 years for troop and training assemblies.

CONTAMINATION INSPECTION

Contamination of a parachute canopy or an assembly could result in the malfunction of the complete assembly. It is very important that you be able to recognize a harmful stain. All parachute assemblies must be carefully inspected for the following types of contamination:

1. Acid/alkaline
2. Salt water

3. Perspiration
4. Freshwater
5. Mildew/fungus
6. Fire-fighting agent
7. Petroleum products
8. Bloodstains
9. Mud/dirt/sand/trash

Acid and Alkaline Contamination

If a parachute assembly is suspected of having acid or alkaline contamination, it must be tested with a pH test paper. A pH reading of 5.0 to 9.0 is in the safe zone. Readings below 5.0 indicate excess acidity, and readings above 9.0 indicate excess alkalinity. By following the steps listed below, you will be able to conduct a proper inspection to determine if a stain is acid or alkaline. You need to have distilled water and a pH test paper kit (full range and short range).

CAUTION

MAKE SURE THAT THE TESTING AREA IS FREE OF CONTAMINANTS TO AVOID FALSE READINGS OR DAMAGE TO THE ASSEMBLY.

To perform an acid and alkaline contaminant inspection properly, you should take the following steps:

1. First, dampen the suspected area with distilled water.
2. Place a piece of full-range test paper (0.0 to 14.0 pH) on the dampened area. Compare the color of the paper with the chart samples to determine the approximate pH and which specific short-range test paper to use.
3. Place the short-range test paper indicated by step 2 on the dampened area. The color the paper changes to will indicate the pH factor of the affected area. By matching the test strip with the applicable range color chart supplied with the pH indicator kit, you can determine the strength of the acid or alkaline present.

NOTE: You must be careful not to let the suspected contaminated area come into contact with any other area, as this could spread the damage.

4. Treat contaminated areas of the parachute assembly in accordance with NAVAIR 13-1-6.2.

Other Contaminations

Those stains caused by contact with acid, oil, and salt water are the most harmful to nylon and should be removed as quickly as possible to prevent further deterioration of the material. Although sun rays do not stain, they are most harmful to nylon. Parachutes and components must be kept out of the direct sunlight.

INSPECTING FOR WEAR AND PHYSICAL DEFECTS

Wear in a parachute is not difficult to detect. Chafing at the comers or on outside surfaces is where the most wear occurs. Parts of parachutes and related equipment showing excessive wear should be replaced or repaired, the work to be accomplished at the lowest maintenance level capable of performing the task.

PILOT PARACHUTE INSPECTION

Inspect the fabric drag surfaces, rib pockets, lift webs, seams, and suspension lines for signs of contamination, cuts, tears, burns, fraying, and loose or missing stitches. Inspect the vane material for defects and deterioration. Inspect for seam separation along the seam area where the vane attaches to the cone and suspension lines. Yarn separation is acceptable; however, replace the pilot chute if the vane material contains holes, rips or tears. Inspect the spring assembly for sufficient tension and bends. Replace ail loose or broken tackings. There is little that you can repair on a pilot parachute. If any damage is found, you must replace the pilot parachute in accordance with NAVAIR 13-1-6.2.

CANOPY INSPECTION

Inspecting the canopy requires the most time. You must take your time in order to be certain that you don't miss any defects. NAVAIR 13-600-4-6-3 and NAVAIR 13-1-6.2 spell out the step-by-step procedures for this inspection. Any damage must be recorded on a canopy damage chart. (See figure 1-15.) To inspect the canopy for possible defects or damage, you should take the following steps:

1. Lay the canopy on a clean packing table so its nameplate gore is facing down.
2. Place tension on the canopy.

3. Have your helper raise the suspension line. Use Y-stands at the skirt hem to hold the suspension lines.

4. You, as the packer, start at the skirt hem and inspect the upper radial seam from skirt hem to peak. You inspect the vent hem, collar and ring, lower radial seam, fabric surface, diagonal seams or tapes, and skirt hem. Minor defects that do not weaken the assembly are not reported on a canopy damage chart. If necessary, minor defects may be corrected by light brushing or trimming.

5. Significant damage and major defects, such as holes, rips, tears, or contaminated areas that have to be removed, are reported on the canopy damage chart.

Use the same procedures to inspect all canopy gores.

SUSPENSION AND VENT LINE INSPECTION

To inspect the suspension lines, you and your helper grasp one group of suspension lines at the connector links and walk toward the canopy skirt hem, allowing the lines to run freely over the palm of your hand. Visually examine the lines for damage and defects. Upon reaching the skirt hem, grasp the remaining groups of lines and inspect them the same way, walking toward the connector links. The lines at the canopy vent are also visually examined. Your inspection includes, but is not limited to, the following:

1. General condition of the suspension lines including fraying, ruptures, inner cores protruding from lines; dirty, lumpy, hard or thin spots; friction bums; improper overlap length; presence

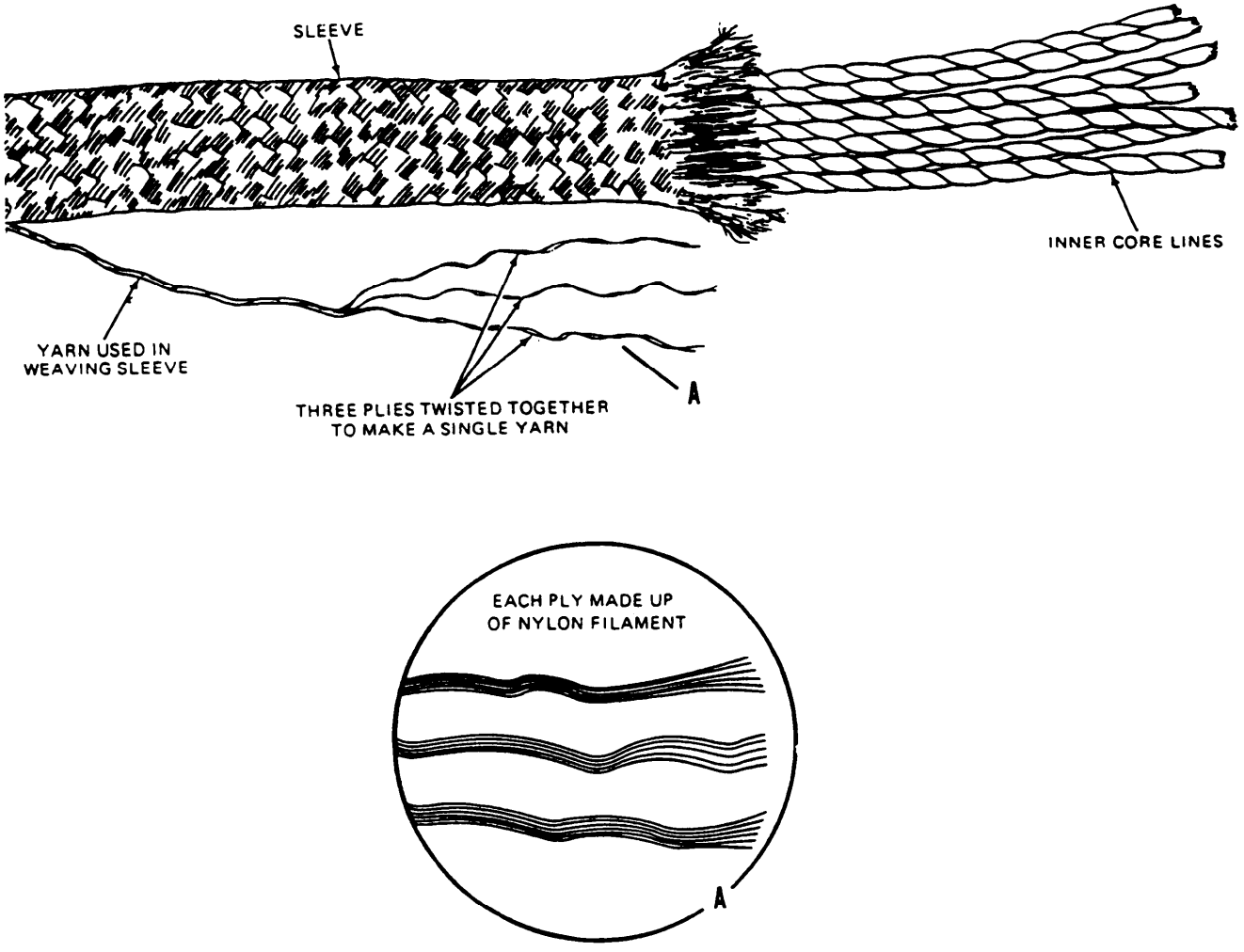

Figure 1-16.—Suspension line construction.

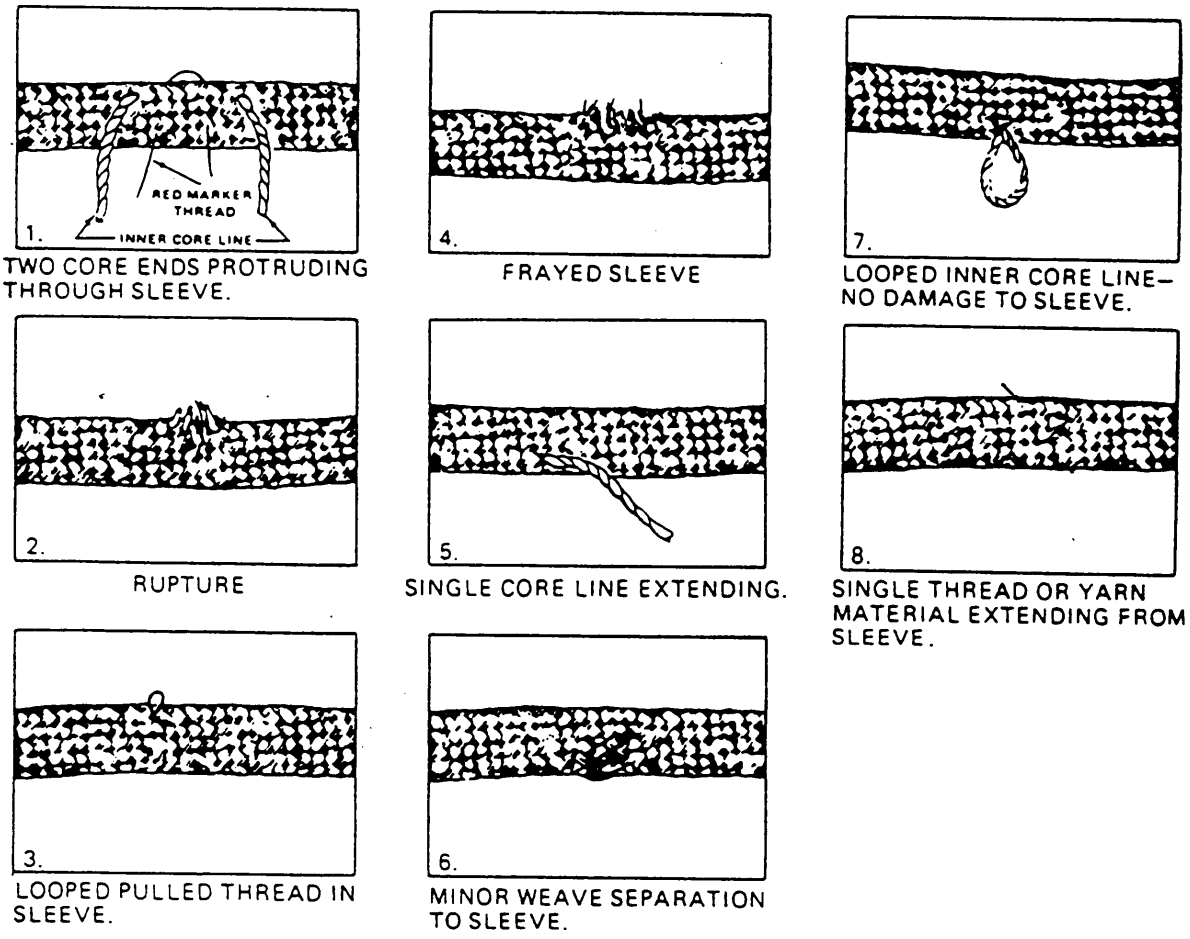

Figure 1-17.—Suspension line damage.

of twists in individual lines; and the proper sequence of lines on the connector links. To help you decide on the various types of damage, see the examples in figures 1-16 and 1-17.

2. Be sure that each of the suspension lines is in proper rotation at the connector links and through the canopy.

3. On an original issue inspection, you must measure the suspension lines for proper length. Apply a 20-pound tension to each line. The length of the shortest line and the length of the longest line must not vary more than 2 inches.

4. Inspect the attachment at the skirt hem for thin spots at the V-tabs; also, check the condition of the V-tabs.

5. Inspect the four line release system. The four line release system permits four of the suspension lines on one side of the parachute to be detached from the connector links during a parachute descent. This permits the parachutist to dampen oscillations and to have some control over the direction the parachute travels when descending.

6. Other defects should be noted on the Parachute Configuration, Inspection and History Card. If a defective line is found that would affect the safe operation of the assembly, the line must be replaced at a depot-level maintenance activity.

CONNECTOR LINK INSPECTION

To inspect connector links, you should proceed as follows:

1. First, examine the connector links for proper part numbers, signs of corrosion, distortion, bends, dents, nicks, burrs, sharp edges, breaks, and if applicable, defective yoke and plate assemblies.

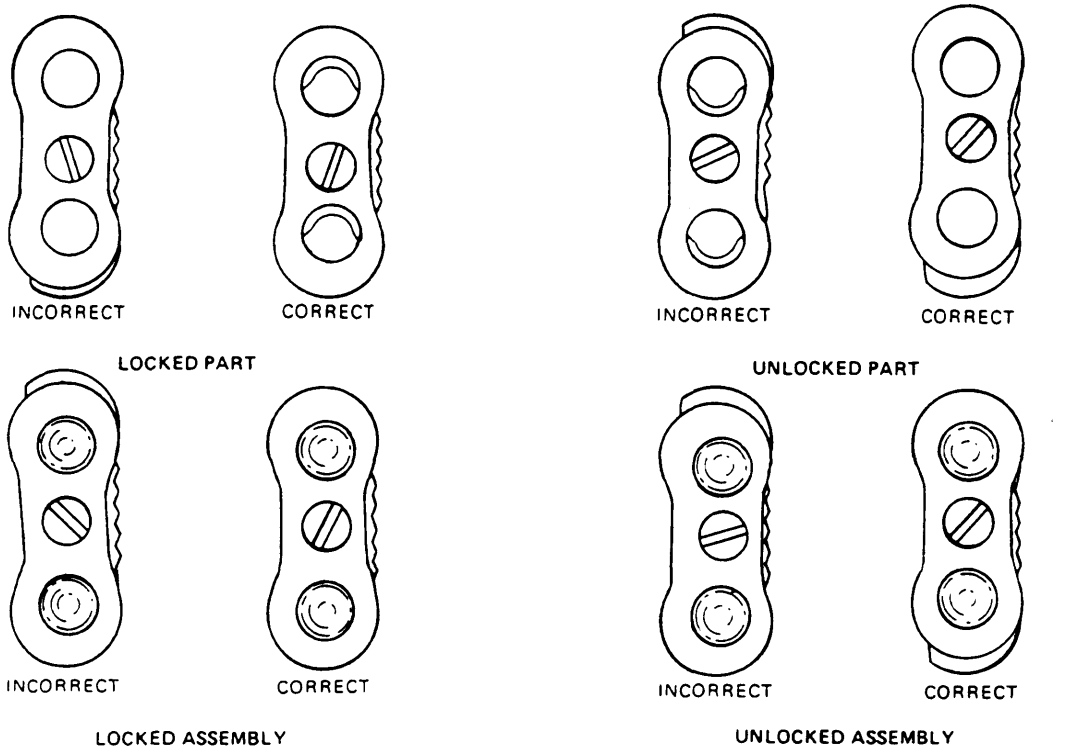

Figure 1-18.—Locked and unlocked connector links.

2. If required, examine the yoke and plate assembly for proper installation (fig. 1-18). When the yoke and plate assembly screw is tightened, there should be a maximum of 1/64-inch play in the assembly. (To tighten the screw use a torque of 20 to 25 lb-in.)

At this point, a mandatory inspection is performed by a quality assurance inspector. All of your work stops until the mandatory inspection is performed and the assembly has been found acceptable.

BALLISTIC SPREADING GUN INSPECTION

While inspecting the ballistic spreading gun, you may have to remove, replace, or make some adjustment. All work must be in accordance with the procedures in the applicable chapter of the NAVAIR 13-1-6.2. The ballistic spreading gun is described in the next chapter of this text.

HARNESS/RISER ASSEMBLY INSPECTION

Inspect the harness webbing for signs of contamination from oil, grease, acid, or other foreign matter, such as rust at points of contact with metal parts. Inspect for cuts, twists, fading, excessive wear or fusing (indicated by unusual hardening or softening of webbing fibers), fraying, burns, abrasions and loose or broken stitching (in excess of three stitches). If applicable, inspect the four-line-release lanyard flute for wear and proper attachment. If you find any damage to the harness, dispose of it and replace it in accordance with applicable rigging and packing procedures.

When a replacement harness is installed, you should stencil the date, preceded by the letter *R*, in the center of the horizontal back strap in letters 1/2-inch high. For example, R-2-88 indicates a replacement was made in February 1988.

If fewer than three stitches are loose or broken, repair the riser or harness assembly by using nylon 6-cord, lock-stitch over original stitch and 3/4 inches on both sides of the original. Use four to six stitches per inch.

Hardware Inspection

To inspect harness and riser hardware, proceed as follows:

1. Inspect the canopy quick-release fittings for breaks, corrosion, pitting, bends, dents, and sharp

edges. Check the tamper-dot on the locking screw. If it is broken, tighten it and apply a new tamper-dot to the screwhead using lacquer (TT-L-32, 11136, insignia red) or equivalent. Remove sand or any dirt from the mechanism using an air hose to blow it out at not more than 50 psi pressure. Wipe dirt and grease from fittings with a clean rag. Do not lubricate the fittings. Replace all damaged fittings.

2. With the canopy quick-release fitting locking cover plate held in the open position, insert a torquemeter into the hexagonal cavity located on either end of the knurled locking-lever shaft. With the canopy quick-release fitting locking cover plate held in the open position, rotate the knurled lever shaft until it reaches the stop. Record the torque reading. The allowable torque is 28 to 50 ounce-inches. All canopy quick-release fittings that do not meet torque test requirements must be replaced.

3. Inspect all other hardware for signs of corrosion, pitting, ease of operation, security of attachment, bends, dents, nicks, burrs and sharp edges. Make sure that the rollers in the roller yokes turn freely. If you find any parts damaged, forward the riser or harness assembly to supply for screening.

NOTE: Hardware that has been rejected is forwarded to the Commanding Officer, Naval Weapons Center, China Lake. California, Attention: Code END, 4.

Cross-Connector Strap Inspection

Inspect the cross-connector strap(s) for signs of contamination, cuts, fraying, burns, and loose or broken stitching. If you find any damage, dispose of them locally, and replace them in accordance with applicable rigging and packing procedures.

RIPCORD ASSEMBLY INSPECTION

The ripcord was inspected before the parachute was unpacked. Now it is inspected again. To inspect the ripcord assembly, examine the following:

1. Inspect the ripcord handle. Examine the cable and locking pins for signs of corrosion, bends, dents, cracks, loose swage joints, and breaks. If damaged, dispose of it locally.

2. Inspect the ripcord housing for signs of corrosion, bends, dents, and for security of attachment. If any damage is found, replace the housing.

3. Inspect the ripcord housing release clamp and baseplate for signs of corrosion, bends, dents, cracks and security of attachment.

4. Inspect the ripcord housing release lanyard and guide for signs of contamination, tears, fraying, loose or broken stitches, cuts, burns, correct length and security of attachment.

5. If you find any loose or damaged tackings, they must be replaced.

Ripcord Handle Pocket Inspection

Inspect the ripcord handle pocket for signs of contamination, cuts, tears, burns, fraying, and loose or broken stitches. If such damage is found, the pocket is replaced. You have an option on how the new pocket can be installed. You may install a new pocket by machine stitching, using nylon thread, size E (V-T-295), or by whip stitching, using waxed nylon 6-cord, type I, doubled, stitches being 3/8-inch apart.

Ripcord Handle Clip Inspection

To inspect the ripcord handle clip, you should do the following:

1. Examine the clip for corrosion, sharp edges, bends, twists, and dents. Examine the webbing for contamination, fraying, loose or broken stitching, cuts and burns. Replace any damaged stitching. If other damage exists, replace webbing and/or clip.

2. If any maintenance is performed on the clip, repeat the pull-force test outlined in NAVAIR 13-600-4-6-3 and described earlier in this chapter.

CONTAINER ASSEMBLY INSPECTION

When you inspect the container assembly, examine all flaps, locking cones, and grommets, spring opening bands, and tackings; checking

fabric, seams, reinforcement, and hardware. Check fabric, seams, webbing and reinforcement for holes, cuts, tears, fraying, contamination, and deterioration. Examine hardware for corrosion, bends, dents, nicks, sharp edges, proper function, and security of attachment. Make sure that you keep a record of any damage for later repairs. Repair holes, tears, snags, or rips in container fabric using approved procedures as described in NAVAIR 13-1-6.2.

Some parachute containers use rubber retaining bands to secure the suspension lines. On most assemblies these rubber bands must be replaced at each repack regardless of their condition.

COMPLIANCE WITH CURRENT DIRECTIVES

On parachute repack cycles, or when otherwise directed, inspect the parachute assembly and components for updating according to the latest modifications. For each type of parachute, refer to the *Emergency Personnel and Drogue Parachute Systems Manual,* NAVAIR 13-1-6.2, and recent Aircrew System bulletins and changes for all current parachute configurations. Do not permit any local modifications without prior approval by proper authority.