APPENDIX I

SILVER RECOVERY

Recovering silver from the photographic process saves the government money. These savings can come from two sources: the monetary value of recovered silver and avoiding fines from the Environmental Protection Agency.

Like most natural resources, silver is a valuable and diminishing resource. In photography, silver forms the image on most types of photographic films. Unlike many other natural resources, silver is not destroyed in the photographic process. Much of this silver can be recovered, refined, and used again.

In photography, silver is recovered from two main sources: photographic solutions and black-and-white scraps (film and paper). When most films and papers are processed, some of the silver they contain are removed in the fixing bath. With positive types of black-and-white film, as much as 80 percent of the silver that was in the emulsion may be removed during fixing. With color film and paper, close to 100 percent of the silver is removed in the fixer.

When black-and-white negative film or black-and-white paper with a high percentage of exposed area is processed, most of the silver remains in the emulsion. Most of the silver that remains in film or paper can be recovered.

ENVIRONMENTAL ISSUES

The awareness and concern for polluting our environment has brought about new legislation and stricter enforcement of existing environmental codes. Silver is one of the heavy metals that is controlled by federal, state, and local legislation. These government agencies monitor the amount of silver that is discharged into the sewer system. Each Navy imaging facility is subject to environmental codes and restrictions of the state and local area. Each state has a similar set of codes that may differ somewhat, so it is important for you to become familiar with them. For example, the maximum silver concentration limit for an imaging facility in Gulfport, Mississippi, may be 5.0 mg/L (ppm), whereas an imaging facility in San Diego, California, may be 0.05 mg/L (ppm).

Compliance with these strictly enforced local sewer code ordinances is of greater concern today than economic gain. Violations can result in severe fines. Individual violators may also be held personally responsible for such fines. An excessive concentration of silver in the effluent of a photographic processor can cause an imaging facility to be closed until the silver concentration is within acceptable limits. A copy of the sewer codes for your local area may be obtained from the sewer authority or from Navy Public Works.

SILVER RECOVERY TECHNOLOGY

A number of different methods for recovering silver from used photographic solutions are in use today. Two methods that are used commonly in Navy imaging facilities are metallic replacement and electrolytic plating.

METALLIC REPLACEMENT

The metallic replacement method uses a plastic cartridge packed tightly with steel wool. The cartridge resembles a 5-gallon bucket with tubes protruding from the cover. The system is inexpensive and well-suited for the small-volume user.

A silver recovery cartridge operates on the principle of metal ion exchange. When the fixer containing silver is passed through the cartridge, the iron in the steel wool or wire screen replaces the silver ions in the fixer. The silver then drops to the bottom of the cartridge as impure metallic silver sludge. The iron ions in the fixer are drained from the cartridge with the fixer into a drain or holding container (fig. AI-1).

In time, the filter material in the cartridge dissolves and the cartridge must be replaced. After about 80 percent of the steel wool is dissolved, the cartridge becomes inefficient and silver passes through the system. The cartridge is actually exhausted before the filter is completely dissolved. A metallic-replacement unit is capable of desilvering to a lower level than an electrolytic plating unit; therefore, some imaging facilities use electrolytic plating unit first and then send the solution through the metallic-replacement cartridge for final treatment.

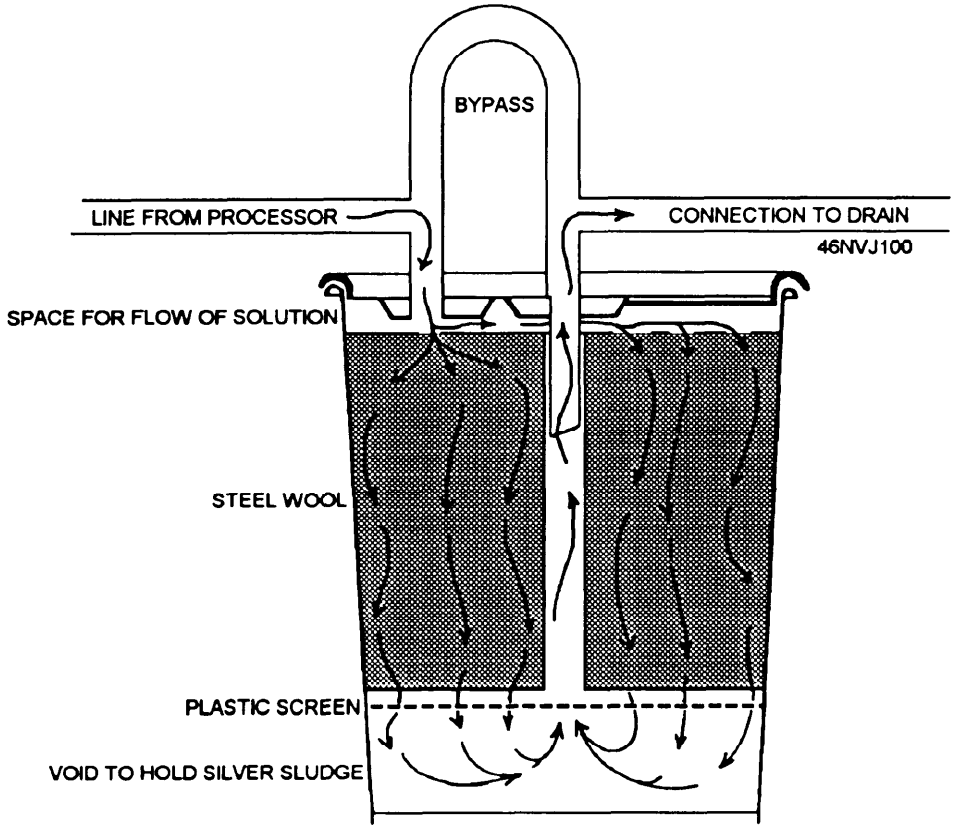

Figure AI-1.—Silver recovery cartridge.

ELECTROLYTIC PLATING

An electrolytic plating silver recovery unit is more complex than a silver recovery cartridge, but it is actually much easier to operate and control than the processing machines that generate the used solutions. The initial cost is higher than a cartridge; however, the cost is not exorbitant and the electrolytic plating unit should be considered as the primary means for recovering silver from fixers and bleach fixers. Navy imaging facilities are not charged for silver recovery equipment. Procedures for obtaining silver recovery equipment are located in the *Defense Reutilization and Marketing Manual (NOTAL),* DoD 4160.21-M.

The electrolytic plating method of silver recovery uses two electrodes: a cathode and an anode. They are placed in the silver bearing solution and an electric current is passed between them, causing almost pure silver to plate onto the cathode (fig. AI-2). The silver recovery capacity of the unit is determined by the direct current density and the size of the cathodes; that is, (amperes) in relation to the surface area of the cathode.

Tank size is another measure of recovery capacity. Smaller tanks have less plating capacity because of a proportionately smaller cathode surface area.

Agitation

An agitation or recirculation system provides a continuous supply of silver-laden solution to the cathode. Without this system, the current density would become too high for the amount of silver present in the solution near the cathode and result in the formation of silver sulfide. This silver sulfide decreases the efficiency of the unit.

Cathode Design

The cathodes in various electrolytic plating units vary in design. Some units have a simple flat plate; others may have several circular disks mounted on a shaft or use a rotating cylinder (fig. AI-3). Cathodes are made of metal and there are two types: flexible and nonflexible. The flexibility of the cathode makes it easy to remove the silver flake. Those cathodes that are not flexible can be tapped lightly on a flat surface to remove

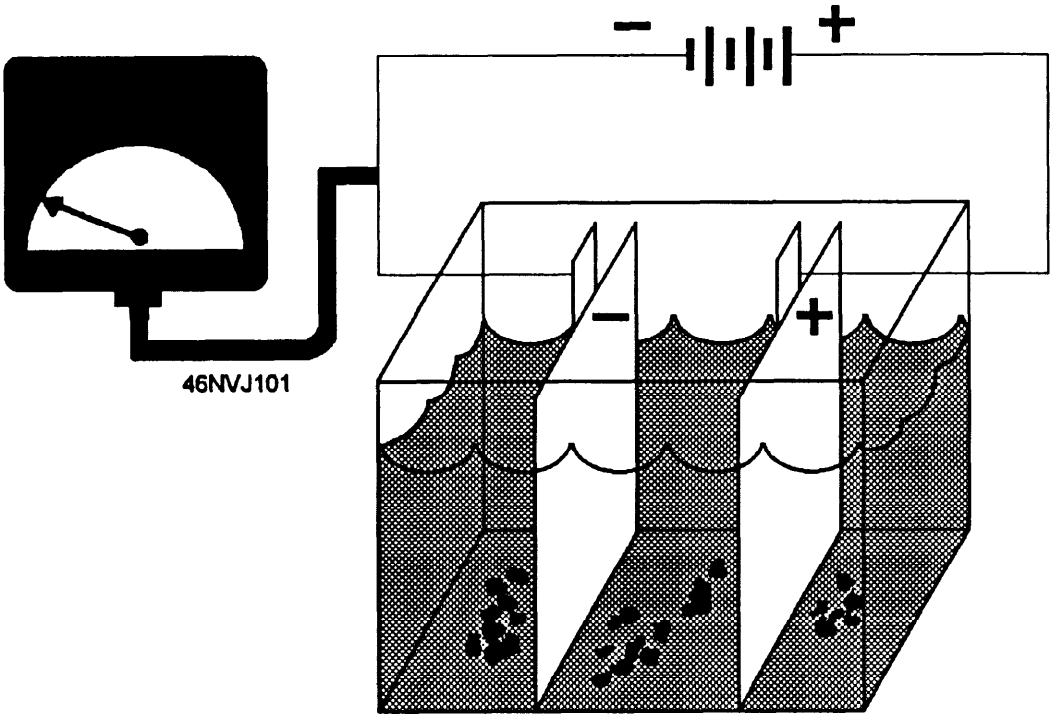

Figure AI-2.—Electrolytic recovery unit.

the silver flake, or the flake can be scraped off with a small putty knife.

SILVER RECOVERY FROM SCRAP FILM AND PAPER

The silver that remains in black-and-white film and paper after processing can also be recovered when the film and paper become scrap. When an imaging facility has a sufficient amount of black-and-white scrap, the value of the silver in it can be substantial.

Recovering silver from black-and-white film and paper scrap is more difficult than from solutions. This process requires equipment beyond the scope of Navy imaging facilities. Two factors make silver recovery difficult. First, the base must be removed; second, the silver is not in solution. Two basic methods are used to recover silver from scrap film and paper. One method is to burn the scrap, leaving a silver-rich ash. The other method is to remove the silver by a wet-chemical treatment. Both methods require further steps to separate the silver from the ash or the chemical solution.

The need to recover as much silver as possible has caused the Department of Defense (DoD) to set up a precious metals recovery program.

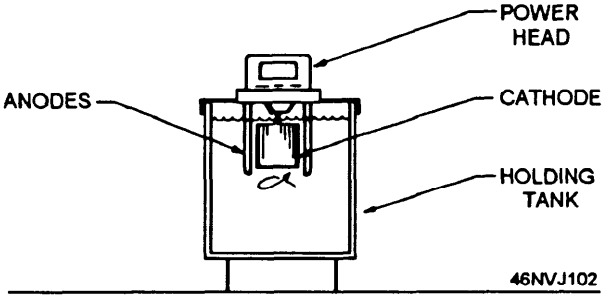

Figure AI-3.—Electrolytic unit with a rotating cathode.

PRECIOUS METALS RECOVERY PROGRAM

Within DoD there is a continuing requirement for precious metals in the manufacture ofdefense materials. Because of the diminishing supply of these precious metals from domestic sources and an effort to reduce the procurement cost of equipment containing precious metals, it has become necessary for DoD to establish a Precious Metals Recovery Program (PMRP). As a Photographer's Mate, you should be concerned with the recovery of silver. The requirements of the PMRP are set forth in the *Navy Precious Metals Program,*

NAVSUPINST 4570.23. Participation in the PMRP by all Navy imaging facilities is mandatory.

The Defense Reutilization and Marketing Service, Battle Creek, Michigan, is responsible for programs associated with the collection, recovery, and processing of precious metals. Navy imaging facilities turn in all silver or silver-bearing materials to their local Defense Reutilization and Marketing Office (DRMO). This may include scrap film and paper, used fixer, exhausted silver recovery cartridges, silver sludge, and silver flakes from electrolytic recovery units.

OBTAINING SILVER RECOVERY SUPPLIES AND EQUIPMENT

Requests for PMRP supplies, such as silver test paper, plastic collection containers, silver recovery cartridges, fittings, control valves, and replacement parts peculiar to silver recovery equipment, should be coordinated with your local DRMO. Personnel in DRMO will assist you in obtaining recovery equipment to start up silver recovery operations or to enhance the effectiveness of your current silver recovery operation. Arrangements can then be made for a facility survey to determine the specific requirements for on-site recovery equipment.

SECURITY

The manner in which a Navy imaging facility handles silver-bearing solutions, exhausted recovery cartridges, and silver sludge or flake is subject to security requirements outlined by local authority. As a minimum, however, the following security measures are suggested:

- Silver that has a high degree of purity should be stored in a safe or locked cabinet within a locked room. Bulky silver-bearing material, such as fixer and scrap film and paper, should be stored in a locked room.

- The weighing and measuring of silver-bearing materials should be accomplished by a designated weigher in the presence of a disinterested person and the initials of both persons should appear on the weight or inventory documentation.

NOTE: The same disinterested individual should not be permitted to sign for more than two consecutive accountings.

- Entry to an area where silver with a high degree of purity is stored temporarily should be restricted to a select group of personnel. Their names should be posted on an access list that is kept current, limited to people with a "need to know," and posted inside the entrance. Visitors with a "need to know" who are granted access be accompanied by an individual on the access list and be required to sign a register. Personnel on the access list do not require a security clearance.

- Persons entering areas where silver or silver-bearing material is stored should be made aware of "condition of entry" by signs located inside the entrance to the storage area.

APPENDIX II

BASIC OPERATOR TROUBLESHOOTING

With all the automated processing equipment used in Naval imaging today, it is important for you to have a working knowledge of basic trouble-shooting procedures. By having the ability to analyze a situation and perform some trouble-shooting steps, you are able to isolate problems that occur with imaging equipment. Your ability to locate a faulty condition quickly can play an important part in shortening the equipment downtime. Trouble-shooting procedures are useful for automated processors as well as cameras, enlarging equipment, and so on.

As equipment is used, the parts wear out, even with complete and competent maintenance. As this deterioration occurs, more variation occurs in functioning systems (the evenness of the air from one side of an air squeegee to the other, for example). Additionally, the larger, the more complex, and the older the piece of equipment, the higher the probability that it will malfunction.

TROUBLE-SHOOTING EQUIPMENT

To function correctly and efficiently, you must care for and maintain equipment properly. Maintenance should be performed consistently and according to established procedures. On complex equipment there are many adjustments that must be performed. Most of these adjustments are not difficult, particularly if you follow detailed 3-M system instructions and instructions supplied by the manufacturer.

DETECTING MALFUNCTIONS

Troubleshooting a continuous film processor, for example, is an action that evaluates the performance of the processor in terms of both operation and product quality. Each function on a system must operate the way it was designed. If it does not, some signs will become evident. The most common signs are detected as follows:

- Hearing. This sense is used to detect malfunctions that produce unusual sounds. Noisy malfunctions may include the improper meshing of gears, worn or improperly lubricated bearings, and loose or improperly lubricated drive chains. Some types of equipment have alarm systems or buzzers to warn the operator that a problem exists.

- Sight. At times, malfunctions are indicated long before they affect product quality. These malfunctions include those displayed on the processor control indicators (temperature, replenishment rates, and speeds) and by indicator lights. Other signs of trouble might include movements, such as a rising lift rod or even the presence of smoke. The first step to take in trouble-shooting circuits after securing power is to inspect the circuit visually. Check for loose connections, loose wires, abraded wires, and loose fittings. An overloaded circuit is a serious problem; at times, the electrical demand on a circuit can cause circuit fuses to blow or circuit breakers to trip. In some cases, incorrect sizes of fuses or circuit breakers were used and the wires overheated and burned off the insulation. This condition can cause shorts and grounds that become potential fire or electrocution hazards. Furthermore, some malfunctions can only be detected by visual examination of the finished product. These malfunctions include scratches, developing streaks, drying streaks, and so on.

- Touch. At times, the sense of touch is the best way to detect malfunctions. This is particularly true when total darkness is required to prevent image loss or with moving equipment parts enclosed in some type of housing. Usually, defective bearings or bushings or the need for lubrication of these parts that are concealed in a metal housing can best be detected by feeling for a buildup of heat or unusual vibrations.

- Smell. The sense of smell can be used to identify a problem with a piece of equipment. Smoke, hot electrical connections, and so on, may be identified more readily by smell than by sight.

TROUBLE-SHOOTING TABLES

Troubleshooting a processor or any other type of equipment is not a difficult task. Usually, the manufacturer identifies the most common operating malfunctions, their probable cause(s), and the

procedure(s) required to correct them. These are often produced in table form.

Most trouble-shooting tables are arranged in columns that list the trouble, the probable cause(s), and the remedy(ies) (table AII-1). Once the trouble is identified, you should refer to the table for the probable cause and then make necessary repairs or adjustments to correct the malfunction.

Another type of trouble-shooting table is the logic flow diagram. In a logic flow diagram, you simply "enter" the diagram and follow the arrows to various blocks or segments and perform the functions indicated or move on to the next segment in a prearranged, logical manner. A logic flow diagram is usually accompanied by other types of diagrams and instructions.

ELECTRICAL DIAGRAMS

The majority of imaging equipment is operated by electricity. To troubleshoot and perform maintenance on this equipment adequately, you must have a basic knowledge of electricity and be able to read electrical diagrams. You should spend a few moments studying

Table AII-1.—Trouble-Shooting Table for Electric Ranges

TROUBLE	PROBABLE CAUSE(S)	REMEDY(IES)
Range does not heat.	No voltage at outlet.	Correct voltage.
	Blown fuse.	Replace fuse.
	Open breaker.	Reset breaker.
	Broken wire in power cord.	Check continuity of cord.
	Faulty wall outlet.	Check for voltage at outlet.
	Faulty prongs on male plug.	Replace if necessary.
	Faulty slots in wall outlet.	Replace if necessary.
No heat at one surface burner.	Loose terminal connections at burner unit.	Clean and tighten connections.
	Corroded contacts in control switch.	Clean contacts with sandpaper.
	A burned-out element.	Replace element.
	Open in burner circuit.	Replace wires if necessary.
Surface burner too hot.	Incorrect or reverse connections.	Switch wires as required.
No heat in oven.	Element connections loose and corroded.	Clean and tighten connections.
Oven too cool.	Burned-out element or elements.	Replace elements.
Oven too hot.	Inoperative oven control.	Adjust or replace control.
Appliances fail to heat when plugged into appliance.	Inoperative oven control.	Adjust and replace control.
Uneven baking.	Range tilted.	Level range.
	Oven racks not on proper supports.	Place racks on proper supports.
Appliances fail to heat when plugged into appliance outlets.	Blown fuse.	Replace fuse.
	Loose and corroded circuit connections.	Clean and tighten connections.
	Broken circuit wires.	Replace wires.
	Faulty outlet.	Replace if necessary.

the circuit diagrams before you begin troubleshooting; this simplifies the task of isolating the trouble. When a circuit fails to function, you should use the logic diagram approach to locate the fault. The trial-and-error method of locating the fault(s) in a circuit is inefficient and time-consuming. If you have not been trained in electricity, you should read the Navy Electricity and Electronics Training Series (NEETS) Modules, particularly modules 2, 3, and 4. If you already possess knowledge about reading diagrams, the NEETS Modules can help you "get up to speed." Once you understand electrical diagrams, know prescribed maintenance and trouble-shooting procedures, and can use a voltmeter, you should be able to analyze and locate most of the faulty electrical components in imaging equipment.

When working with electricity, Sailors commonly refer to all electrical diagrams as "schematics." This, however, is not correct. A schematic is a specific type of diagram with characteristics of its own and with a specific purpose. Each of the different diagrams has a specific purpose and has distinguishable features that set it apart from the others. These diagrams may be used to do the following:

- learn the operation of a specific system
- locate the components of a system
- identify the components of a system
- trace a circuit
- troubleshoot equipment
- repair equipment

Pictorial Diagram

The simplest of all diagrams is the pictorial diagram. The pictorial diagram is a picture or sketch of the components of a specific system and the wiring between these components. This simplified diagram identifies components, even if you are not familiar with their appearance. This type of diagram does not show physical locations of components or the manner in which the wiring is marked or routed. It does, however, show you the sequence in which the components are connected (fig. AII-1). After studying the pictorial diagram, you should recognize the components and how they are connected to one another.

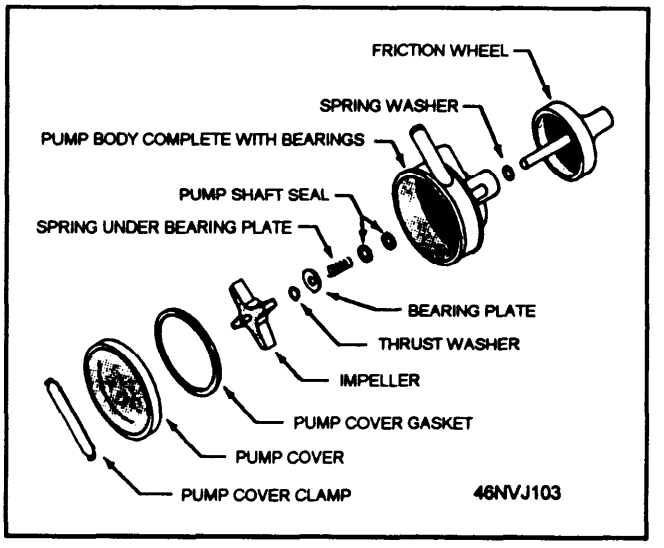

Figure AII-1—Pictorial diagram of a pump assembly.

Isometric Diagram

The purpose of an isometric diagram is to help you locate a component within a system. This type of diagram shows you the outline of a processor, printer, or other piece of equipment. Within the outline, the various components of a system are drawn in their respective (or relative) locations. The isometric diagram also shows interconnecting cables running between components (fig. AII-2).

Block Diagram

A block diagram (fig. AII-3) presents a general description of a system and its functions. This type of diagram is often used with accompanying text material. A block diagram shows the major components of a system and the interconnections of these components. All components are shown in block form and each block is labeled for identification purposes.

Single-Line Diagram

The single-line diagram (fig. AII-4) is used basically for the same purpose as the block diagram. When the single-line diagram is used with text material, it provides you with a basic understanding of the components and their functions in a system.

There are two major differences between the single-line diagram and the block diagram. The first difference is that the single-line diagram uses symbols, rather than labeled blocks, to represent components. Second, the single-line diagram is just that—all components are shown in a single line. There are no

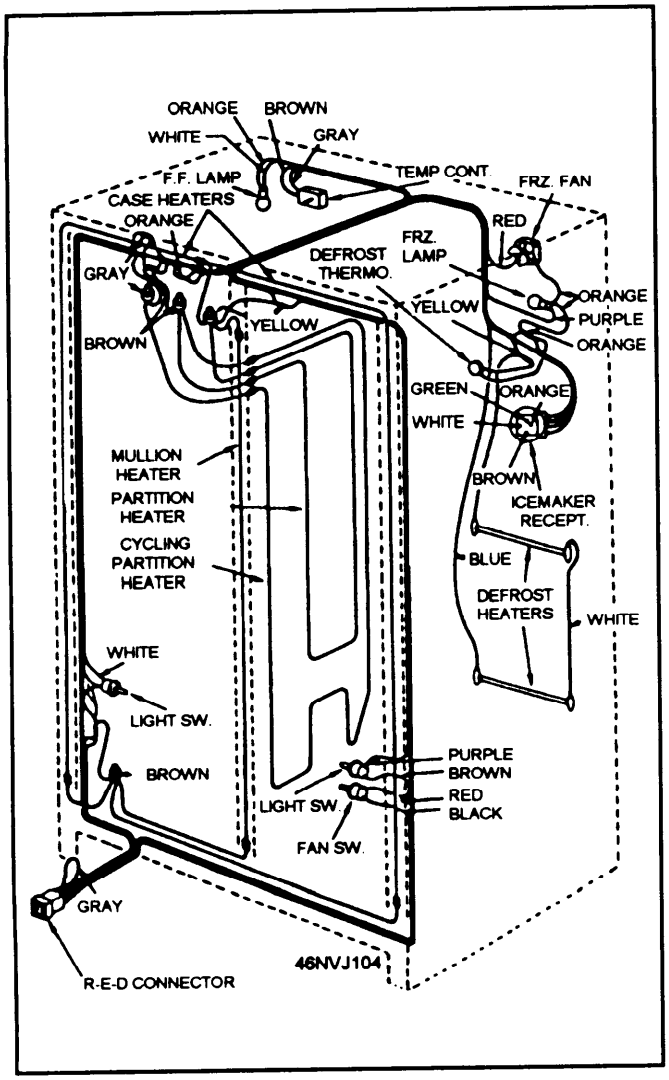

Figure AII-2.—Isometric wiring diagram of a refrigerator.

interconnections for selected components in a single-line diagram, as there are in a block diagram.

The single-line diagram is a simplified type of diagram and should be used primarily to understand, in broad terms, the function of each of the various components in the total system.

Schematic Diagram

A schematic diagram (fig. AII-5) uses graphic symbols to show both the electrical components and the functional organization of a circuit. You can use the schematic diagram to trace a circuit and its functions without regard to the actual physical size, shape, or location of the component devices or parts. A schematic diagram is most useful for learning the overall operation of a system.

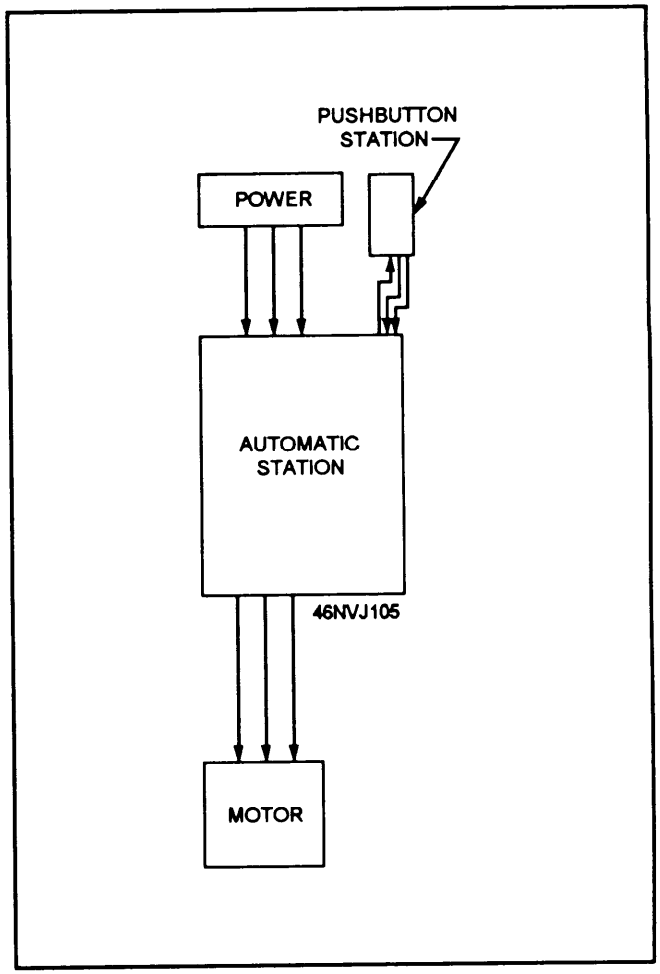

Figure AII-3.—Block diagram.

Wiring Diagram

A wiring diagram (fig. AII-6) is a detailed diagram of each circuit installation showing all of the wiring, connectors, terminal boards, and electrical or electronic components of the circuit. It also identifies wire by wire number or color code. Wiring diagrams are used to troubleshoot and repair electrical or electronic circuits.

The schematic diagram discussed previously should be used to determine the location where the trouble in the circuit could be when a malfunction occurs. However, the schematic diagram does not show the terminals, connector points, and so on, in the circuit. Therefore, you must use the circuit wiring diagram to determine where to make the voltage or resistance checks in the circuit.

Terminal Diagram

A terminal diagram is useful when connecting wires to terminal boards, relays, switches, and other

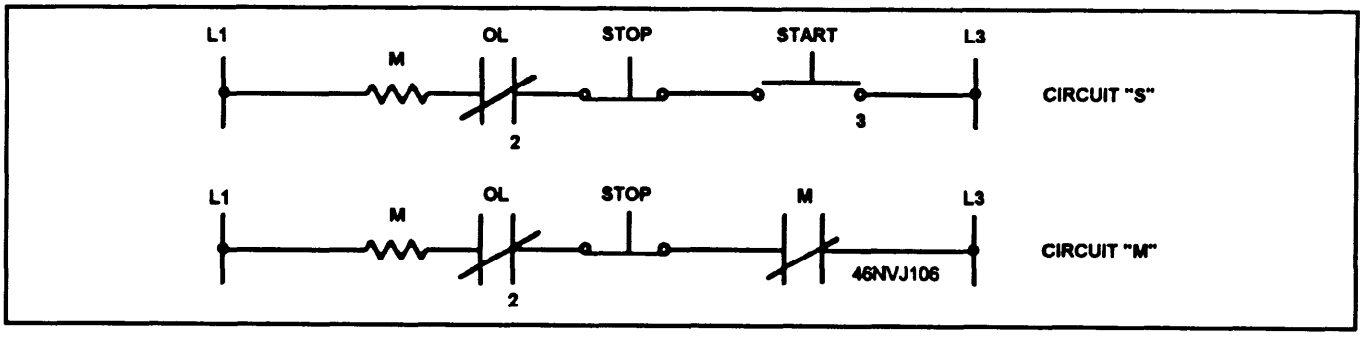

Figure AII-4.—Single-line diagram of a motor control circuit.

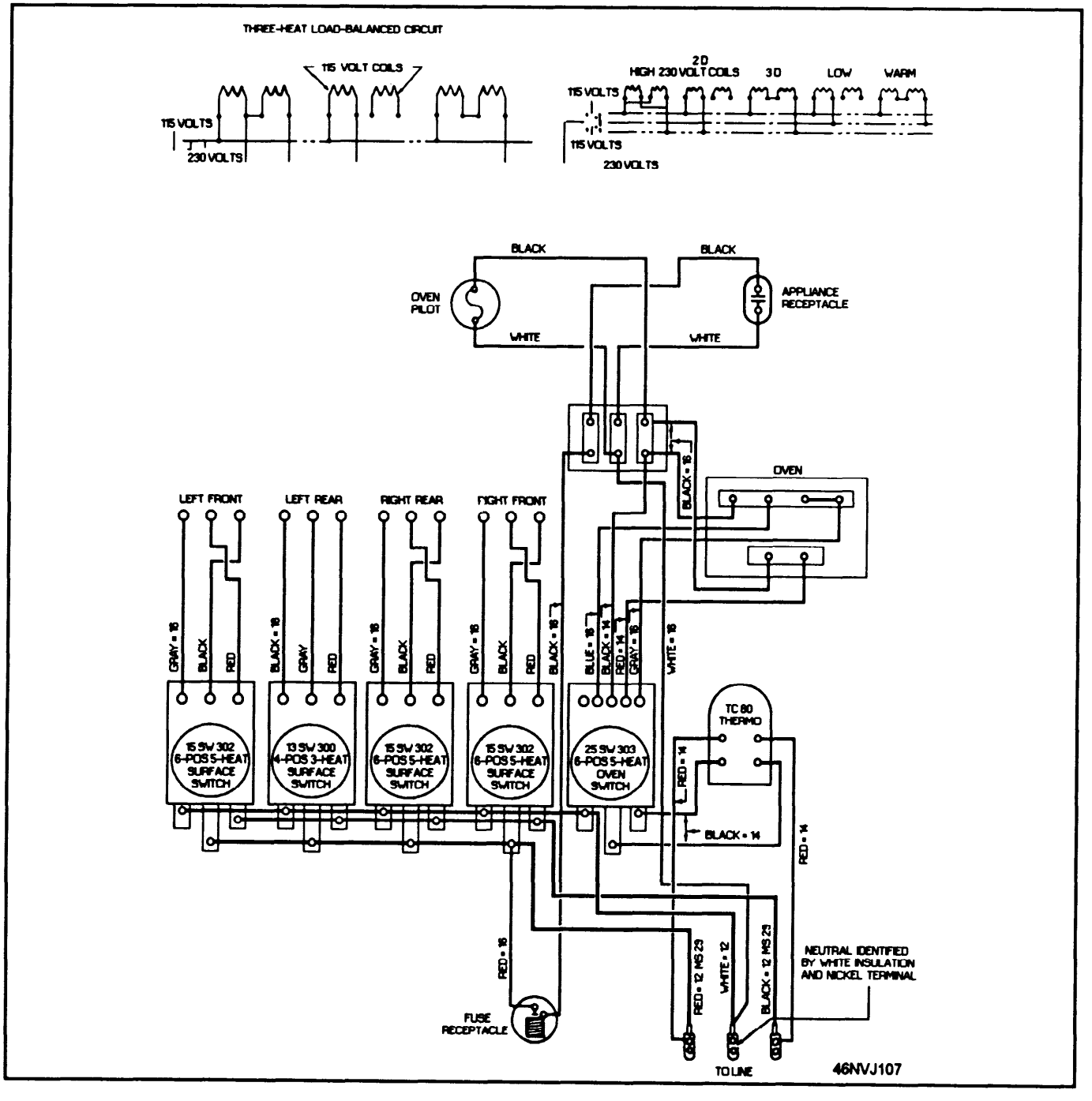

Figure AII-5.—Schematic diagram of an electric range.

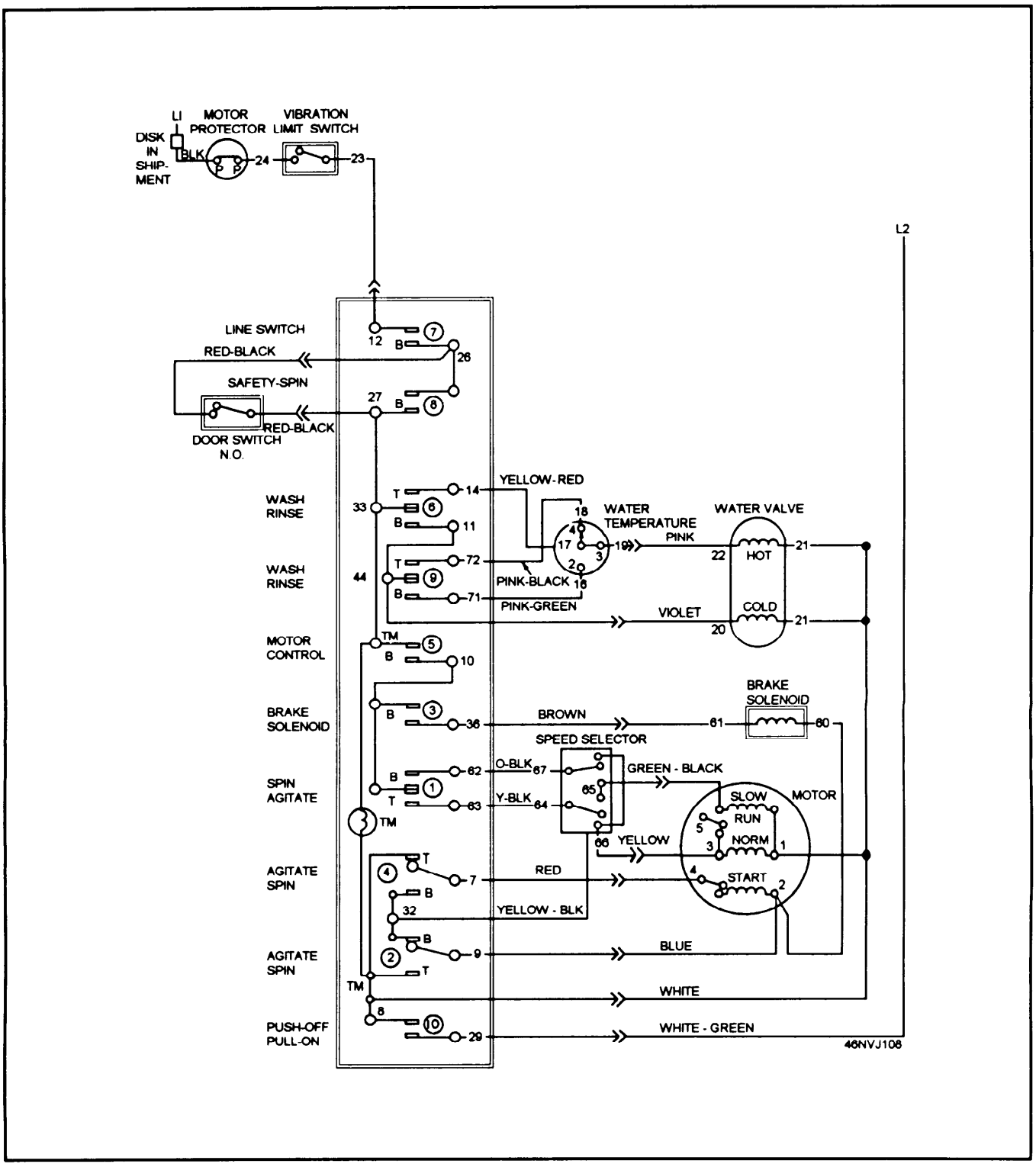

Figure AII-6.—Wiring diagram of a washing machine.

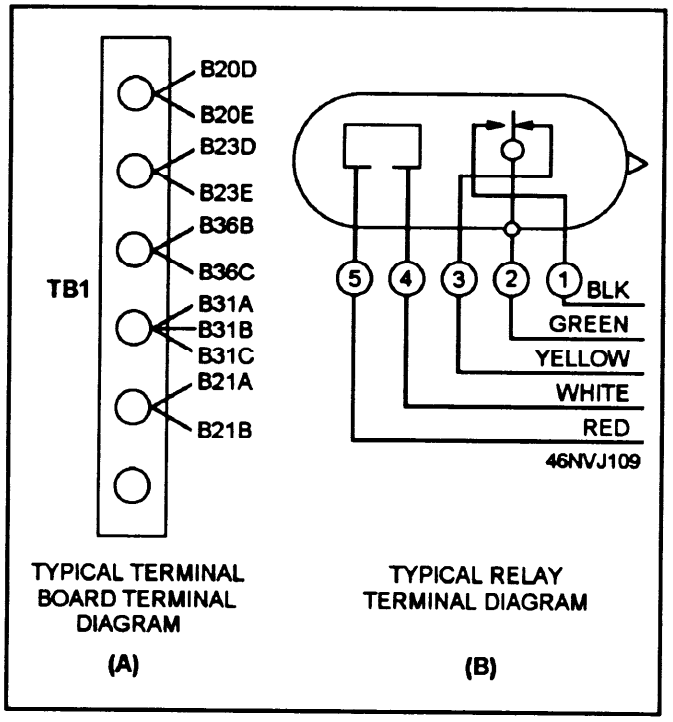

Figure AII-7.—Terminal diagram.

components of a circuit. Figure AII-7 shows two typical terminal diagrams: (A) shows the wire numbers connected to each terminal of a terminal board and (B) shows the color codes of the wires that are connected to a relay.

This has been a brief overview of trouble-shooting procedures and the use and interpretation of the various electrical diagrams. The diagrams discussed were selected because of their simplicity and ease of interpretation. Many diagrams you will encounter are far more complex. Begin with the simpler diagrams. Your proficiency in using the more complex diagrams will increase with experience.

APPENDIX III

REFERENCES USED TO DEVELOP THE TRAMAN

Reference	Chapter
Administration of Enlisted Flight Orders, BUPERSINST 1326.4, Bureau of Naval Personnel, Washington, DC, 1993.	4
Afloat Supply Procedures, NAVSUP Publication 485, Revision 2, Navy Department, Naval Supply Systems Command, Arlington, VA, 1993.	5
Cavuoto, James, and Stephen Beale, *Guide to Desktop Publishing*, Graphic Arts Technical Foundation, Pittsburgh, PA, 1992.	1,3
Data Processing Technician Second Class, NAVEDTRA 12511, Naval Education and Training Program Management Support Activity, Pensacola, FL, 1991.	3
Data Processing Technician Third Class, NAVEDTRA 10263, Naval Education and Training Program Management Support Activity, Pensacola, FL, 1987.	3
DeCock, Liliane, ed., *Photo Lab Index Lifetime Edition*, 41st ed., Morgan & Morgan, Inc., Dobbs Ferry, NY, 1990.	2
Defense Reutilization and Marketing Manual (NOTAL), DoD 4160.21-M, Department of Defense, Office of the Assistant Secretary of Defense Production & Logistics, Alexandria, VA, 1990.	APP II
Defense Intelligence Agency Manual, DIAM 55-5, Defense Intelligence Agency, Washington, DC, 1990.	4
Journalist 3 & 2, NAVEDTRA 12704, Naval Education and Training Management Support Activity, Pensacola, FL, 1994.	1
Larish, John, *Digital Photography: Pictures of Tomorrow*, Micro Publishing Press, Torrance, CA, 1992.	3
Larish, John, *Photo CD: Quality Photos at Your Fingertips*, Micro Publishing Press, Torrance, CA, 1994.	3
Mathematics, Volume 1, NAVEDTRA 10069-D1, Naval Education and Training Program Management Support Activity, Pensacola, FL, 1985.	2
NATOPS General Flight and Operating Instructions, OPNAVINST 3710.7, Office of the Chief of Naval Operations, Washington, DC, 1992.	4
Naval Visual Information Management and Operations Manual, OPNAVINS 5290.1 A, Office of the Chief of Naval Operations, Washington, DC, 1990.	1,4
Navy Precious Metals Program, NAVSUPINST 4570.23, Department of the Navy, Naval Supply Systems Command, Washington, DC, 1991.	APP II
Navy Electricity and Electronics Training Series, Module 4, *Introduction to Electrical Conductors, Wiring Techniques, and Schematic Reading*, NAVEDTRA B72-04-00-85, Naval Education and Training Program Management Support Activity, Pensacola, FL, 1992.	APP II

Reference	Chapter
Reporting of Missing, Lost, Stolen, or Recovered (MLSR) Government Property, SECNAVINST 5500.4, Department of the Navy, Office of the Secretary, Washington, DC, 1993.	5
Rosch, Winn L., *The Winn L. Rosch Hardware Bible*, 3d ed., Brady Publishing, Indianapolis, IN, 1994.	3
Stroebel, Leslie, et al, *Photographic Materials and Processes*, Focal Press, Stoneham, MA, 1986.	2
Supply Ashore, NAVSUP Publication 1, Volume II, Navy Department, Naval Supply Systems Command, Washington, DC, 1989.	5
Todd, Hollis N., and Richard D. Zakia, *Photographic Sensitometry*, Morgan and Morgan, Inc., Dobbs Ferry, NY, 1981.	2
Using Kodak Ektacolor RA Chemicals, Kodak Publication No. Z-130, Eastman Kodak Company, Rochester, NY, 1989.	2
Using Kodak Flexicolor Chemicals, Kodak Publication No. Z-131, Eastman Kodak Company, Rochester, NY, 1989.	2

INDEX

A

Aerial film speed (AFS), 4-16
Aerial photographic data computer, 4-18
Aerial photography, 4-1
  aerial cameras, 4-9
  aerial film speed (AFS), 4-16
  air-to-air photography, 4-5
  aircraft used for, 4-12
  camera depression angle, 4-2
  camera selection, 4-13
  captioning of, 4-40
  cartographic photography, 4-6
  categories of, 4-1
  communications, 4-27
  composition, 4-27
  data computer, 4-18
  determining exposure, 4-18
  duplication of aerial images, 4-39
  exposures required, 4-22
  film selection, 4-14
  filters for, 4-14,4-17
  flight lines, 4-22
  forward overlap, 4-20
  IFGA formula, 4-18
  inspection, preflight and postflight, 4-27
  interval between exposures, 4-23
  maritime surveillance, 4-33
  mission calculations, 4-18
  mosaic photography, 4-1
  motion media, 4-34
  oblique photography, 4-1
  pinpoint photography, 4-5
  process evaluation, 4-37
Aerial photography—Continued
  processing of 4-35
  reconnaissance photography, 4-6
  safety, 4-26
  scale, 4-20,4-24
  shooting hand held, 4-10
  side lap, 4-20
  stereo photography, 4-6
  strip photography, 4-6
  tilt angle, 4-1
  types of, 4-5
  vertical photography, 4-1
  weather conditions, 4-11
Afloat shopping guide, 5-5

B

Bit cell, 3-4

C

Cartographic photography, 4-6
Central processing unit (CPU), 3-2
Characteristic curve, 2-6
  emulsion latitude, 2-12
  exposure latitude, 2-13
  gamma, 2-13
  log exposure range, 2-12
  plotting, 2-8
  shoulder section, 2-12
  straight-line section, 2-12
  toe section, 2-9
Charge-coupled device (CCD), 3-8
Commodity oriented procurement systems (COPS), 5-7
Computer fundamentals, 3-1
  components of, 3-1
  general-purpose digital computers, 3-1

Computer fundamentals—Continued
input/output channels, 3-5
input unit, 3-2
memory, 3-1,3-4
modems, 3-6
peripheral devices, 3-2
program, 3-2
storage, primary and secondary, 3-4
Consolidated Master Cross-Reference List, 5-8
Contrast, 1-23,2-16
contrast index, 2-17
contrast index gauge, 2-17
gamma, 2-13
high contrast, 1-16
picture quality, 1-3, 1-5
summary lead, 1-18
Control charts, 2-23
alpha risk, 2-26
beta risk, 2-26
evaluation of, 2-28
interpretation, 2-28
limit lines, 2-26
Custody cards, 5-25

D

Densitometry, 2-3
Density, 2-5
Digital signal, 3-6
Digital camera, 3-8
Display prints, 1-8
DoD Consolidated Federal Supply Catalog, 5-5

E

Electronic image, 3-7
editing of, 3-15
ethics, 3-17
hardcopy output, 3-13
Electronic image—Continued
printers, 3-14
resolution of, 3-17
Electronic imaging, 3-1,3-7
computer configuration, 3-11
computer platform, 3-11
digital-image file storage, 3-13
displays, 3-12
five components of, 3-7
resolution of, 3-7
software, 3-15
transmitting, 3-17
Emulsion latitude, 2-12
Ethics pertaining to electronic images, 3-17
Exposure latitude, 2-13

F

Family of curves, 2-19
Feature pictures, 1-4
Feature assignments, 1-1, 1-4
picture quality, 1-3, 1-5
research, 1-5
Federal Supply Classification System, 5-3
Federal catalog system, 5-3
Fleet and industrial supply centers, 5- 1
Fleet hometown news (FHTN) pictures, 1-16
Floppy disk, 3-3
Forms and publications, 5-17

G

Gamma, 2-13,2-16
basic method, 2-13
gamma gauge, 2-14
mathematics computation, 2-13
General Services Administration (GSA), 5-7
GSA catalog, 507

H

Hard drive, 3-3
Hardware, 3-1,3-3

I

Illustrated Parts Breakdown (IPB), 5-8
Image compression, 3-13
Imprest funds, 5-18
Integrated circuits (IC), 3-4
Inventory, 5-23
  controlled equipage, 5-26
  custody cards, 5-25
  plant property, 5-25

K

Kodak digital camera system (DCS), 3-9

L

Log exposure range, 2-12
  maximum useful density, 2-12
  minimum useful density, 2-12
Logarithms, 2-3

M

Management List-Navy, 5-4
Maritime surveillance photography, 4-33
MILSTRIP, 5-12
MLSR government property, 5-26
Missing planning form, 4-35
Modems, 3-6

N

National stock number, 5-3
Navy stock list, 5-5
Navy stock list of publications and forms, 5-7
News writing, 1-17
  climax, l-17
  story ending, 1-19
News writing—Continued
  story body, 1-19
  story bridge, 1-19
  story lead, 1-18

O

Opacity, 2-4
Open purchase, 5-17

P

Peripheral devices, 3-4
  CD-ROM drive, 3-5
  keyboard, 3-4
  mouse, 3-5
  printer, 3-5,3-14
  scanner, 3-5,3-10
pH, 2-22
Photographic equipment list, 5-5
Photojournalism, 1-1
  display prints, 1-8
  feature assignments, 1-1, 1-4
  feature pictures, 1-4
  identifying information, 1-4
  impact, 1-3
  news writing, 1-17
  picture essay, 1-13
  picture layout, l-19
  picture seque rice, 1-9
  picture story, 1-9
  shooting script, 1-12
  spot news, 1-1
  writing text and cutlines, 1-13
Picture story, 1-9
  development of, 1-11
  shooting script, 1-12
Picture layout, 1-19
  composition, l-20

Picture layout—Continued
directional lines of force, l-20
primary optical area, 1-19
scaling, 1-21
unity, l-22
Picture sequence, 1-9
Picture essay, 1-13
Pixels, 3-7
Plant property, 5-25
Printers, 3-14
color copiers, 3-14
inkjet, 3-14
thermal-dye transfer, 3-14
thermal-wax transfer, 3-14

Q

Quality assurance, 2-1
characteristic curve, 2-6
chemical, 2-21
color, 2-30
control charts, 2-23
control strips, 2-6, 2-31
control in processing, 2-17
densitometry, 2-3
monitoring manuals, 2-31
sensitometry, 2-2

R

Random-access memory (RAM), 3-4
Read-only memory (ROM), 3-4
Reconnaissance photography, 4-6
Report of survey, 5-27
Requisition logbook, 5-23
Requisition forms, 5-11
DD Form 1149,5-11
DD Form 1250-1,5-11
DD Form 1250-2,5-11
Requisition forms—Continued
DD Form 1348,5-11

S

Scanners, 3-10
SCSI, 3-11
Secondary storage, 3-4
Semiconductor memory, 3-4
Sensitometer, 2-5
Sensitometry, 2-2
sensitometric strip, 2-5
step tablet, 2-6
Servmart, 5-16
Shipboard Uniform Automated Data Processing System (SUADPS), 5-11
Software, 3-2
Adobe Photoshop, 3-15
Aldus PhotoStyler, 3-15
applications, 3-2, 3-7
systems, 3-2, 3-6
utility progrms, 3-7
Specific gravity, 2-22
Speed point, 2-26
Spot news, 1-1
Still-video camera, 3-9
Stock record, 5-19
Stock control, 5-18
high and low limits, 5-21
Stowing materials, 5-18
hazardous materials, 5-18
security, 5-18
Surveys, 5-27

T

Tactical Air Reconnaissance Pod Systems (TARPS), 4-1, 4-7
Time temperature charts, 2-19

Time-contrast index curves, 2-19

Time-gamma index curves, 2-19

Transmission, 2-4

Transmitting digital images, 3-17

Trigradient tone reproduction, 4-39

U

Uniform Material Movement and Issue Priority System (UMMIPS), 5-15

W

Writing text and cutlines, 1-13