CHAPTER 8

SMALL ARMS

As a Master-at-Arms, you will be concerned with pistols, rifles, shotguns, grenade launchers, and machine guns. Your responsibility in the field of small arms is twofold. First, you must know how to assemble, disassemble, and maintain small arms. Second, you must be able to train other personnel in the operation, safe handling, and maintenance of small arms.

CHARACTERISTICS OF SMALL ARMS

LEARNING OBJECTIVES: Define the term *small arms.* Explain small arms nomenclature. Discuss the eight steps in the small arms cycle of operation.

Strictly defined, the term *small arms* means any firearm with a caliber (cal.) of .60 inch or smaller and all shotguns. Since there are no .60-cal. weapons in the Navy, all pistols, rifles, shotguns, and machine guns up through .50 cal. are small arms. For maintenance purposes, grenade launchers have also been included in the category of small arms. Such weapons are carried or mounted aboard ship for certain watchstanders and members of the ship's internal security force.

Small arms intended for match competition (match conditioned) are not covered in this text. They are not repairable at any level other than depot, such as the Naval Weapons Support Center, Crane, Indiana.

The majority of small arms are procured from the Army and issued by the Navy to its field activities and the Fleet. Maintenance on these small arms is performed in accordance with the applicable maintenance requirement cards (MRCs), but all other information (operation, troubleshooting, parts lists, etc.) is normally found in Army technical manuals (TMs) and field manuals (FMs). FMs and TMs list the spare parts, special tools, and organizational maintenance procedures for a weapon. The FM is the operator's manual and is intended for personnel in the field who must keep the weapon firing. Indexes of Army FMs and TMs are printed in Army pamphlets 310-3 and 310-4, respectively; OP O also lists TMs, FMs, and OPs pertaining to small arms.

Before we begin the study of the individual weapons, let us examine some of the quirks in small arms nomenclature (names of the parts). Generally, terminology pertaining to the weapons themselves is fairly standard because the Navy has adopted most of the Army's system of identification. For example, the Army used the letters *M* and *A* instead of the abbreviation Mk (mark) and Mod (modification), This means that "Carbine M1A2," in Navy language, is "Carbine Mk 1 Mod 2."

The diameter of a shotgun's bore is referred to as the gauge of the shotgun. Gauge (with the exception of the .410 shotgun) is not a measurement of inches or millimeters. Instead, it is the number of lead balls of that particular diameter required to make a pound. For example, if you measured the diameter of a 12-gauge shotgun's bore, you would find it to be 0.729 inch. If you were to make a number of lead balls of this diameter and weigh them, you would find that 12 of them make a pound.

So the larger the bore of a shotgun, the smaller the gauge number. A 16-gauge shotgun has a smaller bore than a 12-gauge.

CYCLES OF OPERATION

In every weapon, there is a cycle of operation. This cycle is a group of actions that take place upon the firing of one round and occur before the firing of the next round. In the automatic small arms currently used by the Navy, the sequence or manner of accomplishing these actions may vary between weapons of different design; however, they are always performed.

There are eight steps in the cycle of operation; they are shown in figure 8-1.

Feeding

Feeding places a round in the receiver just to the rear of the chamber. In its simplest form it amounts to putting a cartridge by hand in the path of the device that will chamber the round. Most often, feeding is accomplished by a spring-loaded follower in a magazine.

Magazines have a limited capacity and cannot sustain the continuous rate of fire required by machine guns. Therefore, machine gun ammunition is belted,

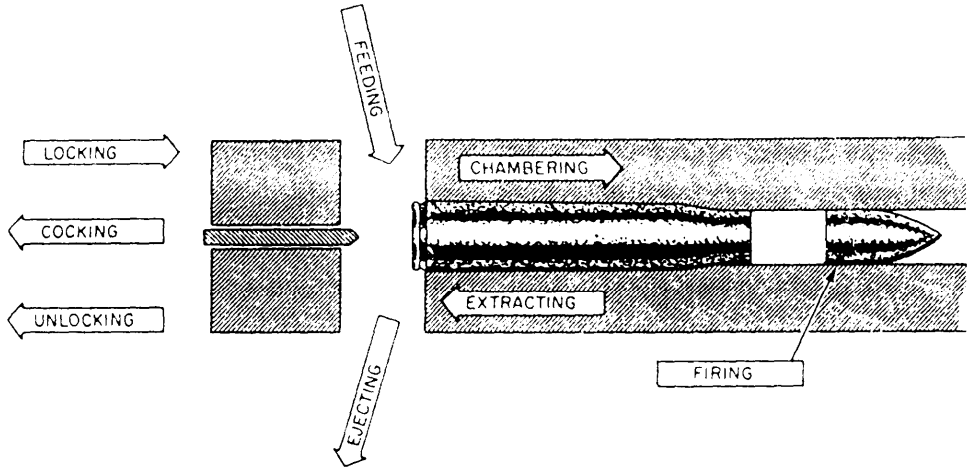

Figure 8-1.—The small arms cycle of operation.

and the rounds are fed to the rear of the chamber by cam and lever action.

Chambering

This action is required to ram a new round into the chamber. Again, in its simplest form, this amounts to placing the round there by hand. In military weapons, chambering takes place as the forward moving bolt strips the round from the feed mechanism and forces it into the chamber. The bolt closes on the cartridge and the extractor snaps into the extracting groove machined around the base of the cartridge case.

Locking

Locking holds the bolt in its forward position for a short period of time (after firing) to prevent the loss of gas pressure until unlocked by other forces. For low-powered weapons, it is possible to seal the breech for a short time by merely increasing the weight of the bolt. The bolt does start to move upon firing; but, if sufficiently heavy, it will not move far enough to release the gases until their pressure has been satisfactorily reduced. This method is used by submachine guns and other straight-blowback-operated small arms, such as the .22-cal. rimfire autoloading pistols.

Firing

Firing occurs when the firing pin strikes the primer of the cartridge.

Unlocking

Unlocking occurs after the firing of the round. Actions for unlocking are just the reverse of those required for locking, For most rifles, the first movement of the bolt is a rotating one, disengaging the locking lugs.

Extracting

Extracting is the process of pulling the empty case back out of the chamber. The extractor (normally a small hooked piece of metal encased in the bolt) snaps over the rim of the cartridge case when the round is chambered. As the bolt moves rearward after firing, the extractor hauls out the empty brass.

Ejecting

It is not only necessary to pull the cartridge case out of the chamber, but also to throw it free of the receiver. This action is called *ejection* and is created by placing a small projection on one side of the receiver so that, as the bolt and case move to the rear, the case will strike the projection and be expelled from the weapon. This method is used in the .45-cal. pistol. Another method of accomplishing this step is to incorporate a spring-loaded ejector in the face of the bolt. In this arrangement, the case is flipped from the weapon as soon as its forward end clears the chamber. This method is used in the M14 rifle.

Cocking

Cocking is the retraction of the firing mechanism (firing pin and hammer) against spring pressure so that there will be sufficient energy to fire the cartridge in the next cycle of operation. The firing pin, hammer, or, in some cases, the bolt itself is held in a cocked position by a piece called the sear.

Again, firing is initiated by squeezing a trigger. This movement trips the sear, releasing the firing mechanism (firing pin, hammer, or in automatic weapons such parts as the bolt group or slide), causing it to move forward with enough force to discharge the round.

AUTOMATIC AND SEMIAUTOMATIC FIRING SYSTEMS

LEARNING OBJECTIVES: Explain the difference between automatic and semiautomatic firing systems. Identify and explain the three basic types of operation for small arms weapons. Distinguish between range and rates of fire.

A semiautomatic weapon unlocks, extracts, ejects, cocks, and reloads automatically, However, the trigger must be pulled each time to fire around. By this definition, the .45-cal. M1911A1 pistol is semiautomatic, though often called automatic. A fully automatic weapon keeps on firing as long as the trigger is kept pulled.

Two examples of weapons that can be find both automatically and semiautomatically are the 7.62-mm M14 rifle and the 5.56-mm M16 rifle.

SMALL ARMS OPERATING PRINCIPLES

Automatic and semiautomatic weapons are classified on the basis of how they obtain the energy required for operation. Fundamentally, small arms obtain energy from the forces that accompany the explosion created when a round of ammunition is fired. The use of these forces does not reduce the effectiveness of the weapon, but uses otherwise wasted energy.

There are three basic types of operation for semiautomatic and automatic small arms weapons: gas operated, recoil operated, and blowback operated. Figure 8-2 shows the three methods.

Gas-Operated Weapons

In gas-operated weapons, a portion of the expanding powder gases behind the bullet are tapped off into a gas cylinder located beneath the barrel. (The hole connecting the barrel and cylinder is near the muzzle end.) As the bullet passes this hole, gases push a piston rearward. The piston is connected by a rod to an operating mechanism of the weapon, such as the bolt. The piston carries the bolt aft with it, unlocking the bolt, extracting and ejecting the ammunition, and cocking the weapon.

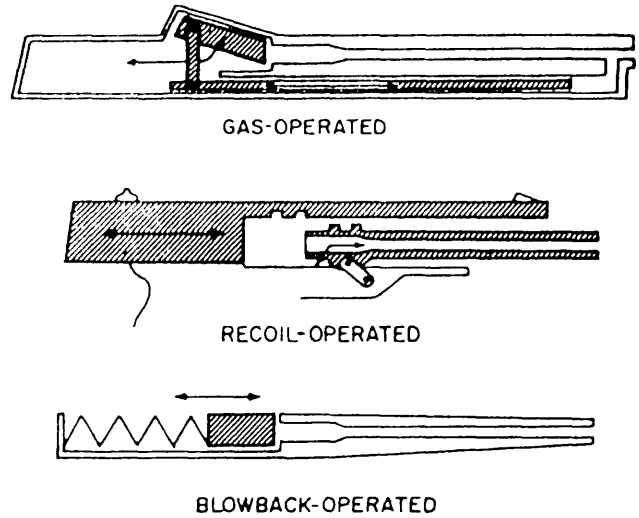

Figure 8-2.-Types of operation for semiautomatic and automatic small arms weapons.

Recoil-Operated Weapons

As a round is fired, high pressures develop behind the bullet and force it down the barrel. The force behind the bullet is also directed rearward against the breech. If the barrel and bolt are secured to one another, the entire force of recoil is felt on the shooter's shoulder. But, by design, the barrel and breech assembly slide in the frame so that the rear moving assembly maybe used to compress springs or move levers, which completes the cycle of operation.

Generally, in recoil-operated weapons, the barrel and the bolt move rearward together for a short distance. Then the barrel is stopped and the bolt (now unlocked) continues to the rear against spring pressure until the empty case is ejected. The force of recoil is also used to cock the weapon and compress the spring, returning the bolt to its firing position and cambering a new round in the process.

Blowback-Operated

There are similarities between recoil-operated and blowback-operated weapons. But there are several major differences. In recoil operation, the bolt and barrel are locked together until the bullet has left the barrel, and most of the recoil thrust is spent. The combined thrust of the recoiling barrel, bolt, and some other parts is used to operate the weapon. In blowback

(inertia) operation, however, the bolt is not locked to the barrel and in most cases the barrel does not recoil, The bolt is held closed by spring pressure and the mass of the breechblock. The initial blow of the exploding cartridge starts the bolt moving rearward, but the weight of the bolt is such that it does not allow the chamber to be entirely opened until the round has left the bore. Action by a recoil spring returns the bolt to the closed position, cambering a new round.

Range and Rate of Fire

Some other important terms that apply to small arms describe their range and rate of fire. The range of a weapon is stated in terms of *maximum range* and *maximum effective range.* The rate of fire of an automatic weapon is stated in terms of *cyclic rate of fire* or *sustained rate of fire.*

MAXIMUM RANGE— The greatest distance the projectile will travel.

MAXIMUM EFFECTIVE RANGE— The greatest distance at which a weapon may be expected to fire accurately to inflict damage or casualties.

CYCLIC RATE OF FIRE— The maximum rate at which a weapon will fire in automatic operation, stated in rounds per minute (RPM).

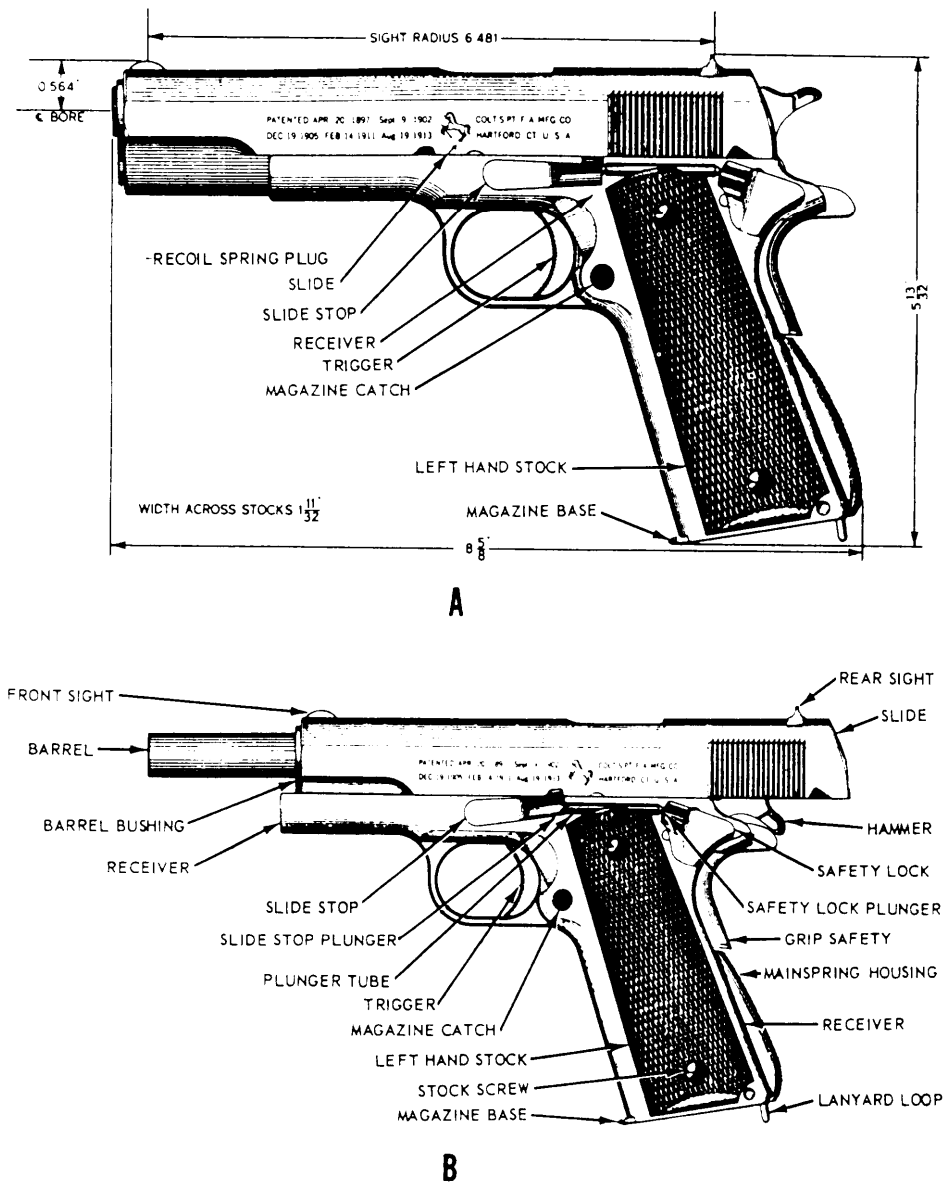

Figure 8-3.-.45-cal. M1911A1 semiautomatic pistol: A. Slide closed; B. Slide open.

SUSTAINED RATE OF FIRE— The sustained rate of fire of a weapon is normally stated in a chart. The chart correlates the average number of rounds fired per minute with the number of minutes this rate can be sustained without damage to the weapon.

HANDGUNS

LEARNING OBJECTIVES: Identify the two standard issue handguns used by the Navy. Describe the .45-cal. pistol and the steps required in disassembly and reassembly. List and describe the four safeties on the .45-cal. pistol. Describe the operation of the .38-cal. revolver and list the steps in disassembly and reassembly.

There are two standard issue handguns used by the Navy today: the .45-cal. semiautomatic pistol and the .38-cal. S&W revolver. The information presented in this chapter is primarily concerned with the .45-cal. pistol and the .38-cal. S&W revolver.

M1911A1 .45-CALIBER PISTOL

The .45-cal, M1911A1 pistol is a recoil-operated, semiautomatic, magazine-fed, self-loading handgun with fixed sights. It is often called a .45-cal. semiautomatic pistol (SAP) or a .45-cal. autoloading Colt (the manufacturer) pistol (ACP). This text will refer to it as a .45-cal. pistol. Figure 8-3 shows the pistol with nomenclature for some of the external parts.

The magazine holds seven rounds when fully loaded; one round is fired with each squeeze of the trigger. Rifling in the barrel is machined for a left-hand twist (the only Navy weapon with left-hand rifling). Empty, the pistol weighs approximately 2-1/2 pounds. It has a maximum range of a little over 1,600 yards and a maximum effective range of about 50 yards.

Disassembly

Care of the pistol includes daily preventive maintenance, prefiring cleaning, and postfiring cleaning. For daily maintenance the pistol need not be disassembled; but, for the prefiring and postfiring cleaning, the pistol should be disassembled.

There are two phases of disassembly for the pistol: general disassembly (field-stripping) and detailed disassembly. General disassembly (fig. 8-4)

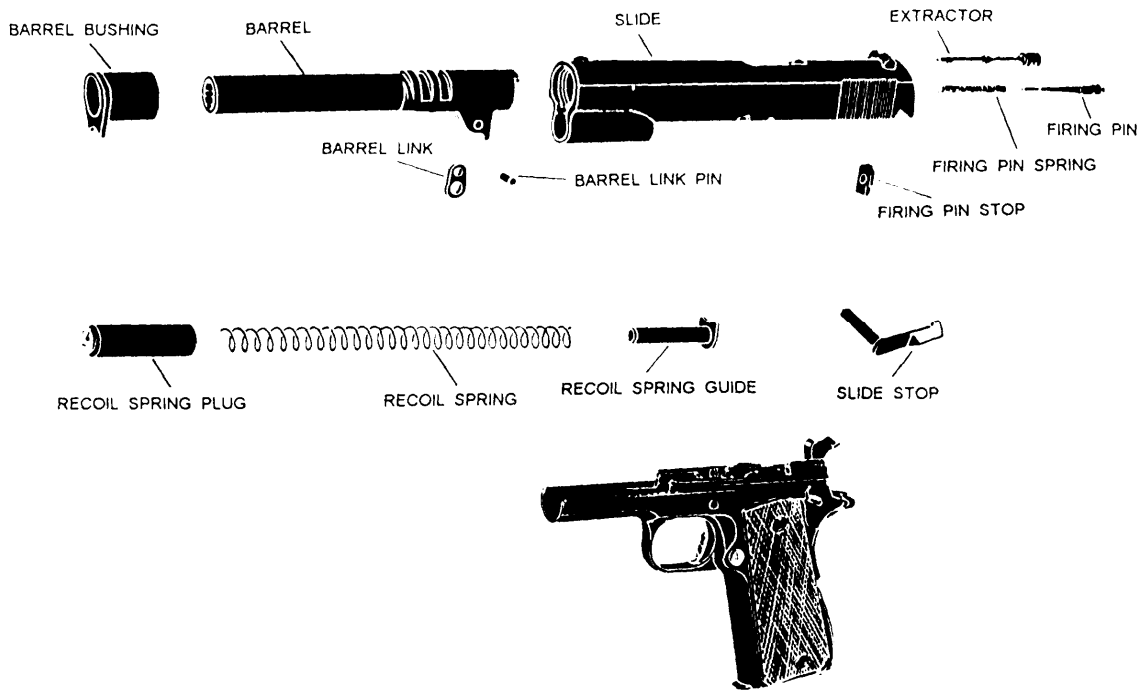

Figure 8-4.-General disassembly (field-stripping) of the .45-cal. pistol.

is the disassembly necessary for normal care and cleaning, and after the weapon has been fired. This is the extent of disassembly that is generally explained to personnel such as watchstanders. The detailed disassembly of the receiver group (fig. 8-5) is the job of the Gunner's Mate during periodic cleaning and repair. Detailed disassembly is not currently called for in any 3-M system MRCs. However, it is a very good idea to perform a detailed disassembly and cleaning after heavy use, such as security force range qualifications.

To do a good job of cleaning and repair, it is essential that you know the names of the parts of the weapon. The nomenclature of parts of the pistol should be learned while practicing disassembly and assembly. As each part is removed and replaced, the nomenclature is repeated until known. While studying the disassembly and assembly of the pistol, refer to the illustrations showing the parts by name and description. Become thoroughly familiar with the parts and their functions. Knowing the names of the parts will also help you understand the operation of the weapon.

GENERAL DISASSEMBLY (FIELD-STRIPPING).— Before performing any work on the pistol, remove the magazine, pull the slide to the rear, and inspect to see that the weapon is clear. Then perform the following steps:

1. Cock the hammer and put the safety lock in its up (SAFE) position. Depress the recoil spring plug and turn the barrel bushing about a quarter-turn clockwise, This releases the tension on the spring. Allow the spring to expand slowly, under control, to prevent injury or loss of parts. Turn the recoil spring plug counterclockwise and remove it from the recoil spring. Move the safety lock back down to its FIRE position.

2. Draw the slide to the rear until the halfmoon recess (on the slide) is directly above the projection on the slide stop. Push out the slide stop from right to left.

3. Turn the pistol upside down and draw the receiver to the rear, disengaging it from the slide. Lay the receiver down.

4. Draw the recoil spring and its guide to the rear and out of the slide.

5. Take the barrel bushing out of the slide by turning it counterclockwise as far as it will go, then lifting up.

6. Lay the barrel link forward and pull the barrel out of the muzzle end of the slide.

7. Take out the firing pin by pressing on the rear of the firing pin with any pointed object until you can slide out the firing pin stop. Keep your fingers over the firing pin, allowing the spring tension to ease; then lift both firing pin and spring from the slide.

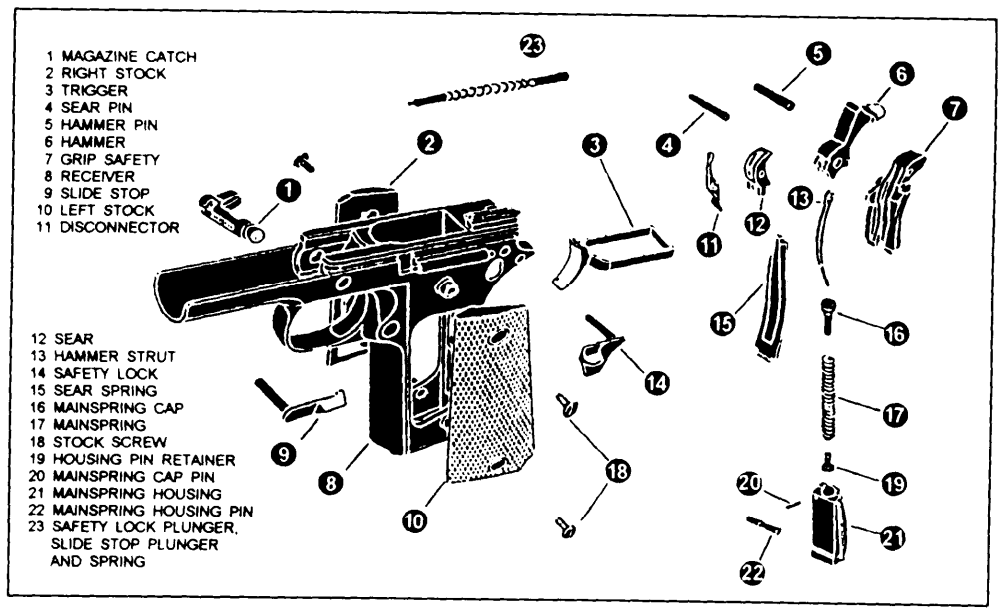

Figure 8-5.—Detailed disassembly of the .45-cal. pistol receiver group.

8. Pry the extractor out of the rear of the slide.

Assembly

To reassemble the weapon, perform the disassembly procedures in reverse order. You want to remember that all pins go in from left to right.

Safeties

There are three safety features and one positive safety on the .45-cal. pistol. The three safety features are the half-cock notch, the grip safety, and the disconnector. The positive safety is the safety lock (sometimes called the thumb safe).

The safety lock positively locks the slide in the forward position. In addition, a stud on the safety lock (fig. 8-6, view A) blocks the shoulders of the sear to prevent any movement of the sear out of the full-cock notch of the hammer.

The half-cock notch is the notch just above the full-cock notch. It has a lip, which prevents movement of the sear from that notch when pressure is applied to the trigger. (See fig. 8-6, view B.)

The grip safety (fig. 8-6, view C) indirectly stops any movement of the sear by blocking trigger movement. If the trigger cannot be actuated, the sear cannot move and the hammer will not fall.

The disconnector and sear (fig. 8-6, view D) prevents firing unless the slide is fully forward and locked. Any time the slide is not fully forward, the nose of the disconnector is forced downward. In this condition the disconnector spade does not contact the sear when the trigger is pulled. When the trigger is pulled, the disconnector will be pushed to the rear; but the sear remains in position, holding the hammer to the rear.

When the slide is forward, the disconnector rides up into a recess on the underside of the slide. The spade of the disconnector (dark area) bears against lugs on the sear. When the trigger is pulled, the trigger yoke pushes back against the disconnector spade, which transmits the motion to the sear, rotating the sear nose out on the full-cock notch of the hammer, and the weapon fires.

Cycle of Operation

Refer to figures 8-3, 8-4, and 8-5 as we explain the functions of the pistol. We will assume that a loaded magazine is in the weapon, a round is in the chamber, the grip safety is depressed, and the trigger

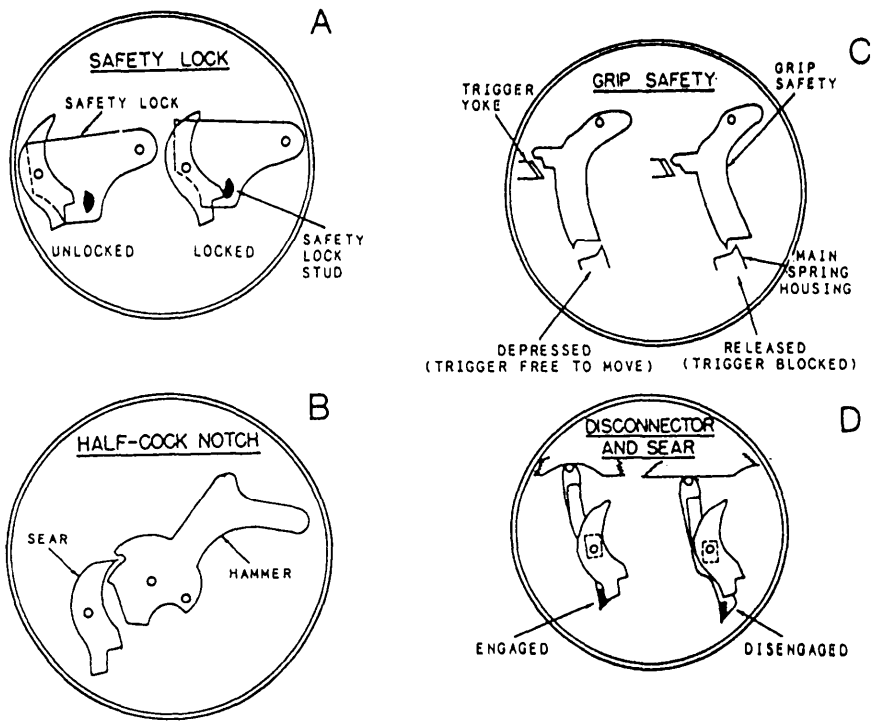

Figure 8-6.—Safeties on the .45-cal. pistol.

has been squeezed and the round fired. The cycle of operation now begins. The cycle of operation has been addressed earlier in this chapter. For more information on the M1911A1 .45-cal. pistol refer to U.S. Army TM 9-1005-211-12.

THE .38-CALIBER REVOLVER

You will find the .38-cal. S&W revolver (fig. 8-7) in armories ashore, where it is used by personnel assigned to guard or police duties. Because it is lighter than the .45-cal. pistol, the .38-cal. revolver is frequently issued to flight personnel. This weapon has about the same maximum and effective ranges (1600 and 50 yards, respectively) as the .45-cal. pistol. Figure 8-8 shows the revolver disassembled to the extent usually required for normal care.

Operation

In this discussion, operation of the revolver is limited to loading, firing, and unloading. To load the revolver, swing the cylinder out by pushing forward on the thumbpiece and applying a little pressure on the right side of the cylinder. The thumbpiece will not release the cylinder if the hammer is cocked.

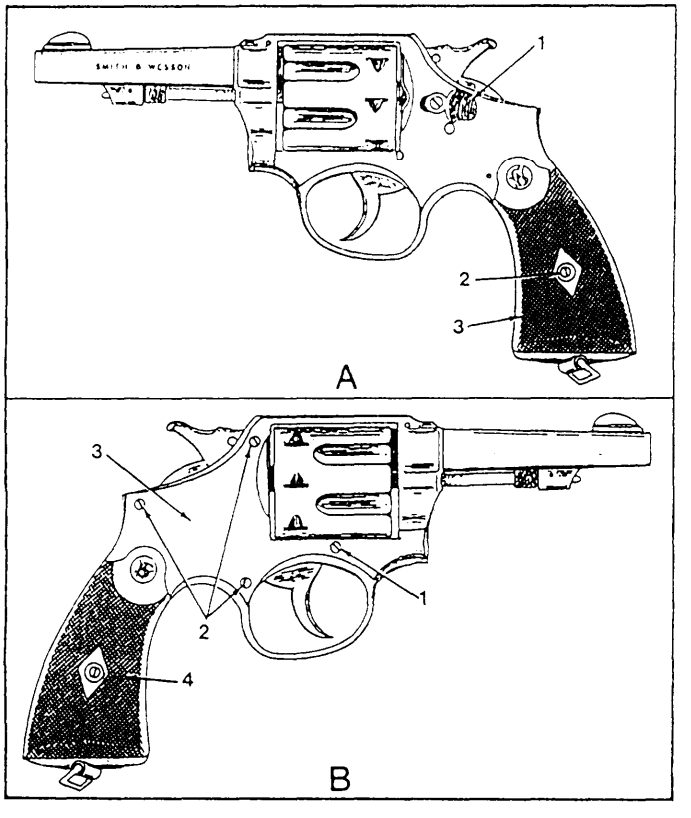

Figure 8-7.—The .38-cal. special Smith and Wesson revolver: A. Left side- (1) thumbpiece (cylinder release), (2) stock screw, (3) stock; B. Right side- (1 and 2) sideplate screws, (3) sideplate, (4) stock.

NOTE

The cylinder should not be flipped out sharply because this can cause the crane to be bent, throwing the cylinder out of timing and/or alignment.

Insert a round in each of the cylinder's six chambers, and swing the cylinder back into position. The weapon is now loaded and ready to be fired.

The revolver can be fired by single or double action. For single-action firing, the hammer is pulled back with the thumb to the full-cock position for each round. This action also rotates the cylinder. The hammer is held in the cocked position by the sear until released by the trigger. In double-action firing, pulling the trigger causes the hammer to be raised to nearly its full-cock position. The hammer strut will then escape the trigger, and the spring-loaded hammer will fall and strike the cartridge. In double-action firing, the cylinder is rotated by pulling the trigger. Since it requires considerably less trigger pull for single action, this method should produce better accuracy.

The empty cartridges are ejected by swinging out the cylinder to the left and pushing the ejector plunger toward the rear of the cylinder, There are two built-in safeties on this revolver the hammer block and the rebound slide. The hammer block prevents the hammer from going far enough forward to strike the cartridge primer when both the hammer and the trigger are in the forward or uncocked position. Thus, if the revolver were dropped or otherwise struck on the hammer, the round would not be fired. The rebound slide actuates the hammer block to prevent the hammer from traveling far enough to strike the primer should the hammer slip from the thumb while being manually cocked.

Disassembly and Assembly

To disassemble the revolver, do the following:

1. Remove the stock screws and lift off the stocks. (See figure 8-7.)

2. Push forward on the thumbpiece (No. 1 in figure 8-7, view A), which actuates the cylinder latch, and

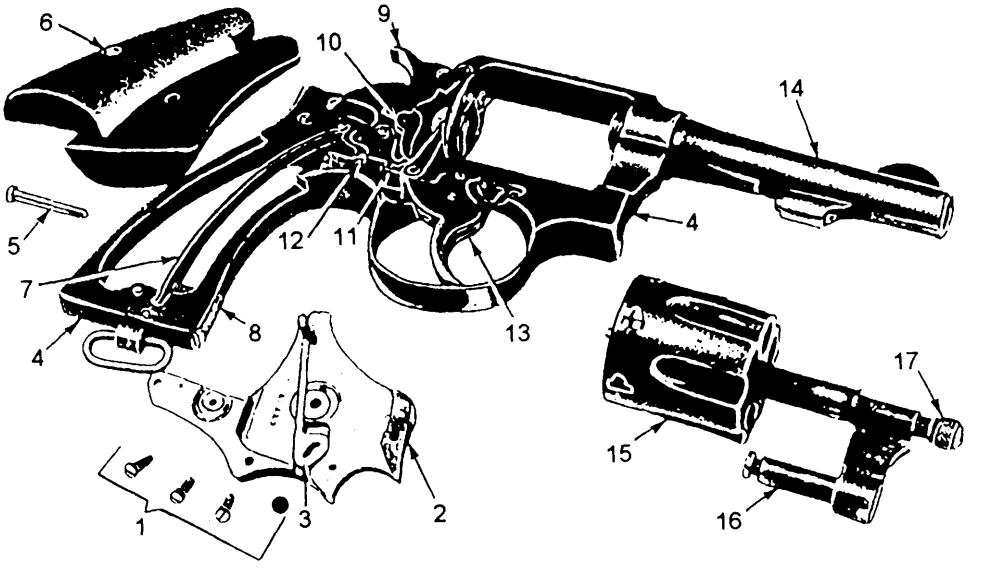

1. Sideplate screws
2. Sideplate
3. Hammer block
4. Frame
5. Stock screw
6. Stocks
7. Mainspring
8. Mainspring strain screw
9. Hammer
10. Sear
11. Rebound slide
12. Hammer block pin
13. Trigger
14. Barrel
15. Cylinder
16. Crane or yoke
17. Ejector plunger

Figure 8-8.—The .38-cal. Smith and Wesson revolver, completely disassembled.

swing the cylinder out to the left. With a small screwdriver, remove the sideplate screw (No. 1 in figure 8-7, view B) located directly under the cylinder. This screw retains the crane (or yoke) of the cylinder and ejector group.

3. Remove the cylinder and ejector group by pulling the ejector forward.

4. Remove the three remaining sideplate screws (No. 2 in figure 8-7, view B).

5. Remove the sideplate. (Do not use excessive force.)

6. If the revolver has a hammer block that fits over a pin in the rebound slide, remove the hammer block. If the revolver has the type of hammer block that is staked to the sideplate (early models), removal is not required.

To reassemble the weapon, if the hammer block has been removed, place the hole in the hammer block over the hammer block pin (No. 12 in figure 8-8) so that the "L" projection of the hammer block will fit between the hammer and the frame. Assemble the sideplate, making sure the hammer block fits in the recess in the sideplate (do not force). Install the remaining parts, following the reverse order of disassembly.

For further information on the .38-cal. revolver, refer to U.S. Army TM 9-1005-206-14&P-1.

SHOULDER WEAPONS

LEARNING OBJECTIVES: Describe the operation of the M14 and M16 rifles in terms of controls, loading, and unloading. Explain the routine maintenance procedures for the M14 and M16 rifles.

Shoulder weapons are designed to be held with both hands; they are braced against the shoulder to absorb the force of recoil and to improve accuracy. Included in this group are the M14 and M16 rifles.

M14 RIFLE

The M14 rifle (fig. 8-9) is a lightweight air-cooled, gas-operated, magazine-fed shoulder weapon. It is designed for semiautomatic or full automatic fire at the cyclic rate of 750 rounds per minute. The rifle is chambered for 7.62-mm cartridges and is designed to accommodate a 20-round cartridge magazine, the M2 rifle biped (fig. 8-10), and the M6 bayonet (fig. 8-11).

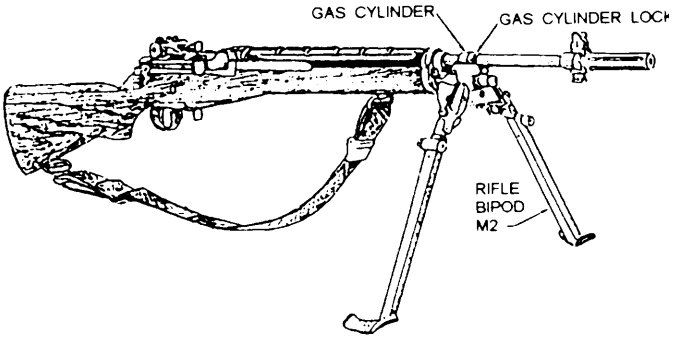

Figure 8-10.—The 7.62-mm M14 rifle with bipod installed.

M14 Rifle Controls

Figure 8-12 shows an M14 rifle equipped with a selector for automatic operation. Position it as in A for automatic fire and as in B for semiautomatic fire. In firing for semiautomatic fire, squeeze the trigger for each round fired. For automatic fire, squeeze the trigger and hold. Most of the M14 rifles issued to the Navy will not be equipped with the automatic selector, so only semiautomatic fire will be possible.

The safety is shown in figure 8-9. To prevent firing, press the safety back from in front of the trigger guard. To permit firing, press it forward from inside the trigger guard.

If a magazine is in the rifle, press the magazine latch (fig. 8-13) and remove the magazine. Pull the operating rod handle (fig. 8-9) all the way to the rear and check to see that the weapon is free of ammunition. Then ease the operating rod forward to the locked position and move the safety (fig. 8-9) to the rear (safe position).

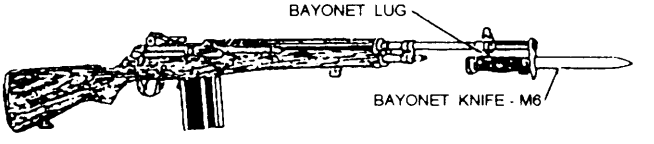

Figure 8-11.—The 7.62-mm M14 rifle with the M6 bayonet knife attached.

There are two methods of reloading an empty magazine. Figure 8-14 shows the method with the magazine in the rifle. (This method should only be used in the field, since it creates a possible accidental firing situation.) After the last round is fired from a magazine, the magazine follower will engage the bolt lock and hold the bolt in the rear position. If this fails to happen, make sure you do not have a misfire, then pull the operating handle to the rear and manually depress the bolt lock (located on the left side of the

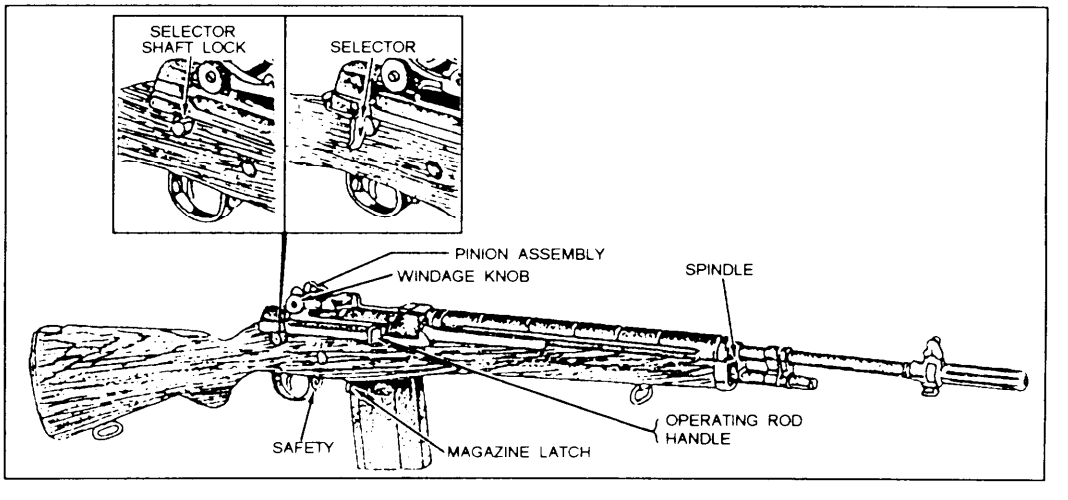

Figure 8-9.-The 7.62-mm M14 rifle and controls - right-front view.

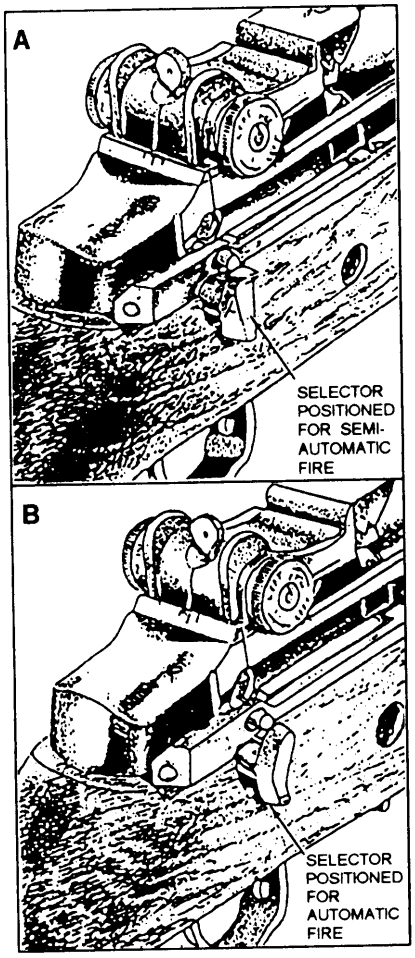

Figure 8-12.-Selector for automatic and semiautomatic fire.

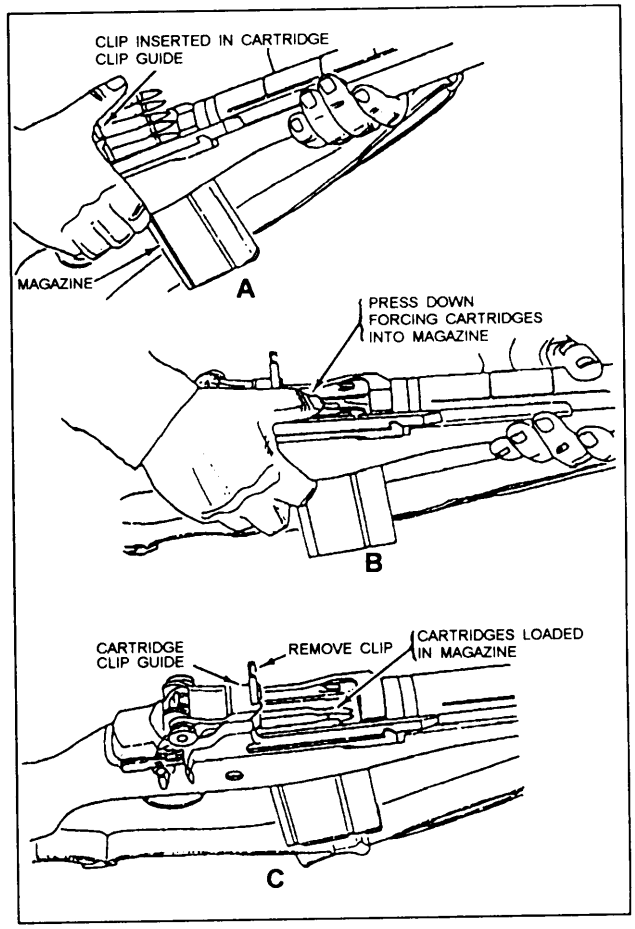

Figure 8-14.—Loading the magazine through the cartridge clip guide.

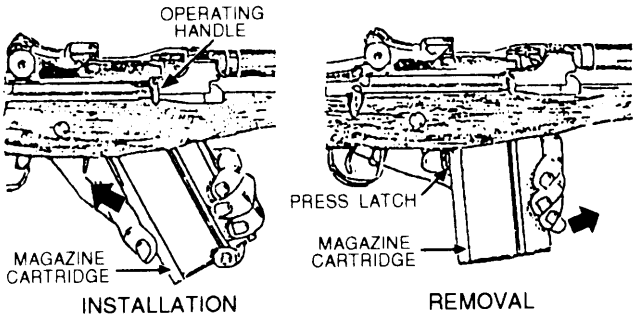

Figure 8-13.—Installation and removal of magazine.

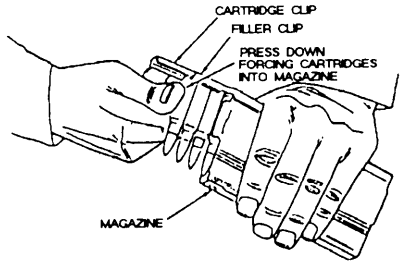

Figure 8-15.—Loading magazine when out of rifle.

receiver), and ease the bolt down against it, then engage the safety. Insert a 5-round clip into the cartridge clip guide, as shown in figure 8-14, and push the cartridges down into the magazine. Four 5-round clips will fully load a magazine. After the last clip is loaded and the clip removed, pull the operating handle to the rear to release the bolt lock, and then release the handle. This will let the bolt go into battery, stripping and feeding the top round into the chamber. The weapon is now ready to fire.

When the magazine is out of the rifle, reload as shown in figure 8-15.

To load a full magazine into a rifle, insert the front end of the loaded magazine well into the front catch

until the front catch snaps into engagement, then pull rearward and upward until the magazine latch locks the magazine into position (fig. 8-13).

The rear sight controls consist of a windage knob and pinion assembly (fig. 8-9). The function of the windage knob is to adjust the sight laterally. To move the sight to the right, turn the knob clockwise; to the left, counterclockwise. The pinion assembly adjusts the sight aperture vertically. Turn the pinion clockwise to raise, counterclockwise to lower.

Firing the M14 Rifle

If the command desires no automatic fire, the selector on your rifle will be removed and a selector shaft lock (fig. 8-9) inserted so that the rifle is capable only of semiautomatic fire.

For a rifle equipped with a selector shaft lock, simply push the safety forward and then fire a round with each squeeze of the trigger.

For semiautomatic fire on a rifle equipped with a selector, position the selector for semiautomatic fire and then fire a round with each squeeze of the trigger.

For automatic fire with a selector (rifle cocked), proceed as follows:

1. Position the selector for automatic fire.

2. Push the safety forward.

3. Squeeze the trigger, and the rifle will fire automatically as along as the trigger is squeezed and there is ammunition in the magazine. Release the trigger to cease firing.

4. After the last round is fired, the magazine follower (a spring-driven plate in the magazine that forces cartridges upward as rounds are expended and cases ejected) actuates the bolt lock, locking the bolt in the rearward position. When an empty magazine is removed and a loaded one inserted, release the bolt lock by retracting the operating rod, thereby drawing the bolt rearward; then close the bolt. As the bolt assembly is closed, the top cartridge in the magazine is pushed forward into the chamber.

Unloading the M14 Rifle

To unload the M14 rifle, proceed as follows:

1. Push the safety to the safe (back) position,

2. Grasp the magazine with your thumb on the magazine latch, and squeeze the latch to release it. Push the magazine forward and downward to disengage it from the front catch, and then remove it from the magazine well, as shown in figure 8-13.

3. Pull the operating rod handle all the way to the rear and lock it using the bolt catch.

4. Inspect the chamber to ensure it is clear.

The rifle is clear ONLY when no round is in the chamber, the magazine is out, the safety is set (to the rear), and the bolt is in the rear position.

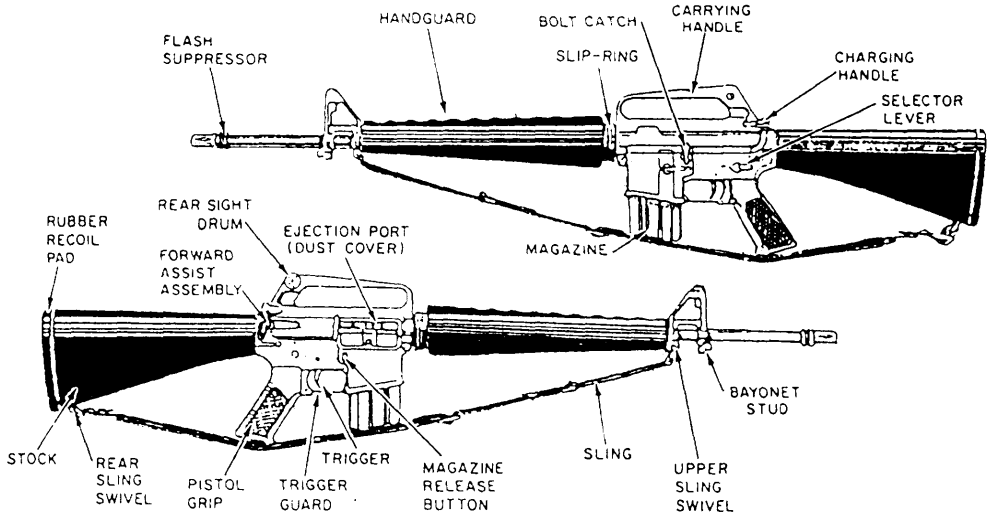

Figure 8-16.—The 5.56-mm M16A1 rifle, left- and right-side views.

M16A1 RIFLE

The M16A1 rifle (fig. 8-16) is a 5.56-mm (about .223-cal.) magazine-fed, gas-operated, air-cooled shoulder weapon. It is designed for either semiautomatic or fully automatic fire through the use of a selector lever. The M16A1, which is the version in use by the Navy, incorporates a forward assist mechanism. The forward assist was added to allow the operator to completely close the bolt should it hang up while feeding. Heavy use in dirty conditions with the close tolerances of the bolt mechanism combined cause many such feeding problems.

A "clothespin" bipod (fig. 8-17) is used in the prone and foxhole positions. The biped is attached to the barrel directly beneath the front sight, between the bayonet lug and the front sling swivel.

Clearing the M16A1 Rifle

The first consideration in handling any weapon is to make it safe by clearing it. To clear the M16A1 rifle, place the butt against the right thigh and proceed as follows:

1. Attempt to point the selector lever toward SAFE, the position shown in figure 8-18. If the weapon is not cocked, the selector lever cannot be pointed toward SAFE. If this is the case, do not cock the weapon at this time; instead, go on to the next step in clearing.

2. Remove the magazine as shown in figure 8-19. Grasp it with the right hand (fingers curled around the front of the magazine, thumb placed on magazine catch button); apply pressure on the magazine catch button with the thumb; and pull the magazine straight out of the weapon.

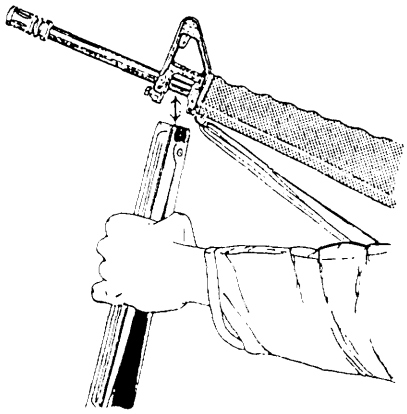

Figure 8-17.—Attaching the clothespin bipod to the M16A1 rifle.

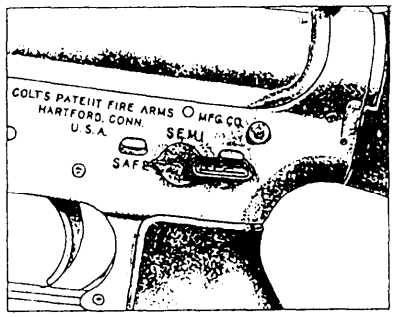

Figure 8-18.-Selector lever pointing to SAFE.

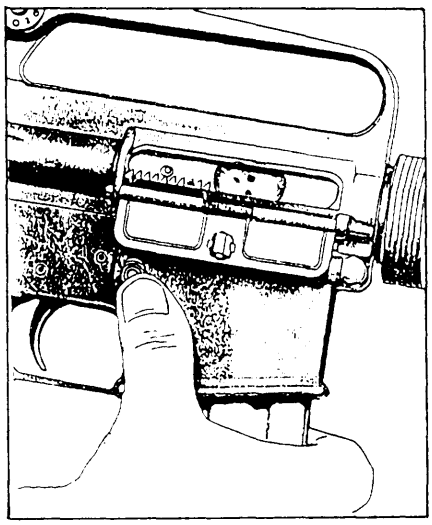

Figure 8-19.—Removing the magazine.

3. Lock the bolt open as shown in figures 8-20 and 8-21. Grasp the charging handle with thumb and forefinger of right hand; depress the charging handle latch with right thumb; and pull to the rear (fig. 8-20).

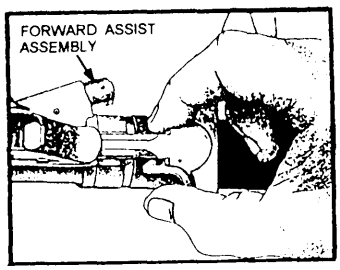

Figure 8-20.—Pulling the charging handle rearward.

When the bolt is at the rear, press the bottom of the bolt catch with the thumb or forefinger of the left hand (fig. 8-21). Allow the bolt to move slowly forward until it engages the bolt catch, and return the charging handle to its forward position.

4. Inspect the receiver and chamber of the weapon by looking through the ejection port to ensure that these spaces contain no ammunition.

5. Check the selector lever to ensure that it points toward SAFE, and then allow the bolt to go forward by depressing the upper portion of the bolt catch.

CAUTION

The selector must be in the SAFE position to prevent damage to the automatic sear.

Loading the Magazine

The magazine has a capacity of 20 rounds and may be loaded with any amount up to that capacity. The magazine follower has a raised portion generally resembling the outline of a cartridge. Cartridges are loaded into the magazine so that the tips of the bullets point in the same direction as the raised portion of the follower (fig. 8-22).

A magazine charger and magazine charger strip (fig. 8-23) are provided to facilitate loading of the magazine. The magazine charger is connected to the magazine and fully seated. The charger strip is inserted into the magazine charger until fully seated. Pushing on the top cartridge will force cartridges into the magazine.

Loading the Rifle

With the weapon cocked, place the selector lever on SAFE. The magazine may be inserted with the bolt either open or closed; however, you should learn to load with the bolt open. This reduces the possibility of a first-round stoppage and saves the time required to chamber the first round by pulling back the charging handle.

Open the bolt and lock it open as previously described. Hold the stock of the rifle under the right

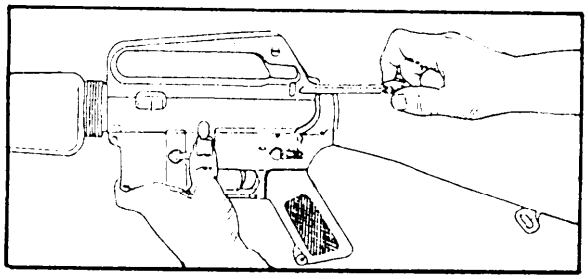

Figure 8-21.-Locking the bolt open.

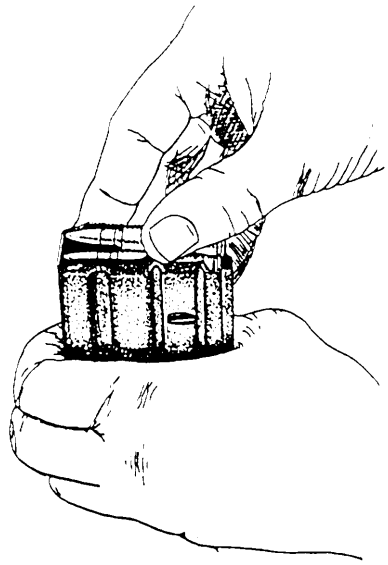

Figure 8-22.—Loading cartridges into the magazine.

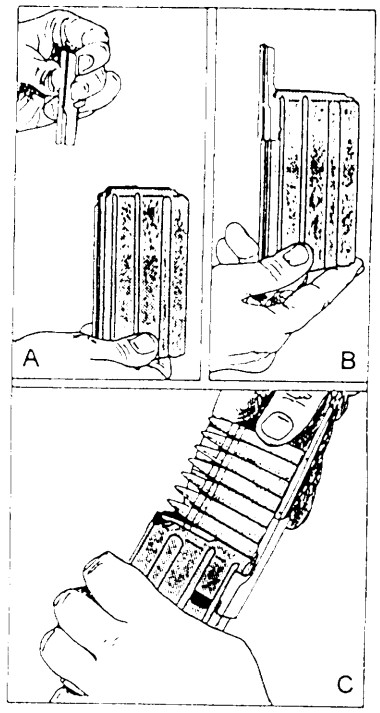

Figure 8-23.—Loading cartridges into magazine with magazine loading strip and charger.

arm with the right hand grasping the pistol grip, and point the muzzle in a safe direction. With the left hand, insert a loaded magazine into the magazine feedway. Push upward until the magazine catch engages and holds the magazine. Rap the base of the magazine sharply with the heel of the hand to ensure positive retention. Then release the bolt by depressing the upper portion of the bolt catch as previously described. The bolt, as it rides forward, will chamber the top round.

If you load the rifle with the bolt closed, you chamber the top round by pulling the charging handle fully to the rear and releasing it.

NOTE

Do not "ride" the charging handle forward with the right hand. If the handle is eased forward from the open position, the bolt may fail to lock. If the bolt fails to go fully forward, strike the forward assist assembly (fig. 8-20) with the heel of the right hand.

Unloading the Rifle

To unload the rifle and make it safe, place the selector lever on SAFE; press the magazine catch button and remove the magazine; pull the charging handle to the rear; inspect the chamber to ensure it is clear; lock the bolt earner to the rear by depressing the lower portion of the bolt catch; and return the charging handle forward.

The rifle is clear (and therefore safe) ONLY when no round is in the chamber, the magazine is out, the bolt carrier is to the rear, and the selector lever is on the SAFE setting.

Gun Maintenance

A clean, properly lubricated and maintained M16A1 rifle will function properly and fire accurately when needed. To keep the rifle in good operating condition, you must properly care for it and perform maintenance according to set procedures. Procedures for the care and cleaning of the rifle can be found on the 3-M System's MRCs or in the Army's TM 9-1005-249-10.

Maintenance of the M16A1 rifle is generally the same as for other small arms previously discussed. The bore and chamber must be kept free of residue and foreign matter. Inspect, while cleaning and lubricating, all sliding or working surfaces for burrs, cracks, or worn areas (repair or replace as necessary) and lubricate with a thin film of lubricant. Remove dirt, rust, grit, gummed oil, and water as these will cause rapid deterioration of the inner mechanism and outer surfaces.

SHOTGUNS

LEARNING OBJECTIVES: List the technical specifications and explain the functions, loading, unloading, and mechanical safety of the Remington M870 shotgun. Describe the operating cycle of the M870 shotgun and determine the required routine maintenance. Recognize the differences between the Remington M870 and Mossberg M500 shotgun.

Shotguns used by the Armed Forces are military versions of civilian models procured from military specifications. The Remington model 870 (M870) and the Mossberg Model 500 (M500) are the Navy's standard issue riot-type shotguns. However, in this chapter, only the Remington M870 (fig. 8-24) will be described in any detail. The Mossberg 500 is very similar to the Remington 870 in construction and operation and is covered by the same MRCs for maintenance.

REMINGTON M870 SHOTGUN

The M870 shotgun, used by the Navy for guard work, is a manually operated, magazine fed (tubular), pump-action shoulder weapon.

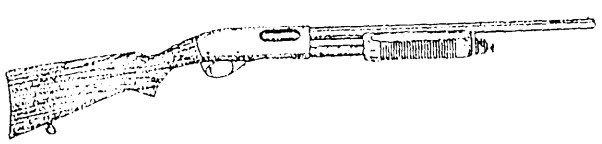

Figure 8-24.-Remington M870 shotgun.

Technical Description

Length of shotgun	39 inches (approximately
Length of barrel	20 inches
Magazine capacity–rounds	4
Shell (gauge)	12
Ammunition	12 gauge 2-3/4 inch 00 buck, military round
Safety	Cross bolt type
Fore-end)	Plain bever tail style

Functioning of the Remington M870

The M870 shotgun can be loaded and unloaded in several different ways. The following paragraphs describe the different options for loading and unloading the M870 and how to operate the mechanical safety. Single-load puts a round directly into the chamber for fast firing, while magazine-load fully loads the tubular magazine but does not chamber a round. Loading the barrel from the magazine chambers a round from the loaded tubular magazine for firing.

SAFETY.— Before loading or unloading, push the safety (fig. 8-25) across the rear of the trigger, left to right, to the safe position (the red band on the safety will not show).

FIRE POSITION.— Push the safety across to the fire position (the red band on the safety will show). The trigger can then be pulled to fire the gun.

SINGLE LOAD.— Push the safety to the safe position. Press in the action bar lock (fig. 8-25) if the action is cocked and pull the fore-end fully to the rear.

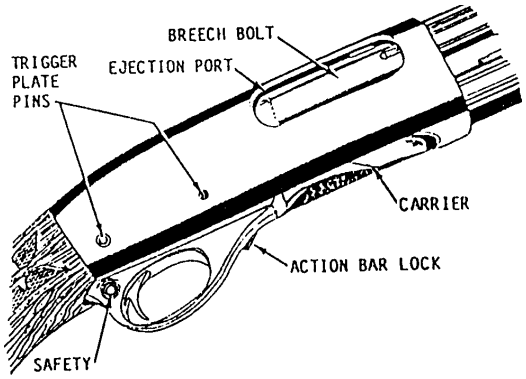

Figure 8-25.—Remington M870 receiver nomenclature.

Place the shell into the open ejection port upon the downthrust carrier. Slide the fore-end toward the muzzle to load the shell into the barrel chamber and lock the action closed,

MAGAZINE LOAD.— Push the safety to the safe position. Slide the fore-end completely forward to close the action. Turn the gun bottom upward and press the shell against the carrier, then forward fully into the magazine. Make sure that the rim of the shell snaps past the shell latch to prevent the shell from sliding back over the carrier. Should this occur, open the action or, if necessary, remove the trigger plate assembly (fig. 8-26), if the gun is cocked, to remove the shell.

LOADING THE BARREL FROM THE MAGAZINE.— Shells can be fed from the loaded magazine by simply pumping the fore-end. Press in the action bar lock if the gun is cocked. Pump the fore-end back and forth to open and close the action.

UNLOADING THE GUN.— Push the safety to the safe position. Press in the action bar lock; pull the fore-end (figure 8-27) slowly rearward until the front end of the shell from the barrel is even with the ejection port in the receiver. Lift the front of the shell outward and remove it from the ejection port. Continue pulling the fore-end back fully until the next shell releases from the magazine. Roll the gun sideways to allow the released shell to drop from the

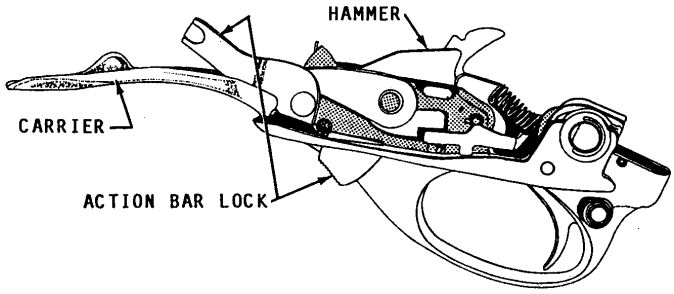

Figure 8-26.—M870 trigger plate assembly.

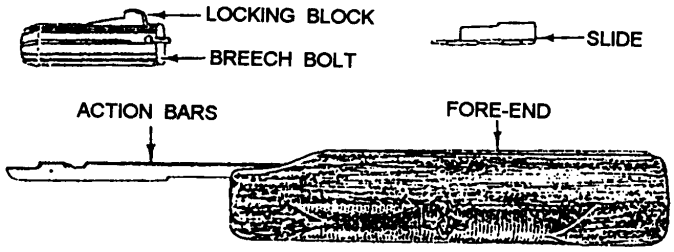

Figure 8-27.—M870 fore-end assembly.

ejection port. Close the action by pushing forward on the fore-end. Continue this same method until the magazine and gun are empty.

CAUTION

Open the action and check the shell chamber in the breech and magazine to make sure no rounds remain in the gun.

UNLOADING THE BARREL ONLY.— Push the safety to the on safe position. Press in the action bar lock and pull the fore-end rearward until the front end of the shell from the barrel is even with the front end of the ejection port. Lift the front end of the shell from the receiver as described previously. A shell with different powder and shot combination may then be placed in the chamber and the action closed without disturbing shells in the magazine.

Remington M870 Operating Cycle

The entire operating cycle of the M870 shotgun is completed by pulling the trigger, sliding the fore-end rearward to open the action, and forward again to close the action. The fore-end is mounted on double-action bars and is fully controlled and operated by the shooter.

Assuming the magazine is loaded and one shell is in the chamber and locked, the gun is ready to fire. The firing cycle follows.

FIRING.— With the cross bolt safety pushed to the fire position (red bands showing), the gun is fired by pulling the trigger. The top part of the trigger rotates forward carrying the right connector, in ready position, forward against the sear. This movement pivots the sear out of engagement with the hammer. The released hammer, with force from the spring-loaded hammer plunger, strikes the firing pin, which is pinned in the breech bolt and spring retracted. The firing pin strikes the primer and ignites the powder charge. During the upward movement of the hammer, it engages the action bar lock just before it strikes the firing pin. Downward movement of the front of the action bar lock is restrained until pressure against it Is briefly released by the shooter's arm as it recoils rearward. When the action bar lock is released, the forward end of the action bar lock is lowered from its position at the rear of the left action bar, and the rear section rises and lifts the left connector which lifts the right connector from contact with the sear. This completes the "lock" or firing cycle. The action bar lock serves a twofold purpose. It serves as a safety feature that disconnects the trigger assembly and sear until a shell is fully seated in the chamber and the breech mechanism again is ready for firing, and it locks the action closed.

After pulling the trigger, pulling the fore-end rearward will open the action and accomplish the unlock, extract, eject, cock, and feed cycles.

UNLOCK.— The initial rearward movement of the fore-end, after the shell has been fired, carries the slide to the rear of the breech bolt. As the breech bolt passes to the rear, the slide cams the locking block from the recoil shoulder of the barrel. This movement unlocks the action and cams the firing pin to the rear where it is locked and prevented from protruding through the bolt face.

EXTRACT.— Continued rearward movement of the fore-end opens the action. The breech bolt moves back and the fired shell is extracted from the chamber. The extractor claw, which overhangs the bolt face, grips the rim of the shell tightly as extraction

progresses. Pivot pressure is exerted on the rear of the extractor by the extractor plunger and spring.

EJECT.— As the extracted shell clears the chamber, its base engages a shoulder on the rear of the ejector spring, which is located on the left side of the receiver. This pivots the shell so its front end is ejected first through the ejection port.

COCKING.— Before ejection occurs, the breech bolt in its rearward travel forces the hammer down against the coiled hammer spring to engage the sear. Sear spring pressure locks the sear in a notched position against the cocked hammer.

FEEDING.— The final movement of fore-end carries the slide, breech bolt assembly, and locking block to the rear of the receiver. Termination of this rearward stroke also permits the left action bar to cam the left shell latch, in turn, releasing the first shell from the magazine. The released shell is forced from the magazine by a spring-loaded follower. The carrier receives the released shell. Meanwhile, the right shell latch, which was caromed into the magazine way by the right action bar during the extraction cycle, intercepts the base of the second shell.

With a shell resting on the depressed carrier, forward movement of the fore-end will close the gun's action and complete the loading and locking cycles.

LOADING.— Forward movement of the fore-end will carry with it the slide, breech bolt, and locking block. The carrier dog is engaged by the slide, pivots the shell carrier upward, and places a shell in the path of the returning breech bolt. As the bolt continues to advance, it depresses the ejector spring and the shell is picked up and loaded into the chamber. The earner dog is released by the passing slide, forced up by the carrier dog follower, and pivots the carrier from the path of the loading shell. The following shell from the magazine, being retained by the right shell latch, is released by the caroming action of the returning right action bar. At this point the shell is intercepted and held by the left shell latch until the next feeding cycle.

LOCKING.— When the shell is fully in the chamber, the action closes and the bolt is against the shell base. The slide continues to travel within the bolt and cams the locking block into the recoil shoulder of the barrel. The locking block secures the breech bolt firmly and is supported by the slide as it completes its forward travel. With the locking block fully seated, the passage through the locking block allows protrusion of the firing pin through the bolt face.

Maintenance

The following discussion on maintenance of the M870 shotgun will cover only action necessary for routine maintenance of the weapon. Maintenance is performed in accordance with the MRCs for this weapon.

Before any disassembly of the shotgun M870 is attempted, be sure no shells remain in the chamber or magazine.

BARREL.— To remove and clean the barrel, push the safety to the safe position. Open the action, unscrew the magazine cap, and pull the barrel from the receiver. Replace the magazine cap on the end of the magazine tube. To clean the barrel, use a cleaning rod with a lightly oiled cloth. If powder fouling remains in the barrel, use a powder solvent to scrub the bore. After using solvent, wipe the barrel clean and re-oil it very lightly. Replace the barrel by removing the magazine cap, insert the barrel in the receiver, and replace the magazine cap.

TRIGGER PLATE ASSEMBLY.— With the safety pushed to the safe position, cock the action. Tap out the front and rear trigger plate pins. Lift the rear of the trigger plate from the receiver, then slide it rearward to remove it from the gun. The trigger assembly will be cleaned as a unit by brushing with a solvent. Wipe the trigger assembly dry and re-oil it very sparingly. When replacing the plate assembly in the gun, make sure the action bar lock enters the receiver easily and operated in position.

FORE-END ASSEMBLY UNIT.— Push the safety to the safe position. Close the action, remove the magazine cap and barrel. Reach into the bottom of the receiver and press the left shell latch inward. Remove the fore-end by sliding it forward off the magazine tube. After the fore-end assembly has been removed from the gun, the breech bolt parts and slide may be lifted from the ends of the action bars.

NOTE

The top right edge of the slide may bind on the bottom front edge of the ejector port in the receiver. To free the slide, push downward on the front end of the bolt.

It is not necessary to disassemble the bolt for routine cleaning, Brush it with solvent to clean, then wipe dry,

Assembly of the weapon is done in reverse of disassembly. There are, however, set procedures to follow to facilitate the assembly.

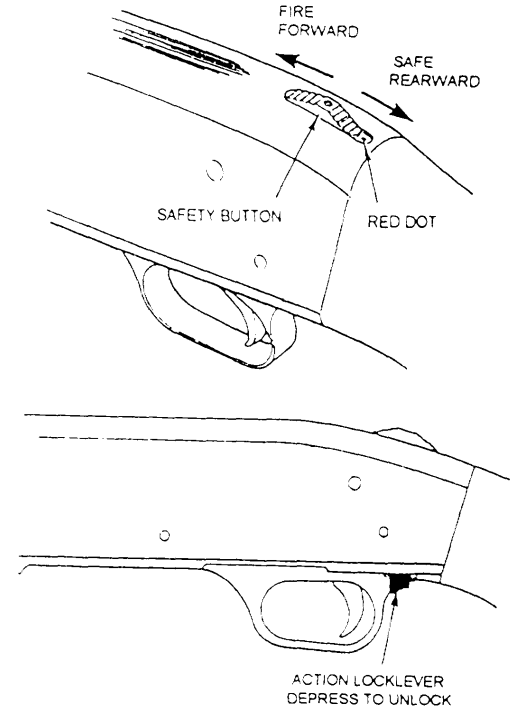

Figure 8-28.—Mossberg M500 shotgun safety and action locklever.

When assembling the fore-end parts, the gun must be cocked. During this assembly, place the slide in the correct position on the ends of the double-action bar. Place the breech bolt assembly, with attached locking block assembly, over the slide on the action bars. Insert the end of the action bars into the matching grooves in the receiver. Move the fore-end slowly until contact is made with the front end of the right shell latch. Press the front right shell latch into the side of the receiver and continue moving the fore-end past this latch until contact is made with the left shell latch. Press the front of the left shell latch in to allow the fore-end assembly to pass and move freely into the receiver. Assemble the barrel to the receiver and tighten firmly with the magazine cap. This completes the assembly of the shotgun.

For further information on the Remington M870 shotgun, refer to U.S. Air Force TM TO-11W3-6-2-1.

MOSSBERG M500 SHOTGUN

While very similar to the M870, the Mossberg M500 has a few significant differences. The following is a brief description of differences that affect operation of the weapon. Figure 8-28 illustrates the location of the safety button and the action locklever on the M500 shotgun. The M500 safety button is located on the top of the receiver, and the action locklever is to the rear of the trigger guard. But the M870 has the safety button in the trigger guard, and the action bar lock to the front of the trigger guard. The disassembly and maintenance of the M500 is basically the same as that of the M870 so much so that they are both currently covered on the same MRC. Further information on the Mossberg M500 shotgun may be found in the manufacturer's owner's manual supplied with the weapon.

7.62-MM M60 MACHINE GUN

LEARNING OBJECTIVES: List the essential features and describe the operation of the M60 machine gun.

The M60 machine gun (fig. 8-29) is an air-cooled, belt-fed, gas-operated automatic weapon. The machine gun was originally developed for use by

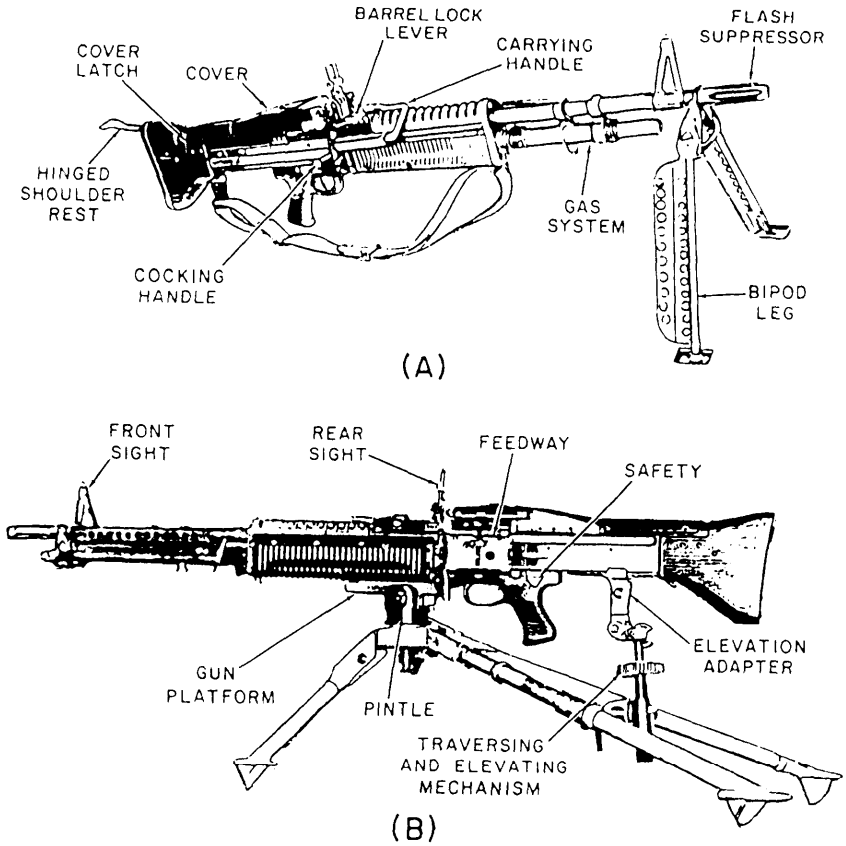

Figure 8-29.—M60 machine gun: (A) Bipod mounted; (B) Tripod mounted.

ground troops; however, it is used on many types and classes of ships, river patrol craft, and combat helicopters.

Essential features of the M60 are as follows:

Length	43.5 in. (110.5 cm)
Weight	23 lb (10.4 kg)
Maximum range	3,725 meters (4,075 yd)
Maximum effective range	1,100 meters (1,200 yd)
Ammunition	7.62-mm ball tracer, armor-piercing, incendiary, and dummy
Rates of fire:	
Sustained	100 rounds per minute
Rapid	200 rounds per minute
Cyclic	550 rounds per minute

The M60 has a front sight permanently affixed to the barrel. The rear sight leaf is mounted on a spring-type dovetail base (fig. 8-30). It can be folded forward to the horizontal when the gun is to be moved. The range plate on the sight leaf is marked for each 100 meters, from 300 meters to the maximum effective range of 1100 meters. Range changes may be made by using either the slide release or the elevating knob. The slide release is used for making major changes in elevation. The elevating knob is used for fine adjustments, such as during zeroing. Four clicks on the elevating knob equal a 1-mil change of elevation. The sight is adjustable for windage 5 roils right and left of zero. The windage knob is located on the left side of the sight. One click on the windage knob equals a 1-mil change of deflection.

NOTE

One mil equals 1 inch at 1000 inches, 1 yard at 1000 yards, 1 meter at 1000 meters, etc.

A safety lever is located on the left side of the trigger housing. It has an *S* (SAFE) and an *F* (FIRE) position. On the SAFE position the bolt cannot be pulled to the rear or released to go forward. The cocking lever, on the right side of the gun, is used to pull the bolt to the rear. It must be returned manually to its forward position each time the bolt is manually pulled to the rear.

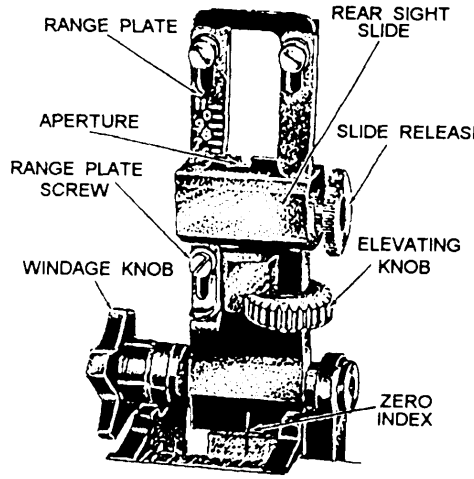

Figure 8-30.-M60 rear sight.

OPERATION

The machine gun is designed to function automatically as long as ammunition is fed into the gun and the trigger is held to the rear. Each time a round is fired, the parts of the machine gun function in a certain sequence. Many of the actions occur simultaneously and are only separated for teaching purposes. The sequence of operation is known as the cycle of operation.

The cycle starts by putting a round in the feed tray groove and then pulling the trigger, releasing the sear from the sear notch (fig. 8-31). It stops when the trigger is released and the sear again engages the sear notch in the operating rod. When the trigger is held to the rear, the rear of the sear is lowered and disengaged from the sear notch. This allows the operating rod and bolt to be driven forward by the expansion of the operating rod spring. Now that the gun is functioning, the steps of the cycle can be traced.

As the bolt begins its forward movement, the feed cam is forced to the right, causing the feed cam lever to pivot in the opposite direction and forcing the feed pawl over the next round in the belt, ready to place it in the feed tray groove when the rearward action occurs again. As the bolt moves to the rear (fig. 8-32) after the firing, the cam roller on the top of the bolt forces the feed cam to the left. The feed cam lever is forced to pivot, moving the feed pawl to the right, placing a round in the feed tray groove.

As the bolt travels forward, the upper locking lug engages the rim of the cartridge. The pressure of the front and rear cartridge guides hold the round so that

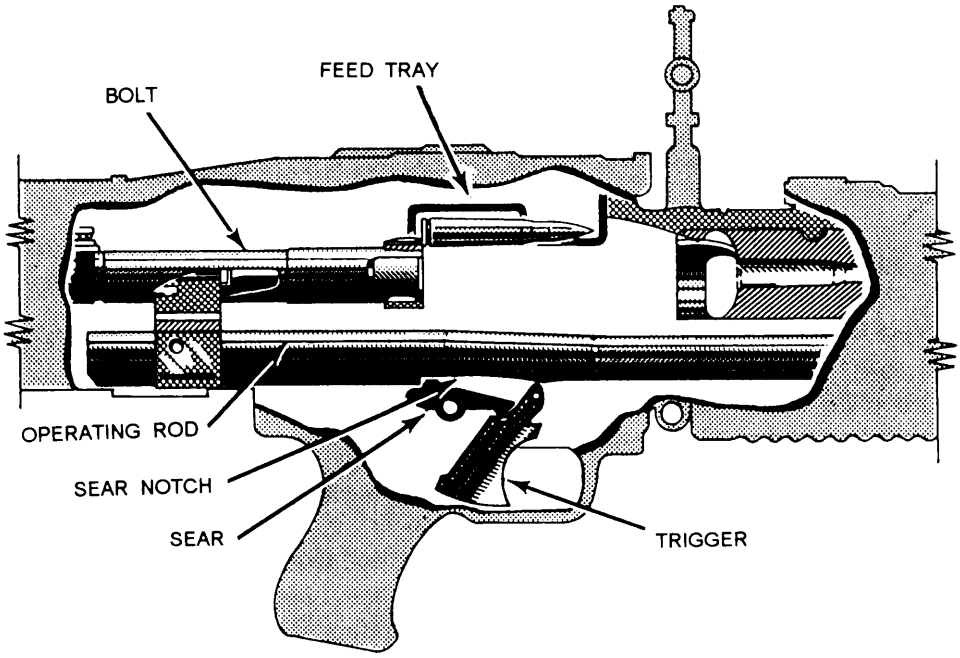

Figure 8-31.-Sear disengaging from sear notch.

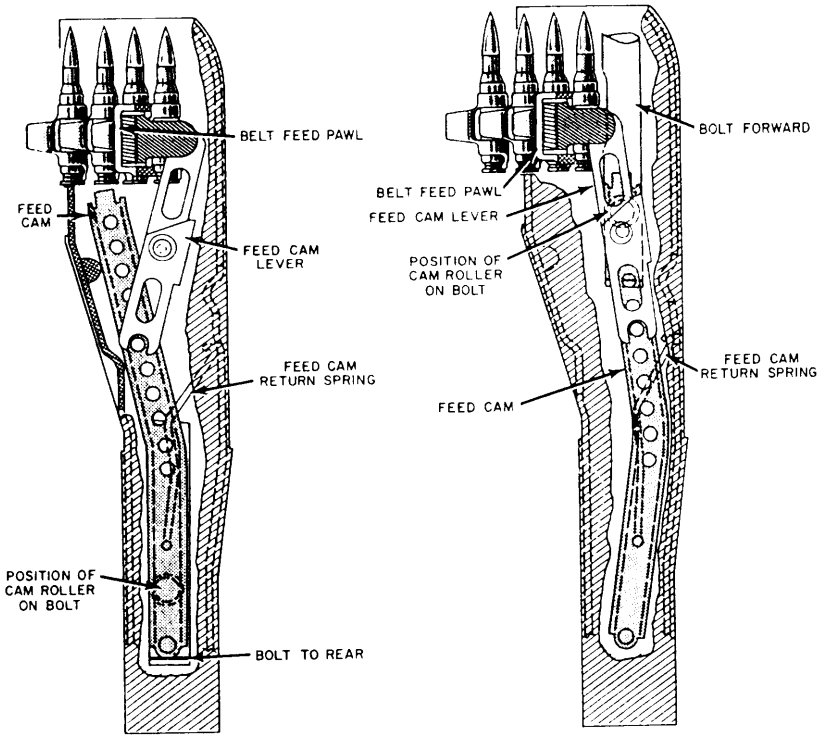

Figure 8-32.-Feeding.

positive contact is made with the upper locking lug of the bolt. The front cartridge guide prevents the link's forward motion as the round is stripped from the belt, The upper locking lug carries the round forward, and the cambering ramp causes the nose of the cartridge to be caromed downward into the chamber as shown in figure 8-33. When the round is fully seated in the chamber, the extractor snaps over the rim of the cartridge, and the ejector on the face of the bolt is depressed.

As the round is chambered, the bolt enters the barrel socket. The upper and lower locking lugs contact the bolt caroming surfaces inside the barrel socket and start the rotation of the bolt clockwise. The action of the operating rod yoke against the bolt caroming slot, as the operating rod continues forward, causes the bolt to complete its one-quarter turn clock- wise rotation (fig. 8-34). Locking is then completed.

After the bolt reaches its fully forward and locked position, the operating rod continues to go forward, independently of the bolt, for a short distance. The yoke, engaged between the firing pin spools, carries the firing pin forward. The striker of the firing pin protrudes through the aperture in the face of the bolt, strikes the primer of the cartridge and detonates it. This action is depicted in figure 8-35.

After the cartridge is ignited and the projectile passes the gas port, part of the expanding gases enter the gas cylinder through the gas port. The rapidly expanding gases enter the hollow gas piston as shown in figure 8-36, and force the piston to the rear. The operating rod, being in contact with the piston, is also pushed to the rear. As the operating rod continues to the rear, the operating rod yoke acts against the bolt camming slot to cause the bolt to begin its counter- clockwise rotation. The upper and lower locking lugs of the bolt, contacting the bolt caroming surfaces in- side the barrel socket, cause the bolt to complete its one-quarter turn rotation (counterclockwise) and un- lock the bolt from the barrel socket. Unlocking begins as the yoke of the operating rod contacts the curve of the bolt caroming slot, and ends as the bolt clears the end of the barrel socket.

While unlocking is going on, extraction is beginning. The rotation of the bolt (in unlocking) loosens the cartridge case in the chamber. As the operating rod and bolt continue to the rear, the extractor (gripping the rim of the cartridge) pulls the cartridge case from the chamber. As the case is withdrawn from the chamber, the ejector spring expands. The ejector presses on the base of the cartridge case, forcing the front of the spent case against the right side of the receiver, as shown in figure 8-37. As the bolt continues to the rear, the action of the ejector pushing against the base of the cartridge case and the extractor gripping the right side of the case cause

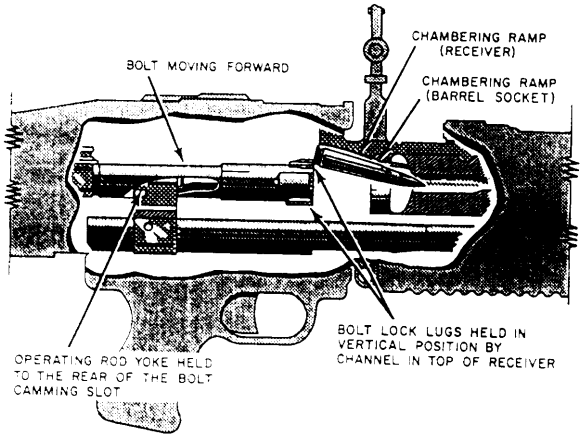

Figure 8-33.-Chambering.

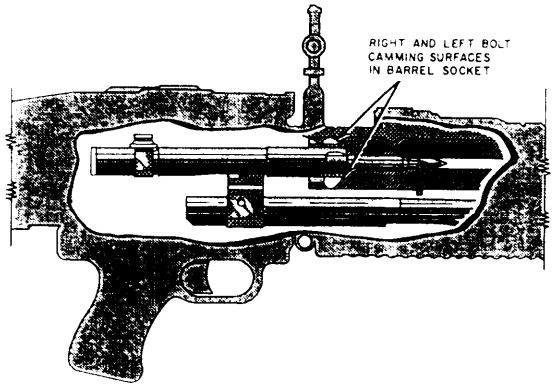

Figure 8-34.-Weapon locked, ready to fire.

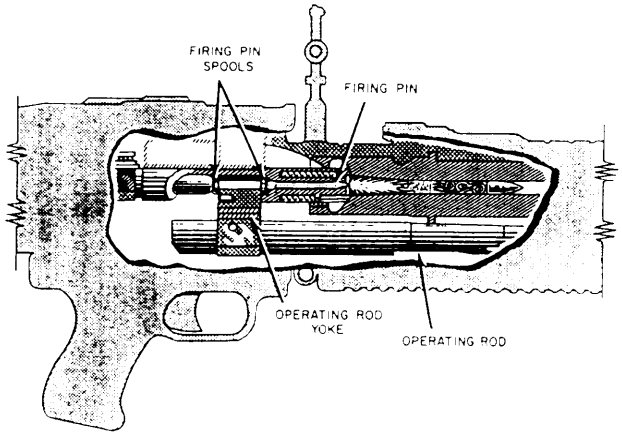

Figure 8-35.—Firing.

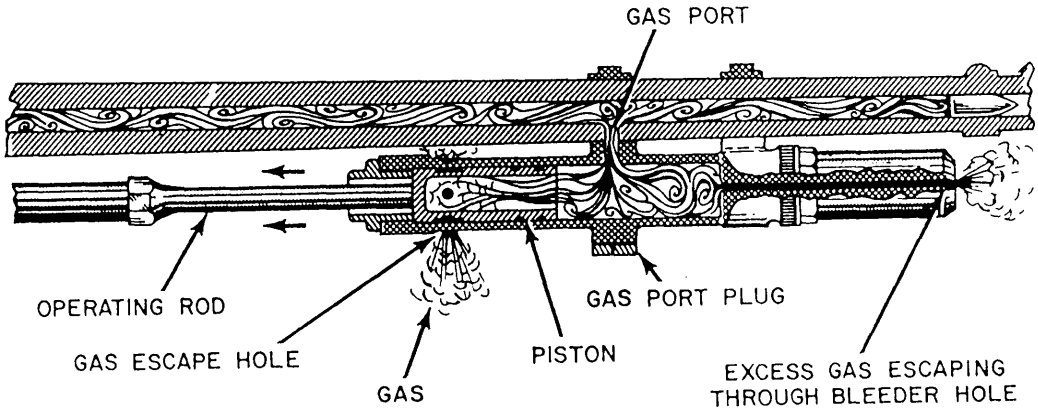

Figure 8-36.-Unlocking action of gases.

the cartridge case to spin from the gun as the case reaches the ejection port. The empty link is forced out of the link ejection port as the rearward movement of the bolt causes the next round to be positioned in the feed plate groove.

As the expanding gases force the gas piston to the rear, the operating rod is initially moved independently of the bolt. The yoke of the operating rod acts against the rear firing pin spool, withdrawing the firing pin from the primer of the spent cartridge case. The action of the operating rod yoke continuing to the rear against the rear firing pin spool fully compresses the firing pin spring. As long as the trigger is held to the rear, the weapon will continue to complete the first seven steps of functioning automatically. When the trigger is released and the sear again engages the sear notch, the cycle of functioning is stopped and the weapon is cocked.

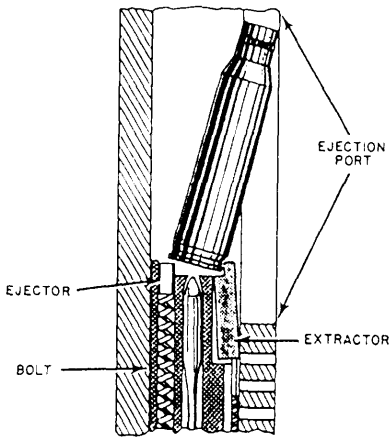

Figure 8-37.—Extraction and ejection.

For further information on the M60 machine gun refer to U.S. Army TM 9-1005-224-24 and TM 9-1005-24-10.

GRENADE LAUNCHERS

LEARNING OBJECTIVES: List the two types of grenade launchers used by the Navy. Describe the controls of the M79 grenade launcher and explain the operating procedure.

The Navy currently uses two types of grenade launchers, the M79 and the Mk 19, Mod 3 machine gun. Both fire a 40mm grenade ammunition. However, the ammunition is NOT interchangeable. The linked rounds for the Mk 19, Mod 3 have a longer casing than those intended for use in the M79. For our purpose we will only discuss the operation of the M79.

40-MM M79 GRENADE LAUNCHER

The M79 grenade launcher (fig. 8-38) is a break-open, single-shot weapon. It is breech loaded and chambered for a 40-mm metallic cartridge case

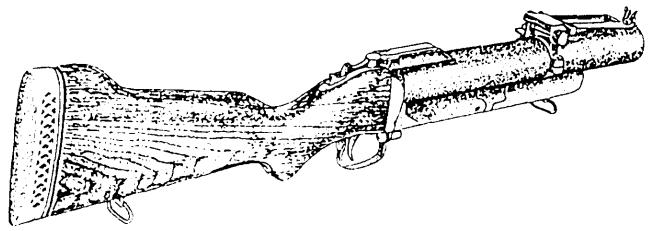

Figure 8-38.—M79 grenade launcher.

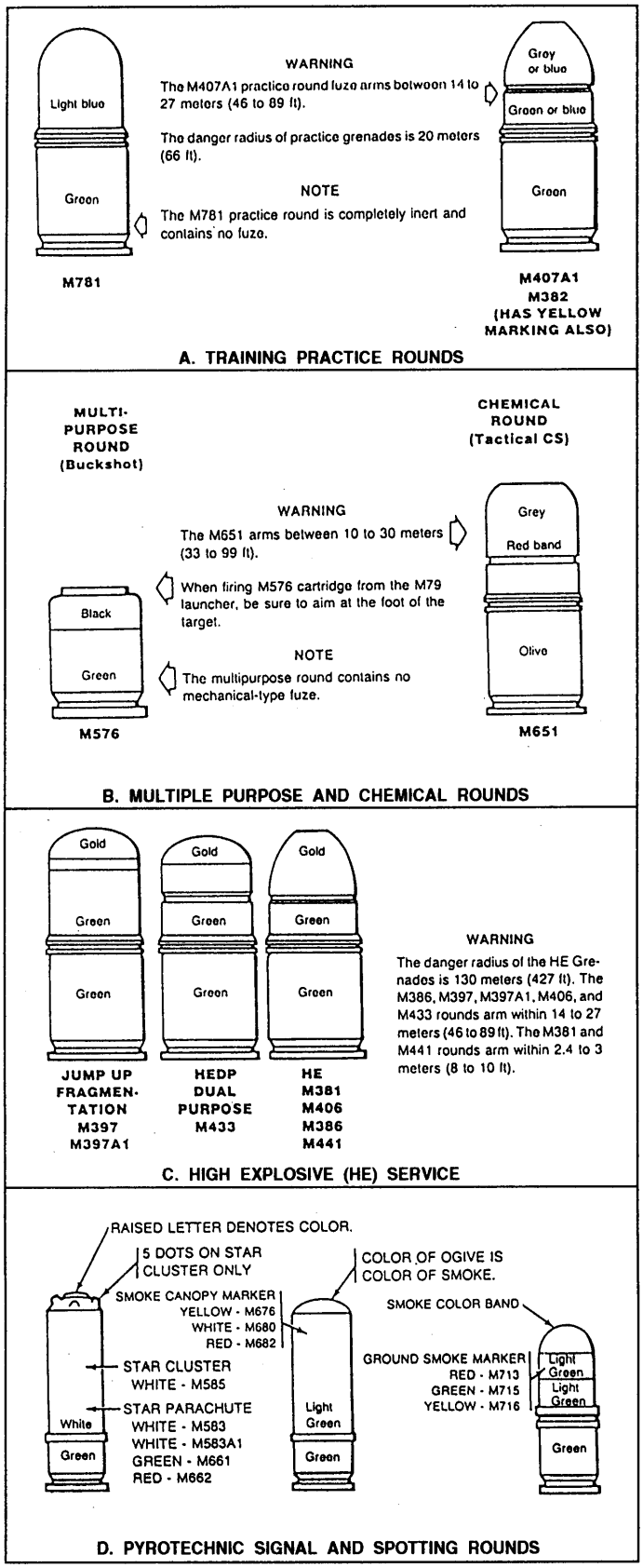

Figure 8-39.-Cartridges used in the M79 grenade launcher: (A) Training practice rounds; (B) Multiple purpose and chemical rounds; (C) High explosive (HE) service; (D) Pyrotechnic and spotting rounds.

with internal primer. Cartridges used with the M79 grenade launcher are shown in figure 8-39.

CONTROLS OF THE M79 GRENADE LAUNCHER

The safety (fig. 8-40) is in the safe position when pulled all the way back and in the firing position when pushed all the way forward.

The barrel locking latch (fig. 8-40), when pushed all the way to the right, permits the breech end of the barrel to be swung up into the open position. The grenade launcher cocks as it opens.

The trigger guard (fig. 8-40) is shown in lowered position. It can be released for setting to one side or the other by pushing back the cylindrical housing at the front. This makes it possible for a person wearing heavy gloves or mittens to fire the grenade launcher. The sighting equipment for the launcher is shown in figure 8-41.

OPERATING THE M79 GRENADE LAUNCHER

The following procedures should be followed when loading and firing the M79 grenade launcher.

Preparation for Firing

Check the bore to be sure that it is free of foreign matter or obstructions. Check all ammunition to be sure proper type and grade are being used. Check for

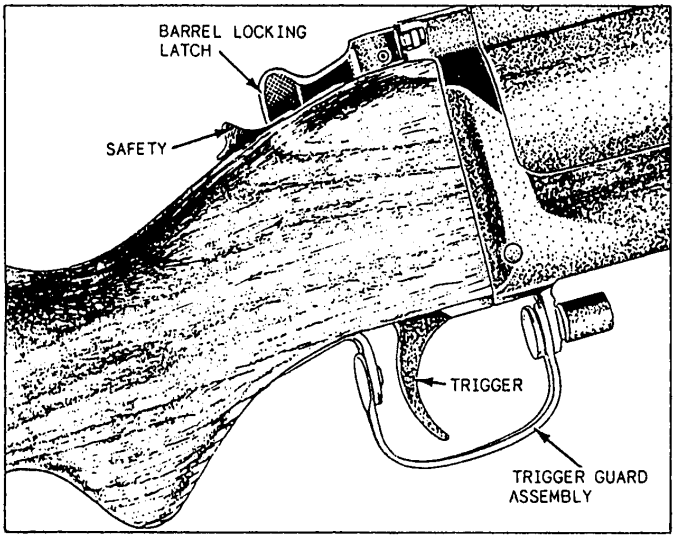

Figure 8-40.-M79 Grenade launcher controls.

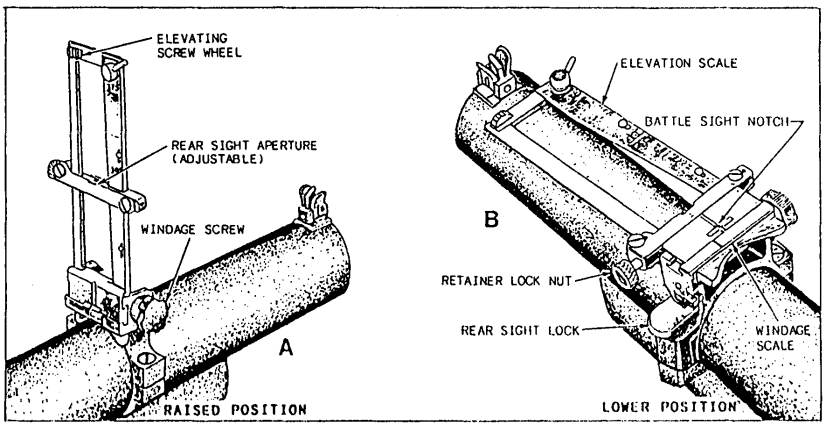

Figure 8-41.—Rear sight assembly.

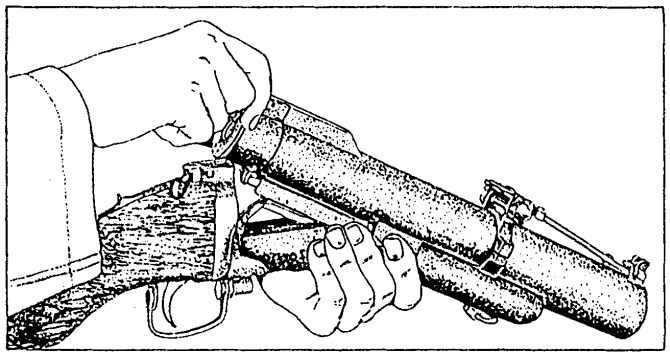

Figure 8-42.—Loading the M79 grenade launcher.

launcher to be sure that it is properly cleaned. Inspect for malfunction and other defects.

Loading

Point the muzzle of the launcher at the ground and clear the area of all personnel.

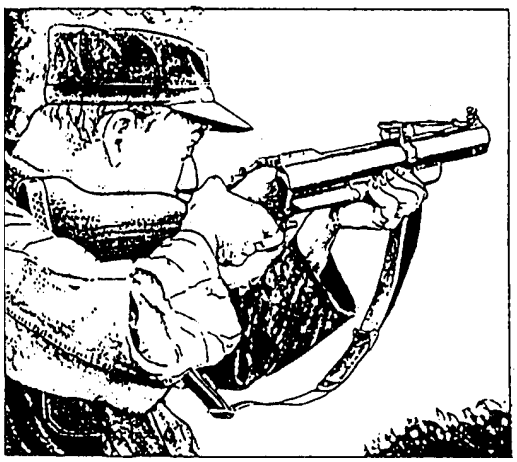

Figure 8-43.—Firing the M79 from the standing position.

Move the barrel locking latch all the way to the right and break open the breech. If the safety is not already on SAFE, this procedure will cause it to move to SAFE provided that the barrel locking latch is moved to its full limit of travel.

Insert the projectile portion of the ammunition into the chamber opening (fig. 8-42) and push the complete round forward into the chamber until the extractor contacts the rim of the cartridge case.

Close the breech.

Firing

When the launcher is fired, you must be in either a standing or prone position. In the standing position, the butt is placed against the shoulder. In the prone position, the butt is placed against the ground. (See figures 8-43 and 8-44.)

Figure 8-44.—Firing the M79 from the prone position.

A detailed discussion of sightsetting is beyond the scope of this course. However, to engage targets at ranges from 50 to 80 meters (165 to 265 feet), the rear sight frame assembly is placed in the lowered (called the "battle sight") position (fig. 8-43). Longer ranges are fired with the rear sight frame in the upright position (fig. 8-41) and the sight aperture bar set at the approximate target range of the scale. TM 9-1010-205-10 provides detailed instruction on use of the launcher's sights.

When firing grenades at targets within battle sight ranges (50 to 80 meters or 165 to 265 feet), the operator must be in a protected position. Targets that are within 80 meters (265 feet) of friendly troops must not be fired upon.

SPECIAL PRECAUTIONS FOR SMALL ARMS

LEARNING OBJECTIVES: Discuss the special precautions that must be observed when handling small arms. Identify and describe 10 safety precautions that must be applied when handling small arms.

Semiautomatic pistols in the hands of inexperienced or careless persons are largely responsible for the saying, "It's always the unloaded gun that kills." It is a fact that many accidental deaths and injuries are due to the mistaken belief that removing the magazine of a weapon is all that is necessary to unload it. Nothing could be further from the truth. To completely unload a weapon and render it safe, you must not only remove the magazine but also make certain the chamber is empty. The only way this can be done is to pull back the slide or bolt and inspect the chamber either visually or, it if is dark, by feel. All weapons must be considered loaded when the slide or bolt is forward and/or the magazine is in the weapon.

Let us review briefly some of the safety precautions that apply to the handling of all small arms:

1. Never point a weapon at anyone or anything you are not ready to destroy.

2. Unless the weapon is to be used immediately, never carry it with a round in the chamber.

3. Unless you are about to fire it, the safety of every small-arms weapon must always be in the SAFE position. Always keep your finger away from the trigger. When the safety is moved from the SAFE to FIRE position, many small arms will fire if the trigger is pressed as the safety is released.

4. Consider a gun loaded until you have opened the chamber and verified that it is empty. It is not enough to wail, afterward, "I didn't know it was loaded." The empty weapon is the dangerous one.

5. Before firing any weapon, be sure there are no obstructions in the bore.

6. Before firing any weapon, be sure the ammunition you are using is the right ammunition. For example, the M14 ammunition cannot be used in the M 16 rifle. Nor should you try to use illumination signals with shotguns, even though they look much like shotgun shells.

7. Before firing, be sure there is no grease or oil on the ammunition or in the bore or chamber. Although lead bullets may be lightly waxed or greased, there must never be any lubricant on the cartridge case.

8. Keep ammunition dry and cool. Keep it out of the direct rays of the sun. Keep ammunition clean, but do NOT polish it or use abrasives on it. Do not attempt to use dented cartridges, cartridges with loose bullets, or cartridges eaten away by corrosion.

9. Misfires and hangfires can occur with small-arms ammunition as well as with other types. On some weapons like the automatic pistol, you can recock and attempt to fire again without opening the breech. If after a couple of tries this proves unsuccessful, or if the weapon cannot be recocked without opening the bolt, wait at least 10 seconds, then open the bolt and eject the defective round. Defective small-arms ammunition should be disposed of in accordance with current regulations.

A misfire with blank cartridges may leave unburned powder deposited in the bore; always check the bore after any misfire and clean it if necessary.

WARNING

Never try to dislodge a bullet from the barrel by firing another bullet.

10. If you experience a light recoil or report, clear the weapon and check the bore for obstruction, Obstruction may indicate a partial burning of the propellant, which may not have been sufficient to force the bullet clear of the muzzle.

WARNING

DO NOT attempt to operate any small arms or pyrotechnic device until you are thoroughly trained and certified on that device. The information contained in this training manual should not be used to replace source publications or prescribed training procedures.

SMALL ARMS MAINTENANCE

LEARNING OBJECTIVES: Define *preventive maintenance* and explain the importance of preventive maintenance for small arms. List three sources that outline preventive maintenance for small arms.

Preventive maintenance is the systematic care, inspection, and servicing of material to maintain it in a serviceable condition, prevent breakdowns, and assure operational readiness. To maintain your small arms in a state of readiness, you must service them (including lubrication) each time they are used and periodically when in stowage,

The cleaning, preservation, and care given to small arms are determining factors in their operation and shooting accuracy. You have undoubtedly heard that an ounce of prevention is worth a pound of cure. This can aptly be applied to the maintenance of all ordnance weapons and equipment. To properly maintain these weapons, you must use a system of preventive maintenance. Normally, the preventive maintenance procedures are set forth in the 3-M System's maintenance requirement cards (MRCs). TMs and FMs also provide a schedule of maintenance instructions for each weapon.

Inspections of each weapon are an important part of preventive maintenance. Inspections to see if items are in good condition, correctly assembled, secure, not worn, and adequately lubricated apply to most items in preventive maintenance procedures.

STOWAGE AND ISSUE OF SMALL ARMS

LEARNING OBJECTIVES: Explain the importance of proper stowage and issue of small arms. Identify the instruction that contains information on security of small arms.

As an MA, you may be responsible for the security, stowage, and issue of all small arms at a security department ashore. The increasing number of reported instances of ammunition and weapon pilferage by dissident groups and individuals indicates the necessity for stricter control of storage, security, custodial responsibility, and inventory reconciliation procedures for easily pilfered items, which includes small arms.

Small arms should always be stowed in an authorized and secure stowage to preclude pilferage. A strict accountability must be maintained at all times. OPNAVINST 5530.13, *Department of the Navy Physical Security Instruction for Conventional Arms, Ammunition, and Explosives (AA&E)* contains detailed instructions for the security of small arms and other AA&E materials. This includes access control, key custody, and storage requirements. Since this instruction is subject to frequent changes we will not go into any detail on its contents. However, you are strongly encouraged to become familiar with the specifics of this document and to make its contents the object of frequent training and review in your work center.

Since all small arms are considered equipage, a signature of subcustody is required before they are issued from their normal place of stowage. Any type of signed custody record may be used as long as it bears the receiving individual's signature. Inside your armory you should have a list of personnel who are qualified to be issued weapons. Anyone who is not on that list should not be able to draw a weapon from the armory. A second consideration for issuing small arms is to determine whether or not the requesting person is authorized to draw a weapon at this time. Any out-of-the-ordinary requests for weapons should be prearranged and authorized. When in doubt, call your chief, division officer, or the command duty officer. Again, the important security measures are to keep the weapon locked up and, when it is issued, to determine qualification and authority, and to get a signature.

STORAGE FACILITIES

Access to each storage facility will be limited, to maintain accountability and control of firearms, and the facility will be secured when not under the direct supervision of an authorized custodian. The keys to each lock used to secure firearms also will be controlled. Personnel on duty in arms storage rooms must be armed at all times.

The commander will develop written procedures for control and operation of storage facilities to ensure

that all firearms are accounted for. Unit personnel maintain a list containing the type, model number, caliber, name of manufacturer, and serial number of all firearms for which the unit is responsible. (This list will be useful in making required inventories and rapid identification of lost or stolen weapons.) Current policy and guidance relative to small arms and weapons management may be found in *Small Arms and Weapons Management Policy and Guidance,* NAVSEAINST 8370.2.

MARKSMANSHIP

LEARNING OBJECTIVES: State the primary use of a side arm and describe the three elements of marksmanship. Explain the importance of maintaining small arms qualifications for Master-at-Arms personnel.

The primary use of the side arm is to return quick, accurate fire at close range. Accurate shooting is the result of knowing and correctly applying the elements of marksmanship. The important elements of marksmanship are (1) position, grip and aim, (2) sight alignment, and (3) trigger control.

TRAINING

Marksmanship training is divided into two phases; preparatory marksmanship training and range firing.

These two phases may be divided into separate instructional steps. All marksmanship training must be progressive.

A thorough course in preparatory marksmanship training must precede any range firing. This training must be given to all Masters-at-Arms expected to fire the side arm on the range, including those who have previously qualified with the weapon. The MA should develop correct shooting habits before range firing. The purpose of preparatory marksmanship training is to establish correct shooting habits.

Preparatory marksmanship training should be taught as follows:

1. Positions.
2. Proper grip of the weapon.
3. Sight alignment.
4. Trigger control.

AIMING

Proper aim is achieved through correct position and grip. Aiming is the relationship of the firer's position and weapon to the target. When assuming a position, the firer's body and weapon must be aligned to the target. Proper grip of the weapon is essential to ensure that the aim of the weapon is in line with the firer's alignment to the target.

A proper grip is one of the more important fundamentals of quick fire. The pistol is gripped as tightly as possible until the hand begins to shake. The grip is then relaxed until the tremor stops. At that point, the firer is applying the necessary pressure for a solid grip. With practice, the same amount of pressure will be applied each time the firer assumes the grip.

Sight alignment is the relationship of the front sight to the rear sight. Correct sight alignment is having the front and rear sights level, with the front sight being centered in the rear sight. Perfect sight alignment is virtually impossible, since the front sight is continually moving. The object is to maintain the front sight level and centered with the rear sight as closely as possible, which holds the weapon within the area of aim. When you are sighting, the eye cannot focus on three objects (rear sight, front sight, target) at different ranges. Therefore, the focus should be on the front sight through the rear sight. The front and rear sights will be seen clearly and sharply while the target will appear to be a bit hazy. The bullet will strike the target within the area of aim if the sight has been aligned correctly. Since it is impossible to hold the weapon perfectly still, the shooter must understand that he or she must apply trigger control and maintain correct sight alignment while the weapon is moving in and around the target. This movement of the weapon is referred to as "arch of movement." The shooter must make an effort to keep movement of the weapon to a minimum.

Correct sight alignment is essential for accuracy, particularly with the side arm because of the short sight radius. For example, if a 1/10-inch error is made in aligning the front sight in the rear sight, the bullet will miss the point of aim by about 15 inches at 25 meters of range. The 1/10-inch error in sight alignment magnifies itself as the range increases; at 25 meters it is magnified 150 times.

If the firer does not call the shot correctly in range firing, he or she is not concentrating on sight alignment; consequently, the firer does not know what

the sight picture is while firing. To *call the shot* is to state where the bullet should strike the target according to the position of the front sight at the instant the weapon fires; for example, "high," "a little low," "to the left," "to the right," or "center target."

It is important to emphasize that holding the breath properly is necessary to good marksmanship. Emphasis on this point is required because many persons hold their breath improperly or not at all. The breath should be held while the firer is aiming and applying trigger pressure. While the procedure is simple, it requires explanation, demonstration, and supervised practice. To hold the breath properly, the firer inhales an ordinary breath, lets a little out, and holds the rest by closing the throat.

TRIGGER CONTROL

Poor shooting is generally caused because the aim is disturbed before the bullet leaves the barrel of the weapon. This is usually the result of the firer's jerking the trigger or flinching. The trigger does not have to be jerked violently to spoil the aim; even a slight off-center pressure of the finger on the trigger is enough to cause the weapon to move and disturb the firer's sight alignment. Flinching is a subconscious reflex caused by the firer's anticipating the recoil of the weapon. Jerking is an effort by the firer to fire the weapon at the precise time the sights align with the target. Flinching and jerking will cause the bullet to hit the lower left section of the target for a right-hand shooter. Heeling is caused by a firer's tightening the large muscle in the heel of the hand to keep from jerking the trigger. A firer who has had difficulty with jerking the trigger will attempt to correct the fault by tightening the bottom of the hand, which results in a heeled shot. Heeling will cause the bullet to hit on the top-right section of the target. The firer can correct these shooting errors by understanding and applying correct trigger control. Correctly applied trigger control imparts no unnecessary movement to the weapon. Improper trigger control causes more misses on the target than any other single step of preparatory marksmanship training.

To apply correct trigger control, the trigger finger may contact the trigger anywhere from the tip of the finger to the first joint, depending on the length of the trigger finger. If pressure from the trigger finger is applied to the right side of the trigger or weapon, the strike of the bullet will be to the left. That is due to the normal hinge action of the fingers. When the fingers of the right hand are closed, as in gripping, they hinge or pivot to the left. (With the left hand, this action is to the right.) The firer must exercise care in the control of the trigger, so as not to apply pressure left or right but straight to the rear.

QUALIFICATIONS

All Master-at-Arms personnel must maintain small arms qualifications. The guidance for qualification and proper range procedures can be found in the *Law Enforcement Manual,* OPNAVINST 5580.1, *Physical Security Manual,* OPNAVINST 5530.14 and *Small Arms Training and Qualification,* OPNAVINST 3591.1. MAs failing to maintain these qualifications may face removal from the MA rating.

SUMMARY

In this chapter, we defined the term *small arms,* explained small arms nomenclature, and looked at the small arms cycle of operation. Next, we covered firing systems, basic types of operation for small arms, and range and rates of fire. The Navy's two standard handguns, the .45-cal pistol and the .38-cal. revolver, were then considered. The M14 and M16 rifles, shotguns, and the 7.62-mm M60 machine gun were examined, followed by grenade launchers and special safety precautions. Then we looked at pyrotechnics, pyrotechnic safety, and small arms maintenance. Finally, we covered stowage and issue of small arms and the elements of marksmanship.