CHAPTER 10

MAGNETIC DISK STORAGE

INTRODUCTION

Probably the most used storage medium today is the magnetic disk. Disks and disk drives come in a variety of sizes and types. Diskettes (floppies or floppy disks) are used in personal computers in offices and make it easy to exchange data between offices and commands. Disk file units, also referred to as mass memory units, have removable hard disk packs and are used with the large mainframe computer systems such as the Combat Direction System (CDS) and the Shipboard Nontactical ADP System (SNAP). The fixed disk drives are used extensively in personal computers and minicomputers such as the Tactical Command System (TCS).

After completing this chapter, you should be able to:

- **State the functions of magnetic disk storage devices**
- **Define *random access* as used in magnetic disk memory systems**
- **Describe the different types of magnetic disks**
- **Define magnetic disk tracks, sectors, and cylinders**
- **Describe the construction of floppy disks**
- **Describe the operations of floppy disk drives**
- **Define disk density and coercivity**
- **Describe the correct procedure for installing and configuring a floppy disk drive in a microcomputer**
- **Describe how MS-DOS organizes data on floppy disks**
- **Describe the precautions to be followed in handling and storing floppy disks**
- **Describe the construction of a disk pack**
- **Describe the major functional areas of a disk file unit controller**
- **Explain the functions of the major components of the disk drive unit or a disk memory set**
- **Explain how a disk memory set formats a disk, writes data to a disk, and reads data from a disk**

- **Describe the physical characteristics of a fixed disk system**
- **Describe the data encoding methods used to write data on magnetic disks**
- **Describe disk interleaving effects on hard drive operations**
- **Explain the methods for recovering data from a fixed disk drive**
- **Explain the methods for preventing, detecting, and removing computer viruses from fixed disk systems**
- **Describe the precautions to be followed in handling and storing floppy disks, disk packs, and fixed disks**

The popularity of disk systems has grown because of their speeds and large capacities to store data. Disks are generally thought of as random access memory devices, although this is not entirely true. To find data on a disk, first the read/write heads must seek a track, then wait while the disk spins to the desired sector. When the sector is reached, the heads can read or write data.

In our study of disk storage devices, we explore what tracks and sectors areas well as the three major types of disk devices: floppy disk drives, disk file units, and fixed disk drives. We also examine how data is stored on a disk.

When discussing floppy and fixed disk systems in personal computers, we are referring to IBM and compatible computers using Intel 80286 or greater microprocessor system. References to DOS refer to the Microsoft Disk Operating System (MS-DOS).

TOPIC 1—FUNDAMENTALS OF MAGNETIC DISKS AND DISKS DRIVES

Magnetic disks are generally termed as secondary storage for computer systems. They are used to temporarily hold data that is not immediately required for computer operations and to store programs that are not currently being executed. Through the years, magnetic disk data capacities have increased at tremendous rates. The first fixed disk drives had a capacity of just 5 megabytes. Today, fixed disk capacities are approaching several gigabytes. The same holds true for floppy disk drives. The original 8-inch floppy was a single-sided disk with a total capacity of 180 kilobytes. Today we have 3.5-inch floppy disks with a capacity of over 1.4 megabytes. Also, there are disk file units with removable disk packs that have capacities of several gigabytes. Disk file units are used with mainframe computer systems with large databases to speed up access times and to provide flexibility to system configuration.

TYPES OF DISKS

As mentioned previously, there are currently two types of disks: the **hard disk** and the **floppy disk** or diskette.

Hard Disks

Hard disks are divided into two groups, the **disk packs** used with disk file systems and the fixed disks.

DISK PACKS. —Diskpacks contain large (usually 14”) platters. They are packaged in vertical stacks of up to 16 disks. Each disk surface is coated with a magnetic medium and can be used for data storage, although the top and bottom surfaces of the pack are usually used as protective surfaces. Disk packs are easily removed from the drive system. They have very large capacities and can store from 500 megabytes to

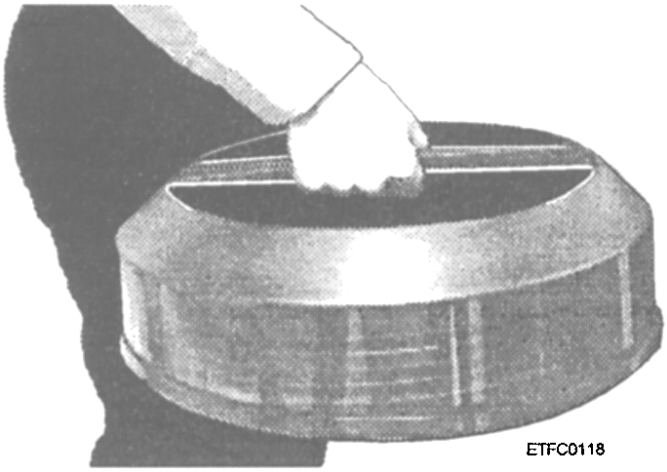

Figure 10-1.—A magnetic disk pack.

several gigabytes. An example of a disk pack is shown in figure 10-1.

Disk cartridges are another form of disk pack with the heads and head actuator assemblies contained within a sealed cartridge. Since the disk pack is never removed from the cartridge, disk cartridges suffer less contamination problems from dust and dirt than standard disk packs.

FIXED DISKS. —Fixed disks are small sealed units that contain one or more disk platters. Fixed disks are known by several terms, such as Winchester drive, hard drive, or fixed disk. For clarity, we refer to them as fixed disks throughout this chapter. Fixed disks are used in minicomputers and personal computers. They can also be adapted for use in mainframe computers instead of having separate disk file units.

Floppy Disks

Floppy disks come in several sizes and densities. They are called floppy disks because the magnetic coating is placed on a thin flexible polyester film base.

THE 8-INCH FLOPPY DISK. —The 8-inch floppy disk was the first disk widely used for commercial purposes. It is available as both single- or double-sided and single- or double density. The 8-inch disk is quickly becoming obsolete.

THE 5.25-INCH FLOPPY DISK. —The 5.25-inch floppy disks are used with both personal computers and minicomputers. The standard double-sided, double-density disk has a capacity of 360 kilobytes (K). Quad-density disks hold 720K, while the newest high-density disks can hold 1.2 megabytes (M).

THE 3.5-INCH FLOPPY DISK. —The current disk of choice is the 3.5-inch floppy disk. These disks are also used with personal computers and minicomputers. These smaller disks have data capacities of 720K for double-density disks and 1.44M for high-density disks.

ORGANIZING DATA ON DISKS

Before data can be stored on a magnetic disk, the disk must first be divided into numbered areas so the data can be easily retrieved. Dividing the disk so the data can be easily written and retrieved is known as **formatting** the disk. The format program divides each data surface into tracks and sectors.

Tracks —Concentric rings, called tracks, are written on the disk during the formatting process. Floppy disks have 40 or 80 tracks per side. Fixed disks and disk packs can have from 300 to over 1,000 tracks per side. Figure 10-2 shows an example of how tracks are written on a disk surface. Each track is assigned a number. The outermost track on a disk is assigned number 00. The innermost track is assigned the highest consecutive number.

Sectors —Each track is divided into sectors. Sectors are numbered divisions of the tracks designed to make data storage more manageable. Without sectors, each track would hold more than 4,500 bytes of information and small files would use an entire track.

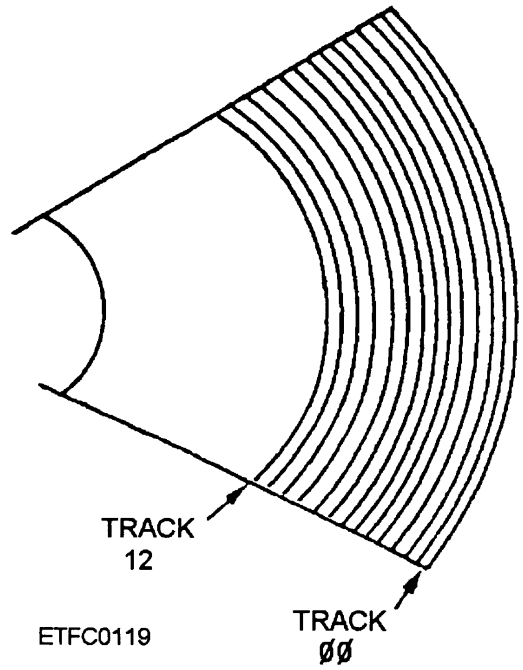

Figure 10-2.—Tracks on a segment of a magnetic disk.

Figure 10-3 shows how a disk surface is divided into sectors and tracks. A 360K floppy disk is divided into 9 sectors per track and 40 tracks per side. Each sector is capable of holding 512 bytes. Simple math tells us the 512 bytes per sector times 9 sectors per track times 40 tracks per side times 2 sides equals 368, 640 bytes.

Cylinder Addressing

Disk drives generally use the cylinder addressing method to store and retrieve data. In a disk drive, the read/write heads are positioned concurrently by parallel access arms to the same track number. In other words, if one head seeks track 20, then all heads move to track 20 of their respective recording surface.

This means that all identically numbered tracks on the disk pack recording surfaces form a vertical cylinder. The cylinder number corresponds to the track number. All track 00s form cylinder 00. All track 200s form cylinder 200 and so on. Figure 10-4 shows an example of a disk drive seeking cylinder 20 of a disk pack. If a disk pack has 10 recording surfaces with 800 tracks per surface, then it would have 800 cylinders. Data is stored or retrieved by using the cylinder address. The cylinder address consists of the cylinder number, sector number, and head or recording surface number.

Formatting

As we have seen, formatting a disk writes the tracks and sectors on the disk. In addition, the format program used with personal computers also examines the disk for bad areas and creates the **root directory,** the **file allocation table** (FAT), and the **disk boot sector.** The boot sector contains information to tell the computer what type of disk is being used, what format the data is in, and other information that the DOS needs to read the disk.

Fixed disks used in personal computers need an additional **high-level format** that defines the type of drive and the operating system being used.

Once a disk is formatted, it is ready to have data written on it. How the data is stored in the sectors is primarily driven by the disk operating system (DOS). The following section shows how DOS organizes data on floppy and fixed disks by using directories.

Directories

DOS stores data in **directories.** A directory is a file system that enables DOS to manage files. There are two types of directories: the root directory and the subdirectories.

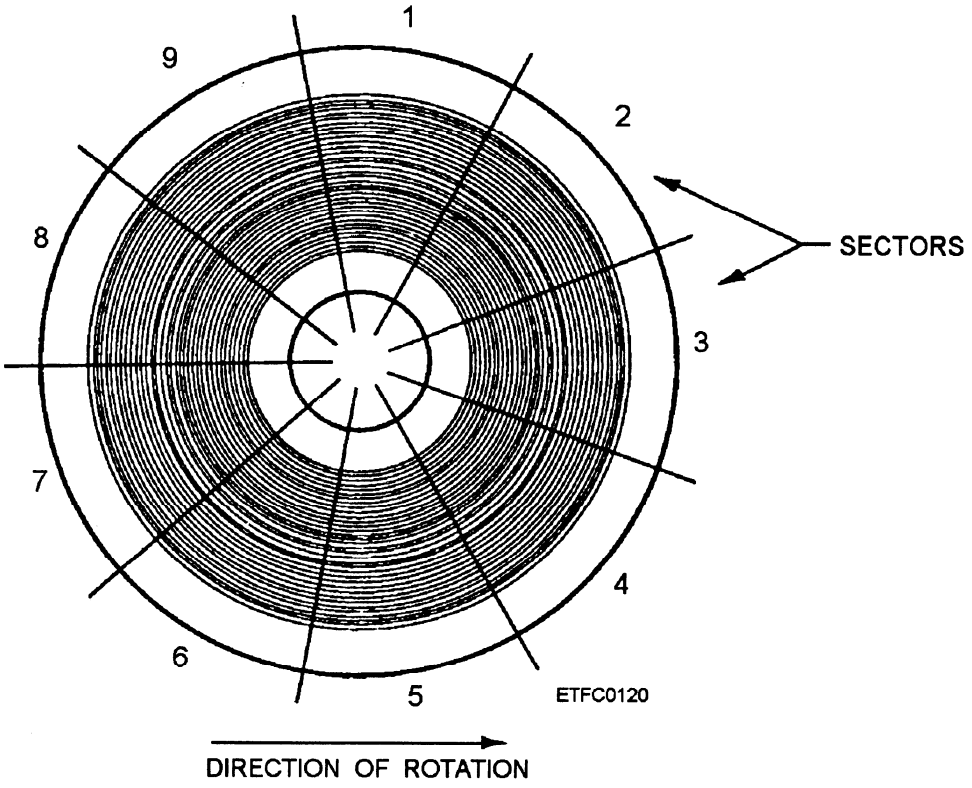

Figure 10-3.—Sectors and tracks on a magnetic disk.

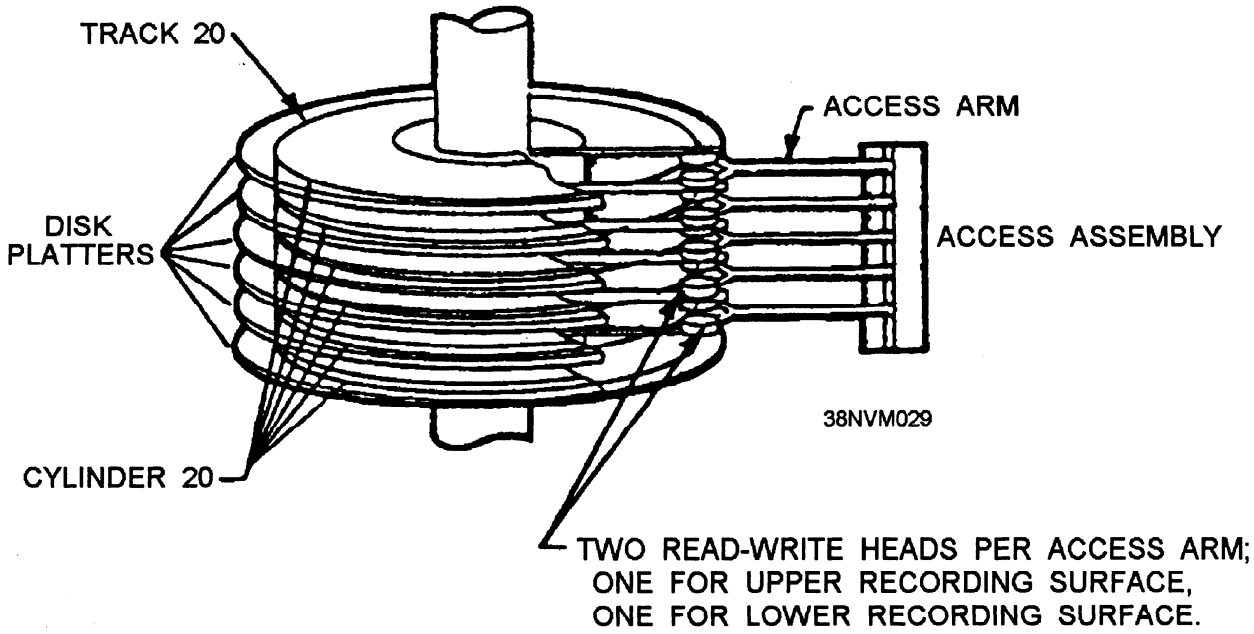

Figure 10-4.—Disk pack access arm seeking cylinder 20.

Root Directory —Formatting a disk creates the root directory. This directory is limited in size according to the type of disk you have and what version of DOS you are using. With a DOS version of 3.x or greater, all floppy disks and 10M fixed disks have 128 entries in the root directory. Fixed disks with 20M+ capacity have a root directory with space for 512 entries.

Subdirectories —Subdirectories are directories that are treated as data files. There is no limit on how many entries they can have. To help you keep data organized, you can also make subdirectories for subdirectories.

Table 10-1 illustrates a typical directory tree for a fixed disk.

In table 10-1, the directories \DOS, /DATABASE, and \WORDPROC are subdirectories of the root directory C:\. The directory WILES is a subdirectory of \WORDPROC.

Table 10-1.—A Typical Directory Tree

DIRECTORY NAME	DIRECTORY CONTENTS
C:\	Root directory
\DOS	DOS files
\DATABASE	Database program
\WORDPROC	Word processing program
\FILES	Subdirectory of WORDPROC, contains data files created with word processing program

DOS stores files in these directories. When you create a file, you must give the file a name to store it. The **name** can be up to eight characters in length, followed by a period and a three character **extension.** The file extension is used to help identify the type of file. Program file extensions are .EXE (execute) or .COM (command). A .BAT extension designates a batch file.

Looking at a directory entry, you will find that each entry is 32 bytes long. Table 10-2 illustrates the breakdown of a DOS directory entry.

File attributes designate whether the file has been marked by the creator as a read-only file, a hidden file, a system file, or a subdirectory, or if the file has been archived.

Table 10-2.—DOS Directory Entry

ENTRY	BYTES USED
File name	8 bytes
File name extension	3 bytes
File attributes	1 byte
Reserved for future use	10 bytes
Time file created	2 bytes
Date file created	2 bytes
Starting cluster	2 bytes
Size of file (in bytes)	4 bytes

The **date** and **time** fields are updated every time the file is changed.

The **starting cluster** field indicates where the beginning of the file is stored on the disk. DOS uses clusters to define disk areas. Depending on the type and capacity of a disk, a cluster can be from 1 to 128 sectors. A 5.25-inch, 360K floppy disk has 2 sectors per cluster. A 32M freed disk has 4 sectors per cluster. DOS uses the starting cluster field to reference the file allocation table (FAT) to get information as to where the entire file is stored.

File Allocation Table

The file allocation table (FAT) is created during the formatting process. There is a FAT entry for each cluster on the disk. A FAT entry will be

— a zero (0), to indicate the cluster is available for storage,

— an end of file code,

— a bad cluster code (written during formatting), or

— a number that points to the next cluster in the file.

Suppose we have a file named EVAL.ABC on a 5.25-inch, 360K floppy disk. The file is 4,608 bytes long and could be stored in 4.5 clusters. DOS cannot use partial clusters so this file would occupy 5 full clusters. The directory entry for the starting cluster indicates cluster 25 as the first cluster of this file. Table 10-3 illustrates what the FAT entries for this file might look like.

As illustrated in table 10-3, the disk had clusters 25, 26, and 27 available to store EVAL.ABC, then had more data so the rest of the file was stored in clusters 70 and 71. Note also the FAT is a one-way pointer. That is, by examining the contents of the entry for cluster 70, we see that the file continues in cluster 71, but we don't know the previous cluster was cluster 27.

TOPIC 2—FLOPPY DISKS AND DISK DRIVES

Floppy disks are available in a variety of densities for each size of disk. The disks are labeled as to the maximum density each is designed to handle. Table 10-4 shows the sizes and densities of some floppy disks. The differences between the disk types listed in tables 2-4 and using them in various drives is covered in detail later in this chapter.

Table 10-3.—Contents of a File Allocation Table

FAT CLUSTER #	CONTENTS OF FAT	MEANING
24	Bad	DOS marked this cluster as bad during formatting
25	26	Next cluster in file is 26
26	27	Next cluster in file is 27
27	70	Next cluster in file is 70
...	...	
70	71	Next cluster in file is 71
71	End of file	This is the last cluster of this file

Table 10-4.—Floppy Disk Density Formats

DISK TYPE	TRACKS	SECTORS	CAPACITY	FERROUS MATERIAL
5.25-Inch Disks				
360K DSDD	40	9	360K	Iron oxide
Quad-density	80	9	720K	Iron oxide
High-density	80	15	1.2M	Cobalt
3.5-Inch Disks				
Low-density	80	9	720K	Cobalt
High-density	80	15	1.44M	Cobalt

Floppy disk drives are the simplest of all magnetic disk devices, but contribute to a large number of problems in personal computer operations. Most of the floppy disk and drive problems you will encounter as a technician are caused by improper system operation. By thoroughly examining the operation of a floppy drive, you can eliminate many of these errors. In the following sections, we explore the construction of 5.25-inch and 3.5-inch disks and the operation of a typical disk drive unit.

THE 5.25-INCH FLOPPY DISK CONSTRUCTION

When you examine a 5.25-inch floppy disk, you notice several holes and notches as well as the disk itself. Figure 10-5 shows a 5.25-inch floppy disk.

The 5.25-Inch Disk

The disk is visible through the media across hole on either side of the disk. The disk is made of thin flexible polyester film that is coated with a magnetic material. This material is iron-oxide on low-density disks (360K) and cobalt on high-density disks.

Disk Jacket

The disk is enclosed in a plastic jacket to protect the disk surface from contamination caused by dust, dirt, and smoke. The inside of the disk jacket is lined with soft felt to clean the disk as it spins. On the bottom of the disk jacket are two notches called stress relief notches. They help prevent the disk from warping and relieve stress on the disk. Some drives also use these notches to keep the disk in the proper position in the drive.

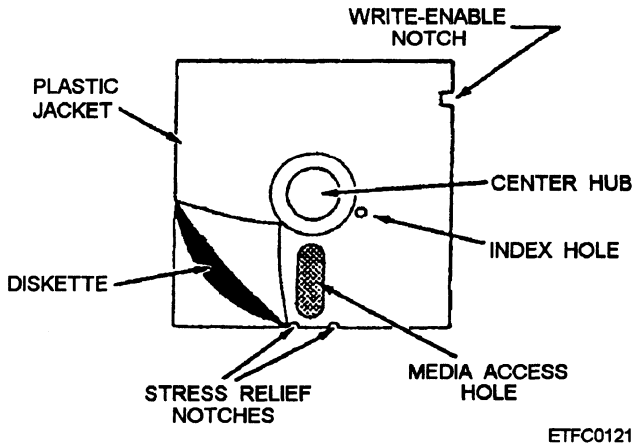

Figure 10-5.—The 5.25-inch floppy disk.

Media Access Hole

Below the large hole in the middle of the disk is a large oval hole called the media access hole. There is a media access hole on each side of the disk. When you insert the disk in a drive, the heads are positioned over these holes to read or write on the disk.

Index Hole

Just to the right and above the media access hole is a small round hole known as the index hole. If you were to look at the disk, you would notice a small hole near the big hole in the middle. This index hole indicates the start of sector 1 on each track.

SOFT-SECTORED DISKS. —Soft-sectored disks have only one index hole. The sectors are physically written on the disk during the formatting operation. The index hole indicates the starting point for sector 1 on each track.

HARD-SECTORED DISKS. —Some disks have eight or nine index holes. These are known as hard-sectored disks and each hole represents the start of a sector. Never try to use a hard-sectored disk in a drive designed for soft-sectored disks as it will drive the machine crazy trying to find sectors 2 through 9.

Write Enable Notch

On the right edge of the disk jacket, about 1 inch from the top is a small notch in the jacket. This is the write enable notch. In order to write on a disk, this notch must be present. If you want to protect a disk from accidental loss of data, cover this notch with a strip of tape. Strips of tape for write protection are usually provided in the box with the disks.

Central Hub Access Hole

In the center of the disk is a big hole known as the central hub access hole. When you insert the disk in a drive and close the door, a cone-shaped clamp centers the disk and clamps it to the spindle motor. Due to the pressure, many clamps exert on disks, most disks have a reinforcement ring around the edge of the disk to prevent damaging it.

THE 3.5-INCH FLOPPY DISK CONSTRUCTION

Figure 10-6 shows a 3.5-inch disk. The 3.5-inch and 5.25-inch disks are constructed of the same basic materials. The disk is a thin flexible polyester film base that is coated with a magnetic compound. This compound is iron-oxide for standard and double-density disks and a cobalt ferric compound for high-density disks.

Disk Case

The 3.5-inch floppy disk's rigid plastic case stabilizes the disk as it spins. This allows for greater densities of data to be written on the disk.

Media Access Hole and Shutter

Examining the case of a 3.5-inch disk, you'll notice several differences from the 5.25-inch disk. The first difference is the metal shutter covering the media access hole. This shutter is spring loaded and moves out of the way to expose the disk when the disk is loaded into a drive. When the disk is not loaded in a drive, this shutter covers the hole and eliminates the need for a disk jacket to store the disk.

Write Protect/Write Enable Slide

Write protection for the disk is accomplished by means of a slide switch in the lower left comer of the disk. Figure 10-6 illustrates the location of the write protect/write enable slide switch. When the slide switch is positioned so you can see a hole through the case, the disk cannot be written on.

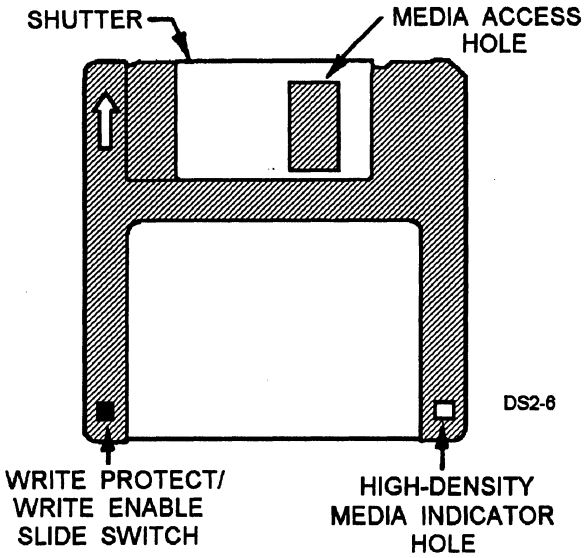

Figure 10-6.—The 3.5-inch floppy disk.

Media Indicator Hole

On the lower right corner of some 3.5-inch disks is another hole that designates the disk as a high-density disk. When a high-density disk is loaded into a high-density drive, a sensor checks for the presence of this hole. If it is present, the disk can be formatted in the 1.44M mode. If this hole is not present, the disk can only be formatted as a 720K disk.

FLOPPY DISK DRIVE OPERATION

Several basic components are common to all floppy disk drives. To properly test, install, or service a disk drive, you must be able to identify these components and understand their functions in the drive. Figure 10-7 shows a typical 5.25-inch disk drive with the major components labeled as follows:

- Spindle assembly/drive motor
- Drive electronics circuit board
- Connectors
- Head actuator assembly
- Read/write head arm assembly

Spindle Assembly/Drive Motor

The spindle holds the disk in place while it spins. The drive motor spins the spindle at the proper speed. Most floppy disk drive motors spin at 300 rpm except the 1.2M drive, which spins at 360 rpm. Almost all half-height drives use a direct drive motor to turn the spindle, and the speed cannot be adjusted.

Some older Ml-height drives use a belt-driven motor. These belt-driven drives usually have a strobo-disk mounted on the underside of the drive set to both 50 Hz and 60 Hz. To adjust the speed, you remove the drive and issue a command to get the motor running. Look at the strobo-disk under a fluorescent light and adjust the drive speed until the outer strobo-disk spokes appear to be standing still. The inner disk is setup for 50 Hz operation, the frequency of European main power.

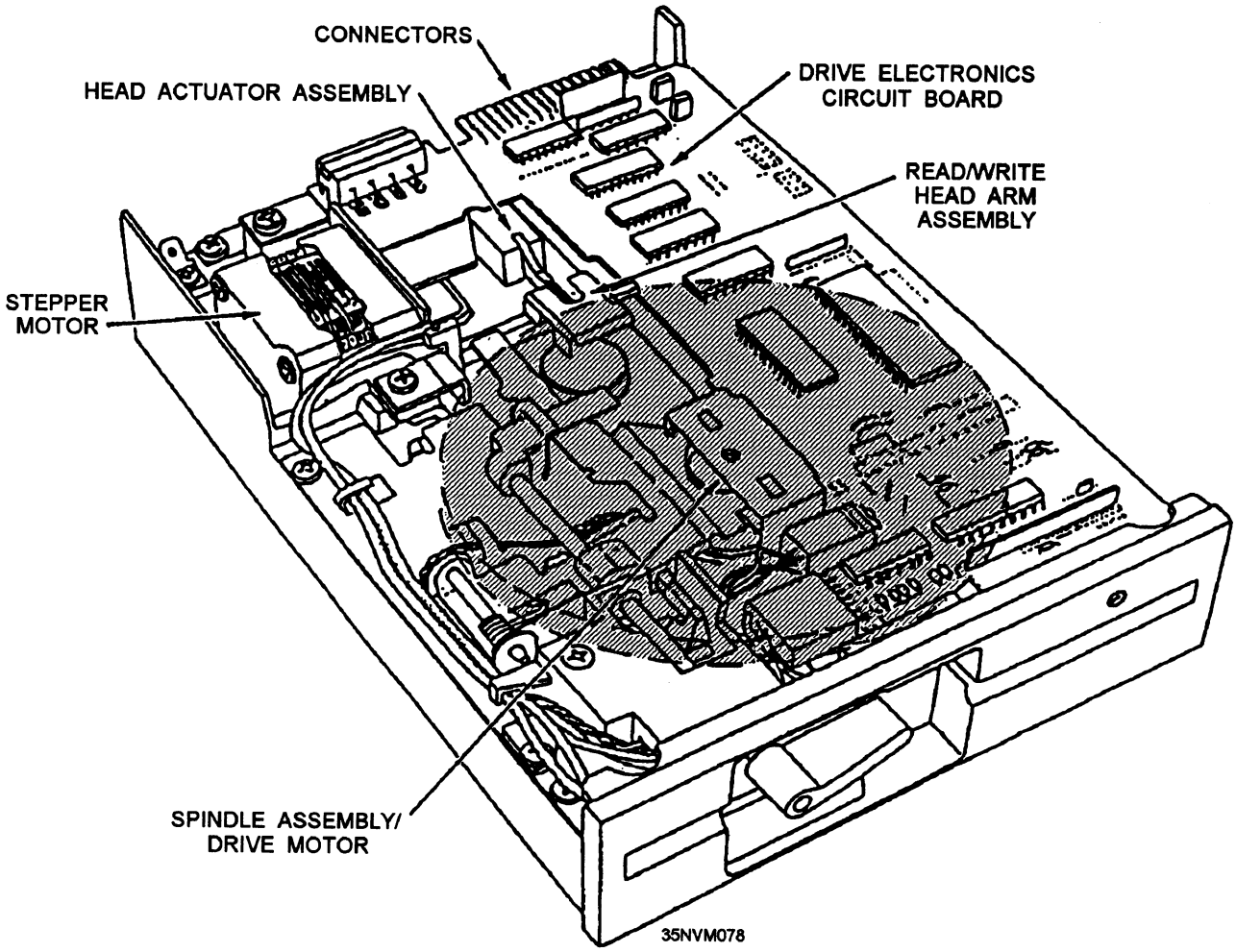

Figure 10-7.—A typical floppy disk drive.

Drive Electronics Circuit Board

Mounted to the disk drive is the drive electronics circuit board. This board contains the circuitry that (1) controls the electromechanical parts of the disk drive, (2) controls the operation of the read/write heads, and (3) interfaces the floppy disk drive to the disk controller in the computer.

Connectors

On the back of the drive electronics circuit board are at least two connectors. The 4-pin, in-line connector supplies power to the drive. The 34-pin edge connector provides control signals to the drive and exchanges data between the drive and the disk controller in the computer.

Head Actuator

The head actuator assembly is a mechanical motor assembly that actually moves the heads over the disk. It does this by using a stepper motor. This motor moves in very small fixed increments or steps. Each increment of the stepper motor defines one track; therefore, if we want to read data on track 20, and the heads are at track 10, the stepper motor must be incremented 10 times to reach track 20.

Read/Write Head Assembly

Floppy disk drives have two read/write head assemblies, one for each side of the floppy disk. The heads are mounted on arms that connect to the head actuator assembly. Since the heads are mounted to a single head actuator, they move in unison with each other.

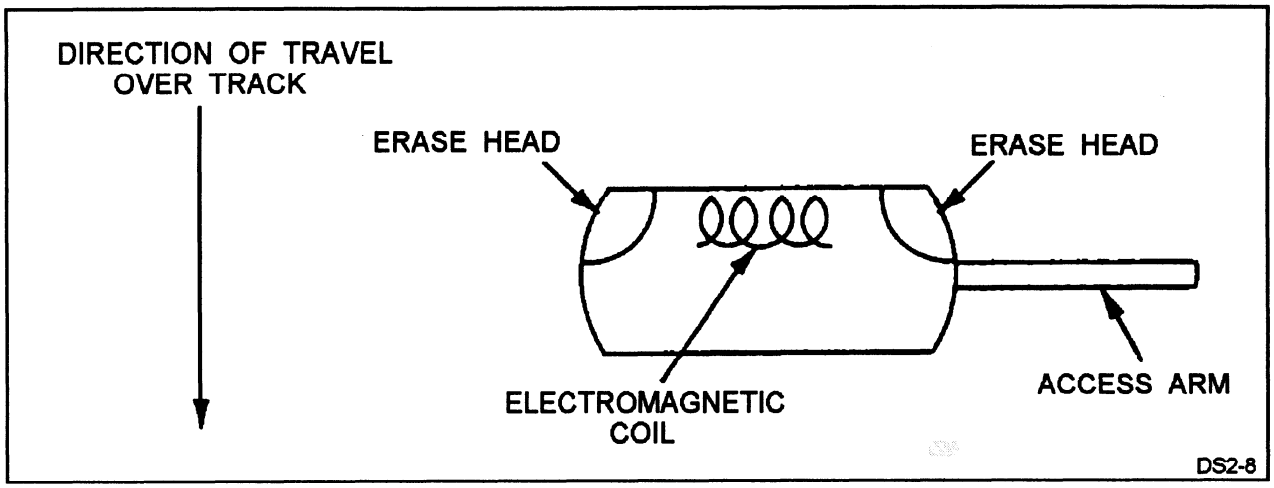

Figure 10-8.—Construction of a floppy disk drive read/write head.

HEAD CONSTRUCTION. —Heads are made of a soft ferrous material with electromagnetic coils for reading and writing. The read head picks up changes in magnetic flux as the disk moves past the head surface. An electric current fed through the write head creates a magnetic field around it. If the force of the magnetic field is strong enough, the area on the disk is also magnetized. By controlling the direction of current flow through the head, we can also control the direction of the magnetic field. The write (record) head is centered between two erase heads. Figure 10-8 illustrates the construction of a floppy disk drive read/write head.

ERASE HEAD OPERATION. —As data is written on the disk, the erase heads clip each edge of the track, ensuring that data from one track does not "spill over" to the next track. This form of recording is known as **tunnel erasure.**

DENSITY AND COERCIVITY

Density is the measure of how much data can be stored on a disk. The higher the density of the disk, the more data can be reliably stored on the disk. Disk density is measured in two ways: longitudinal density and linear density.

Longitudinal Density —Longitudinal density is defined by how many tracks per inch can be reliably written on a disk. Longitudinal density is generally expressed in tracks per inch (tpi).

Linear Density —Linear density is how many bits per inch (bpi) can be stored on a disk track.

Coercivity is the magnetic field strength required to properly record data. It is measured in oersteds. Coercivity is affectedly the magnetic material used and the thickness of the material.

The 5.25-Inch Disk Densities and Coercivities

The 5.25-inch disks are rated by their density capabilities and whether data can be stored on one or both sides. A 360K disk is rated as DSDD, or double-sided, double-density disk. The rating "double-density" on these disks goes back to the very early days of floppy disk development. Single-density disks are no longer manufactured and the DSDD disk is often called a low-density disk.

Table 10-5 show the common 5.25-inch disks in use today with their densities and coercivities.

Table 10-5.—The 5.25-Inch Disk Densities and Coercivities

DISK TYPE	TRACKS-PER-INCH	BITS-PER-INCH	FERROUS MATERIAL	COERCIVITY (OERSTEDS)	TRACK WIDTH
360K DSDD	48	5,876	Iron oxide	300	.33 mm
720K quad-density	96	5,876	Iron oxide	300	.16 mm
1.2M high-density	96	9,646	Cobalt	600	.16 mm

The 3.5-Inch Disk Densities and Coercivities

The 3.5-inch disks are constructed and rated in much the same way as 5.25-inch disks. Table 10-6 shows the densities and required coercivities for 3.5-inch disks.

USING LOW-DENSITY DISKS IN HIGH-DENSITY DRIVES

A high-density drive will read a low-density disk with no problems. A problem occurs when you try to use a high-density drive to write on a low-density disk that was previously used in a low-density drive. Referring back to table 10-5, you see that the track width on a 360K disk is approximately .33 mm. The tracks written by a 1.2M drive are approximately .16 mm. When you try to overwrite data that was originally produced by a 360K drive, you are writing a little skinny track through the middle of a wider track. If you take this disk back to a 360K drive, the bigger heads will not only try to read the skinny track but will also read some of the data that was supposed to have been overwritten by the high-density drive.

The only way to avoid these read errors is to format anew (unformatted) 5.25-inch disk in the high-density drive. Refer to your DOS user's manual for the proper command to format a 5.25-inch disk for 360K with a 1.2M drive. Use this disk to write any data that you want to transfer to the 360K drive.

Another problem can occur if you format a 360K, 5.25-inch disk as a 1.2M disk. DOS will allow this operation. Again referring back to table 10-5, you see that a 1.2M disk requires twice as much write current as a 360K disk. Writing this strong magnetic field on the iron oxide of a 360K disk will cause the bits written on the disk to change position. That is, adjacent opposite magnetic poles will migrate toward each other, and similar magnetic poles will migrate away from each other and your data will be lost.

The 3.5-inch drives do not have this problem, since the 1.44M disks have a high-density medium indicator hole in the disk case. If you try to format a 720K, 3.5-inch disk as a 1.44M disk, DOS generates an error message.

A high-density disk can **never** be used in a low-density drive. The low-density drive cannot generate the required write current to write data on a high-density disk.

FLOPPY DISK DRIVE INSTALLATION AND CONFIGURATION

The physical installation of a floppy drive in a personal computer is fairly simple. Remove the computer case, place the drive in the bracket supplied in the installation kit, and install the drive in the computer.

Configuring the drive for the computer is a bit more complicated. Most disk controller cards used in personal computers can control two floppy drives and two fixed disk drives. The floppy drives are usually daisy chained on the same cable to a single connector on the disk controller card. The drive electronics card has several jumpers including the following:

- Drive select jumper
- Terminating resistor
- Disk changeling/ready jumper
- Media sensor jumper

Drive Select Jumper

The drive select jumpers are located on the drive electronics card. They are usually labeled DS0, 1, 2, and 3. These designations are not standard and some manufacturers use different labels or numbers. The drive select jumpers could be labeled DS1, 2,3, and 4.

Before you can properly configure the drive address, it is important to check the floppy drive cable. The cable has three connectors, one at each end and one in the middle. Carefully examine the cable to determine if pins 10 through 16 are twisted near the end of one

Table 10-6.—The 3.5 Inch Disk Densities and Coercivities

DISK TYPE	TRACKS-PER-INCH	BITS-PER-INCH	FERROUS MATERIAL	COERCIVITY (OERSTEDS)	TRACK WIDTH
720K Disk	135	8,717	Cobalt	665	.115 mm
1.44M Disk	135	17,434	Cobalt	720	.115 mm

connector. Configuration procedures are different when a twisted cable is used rather than a straight cable.

INSTALLING A FLOPPY DRIVE WITH A STRAIGHT CABLE. —To install a floppy drive with a straight cable to be used as drive A, set the drive select jumper to DS0. Connect the end of the cable to this drive. To install a second drive (drive B), place the jumper in the second position (DS1) and connect the drive to the middle connector of the cable.

INSTALLING A FLOPPY DRIVE WITH A TWISTED CABLE. —The twisted cable was developed by manufacturers to retie assembling computers at the factory easier. With a twisted cable, both floppy drive select jumpers are set to DS1, and the twist in the cable provides the actual drive select. Table 10-7 shows how the twist works to select drives A and B.

To select a drive, both the motor enable signal and the drive select signal must be present. To select drive B, the controller would enable pins 12 and 16 and the drive would be turned on. To select drive A, the controller enables pins 10 and 14. Because of the twist, pin 10 is routed to pin 16 on drive A and pin 14 is routed to pin 12. Since drive A thinks it is drive 1, it turns on and works.

Terminating Resistor

Also on the drive electronics board is a terminating resistor. The terminating resistor looks like a standard 14-pin DIP IC. It maybe labeled TR or T-RES. The terminating resistor provides the proper load to the disk controller card, but only the floppy drive at the end of the cable is terminated. The floppy drive connected to the middle of the cable should have the terminating resistor removed. To remove this resistor, simply pull it out of the socket. Some manufacturers solder the terminating resistor in place and use a jumper to take it out of the circuit.

Disk Changeline/Ready Jumper

The disk changeling/ready jumper is used to indicate the disk has been changed and therefore the directory must be reread.

Media Sensor Jumper

The media sensor jumper is only found in 3.5-inch, 1.44M floppy drives. It enables the media sensor to inform a high-density drive when a 720K disk has been loaded into the drive. By sensing the type of disk loaded, the drive can control the write current for high- and low-density disks and prevent improper formatting of a disk. Enabling and disabling the media sensor varies with manufacturer, so you will need to refer to the installation instructions to properly configure the drive.

FLOPPY DISK CARE AND HANDLING

Floppy disks are very durable and reliable with a minimum of care. Inserting a 5.25-inch disk in its storage envelope and storing the disk in a disk file box is the best practice for storing disks. The 3.5-inch disk's plastic case and shutter eliminate the need for the storage envelope. These are best stored in a disk file box designed for 3.5-inch disks. Other precautions for handling disks are illustrated in figure 10-9.

Referring to figure 10-9, precaution 4 states that you should keep disks away from machines with magnetic parts. We all know that the large power transformers aboard ships can generate electromagnetic fields that can damage disks. But these electromagnetic fields can be in places we don't ever think about. A

Table 10-7.—Interface Connections between the Floppy Controller and Drives (Twisted Cable)

CONTROLLER PIN	FUNCTION	DRIVE B PIN	FUNCTION	DRIVE A PIN	FUNCTION
10	Motor enable for A	10	Select drive 0	16	Drive motor on
12	Select B	12	Select drive 1	14	Select drive 2
14	Select A	14	Select drive 2	12	Select drive 1
16	Motor enable for B	16	Drive motor on	10	Select drive 0

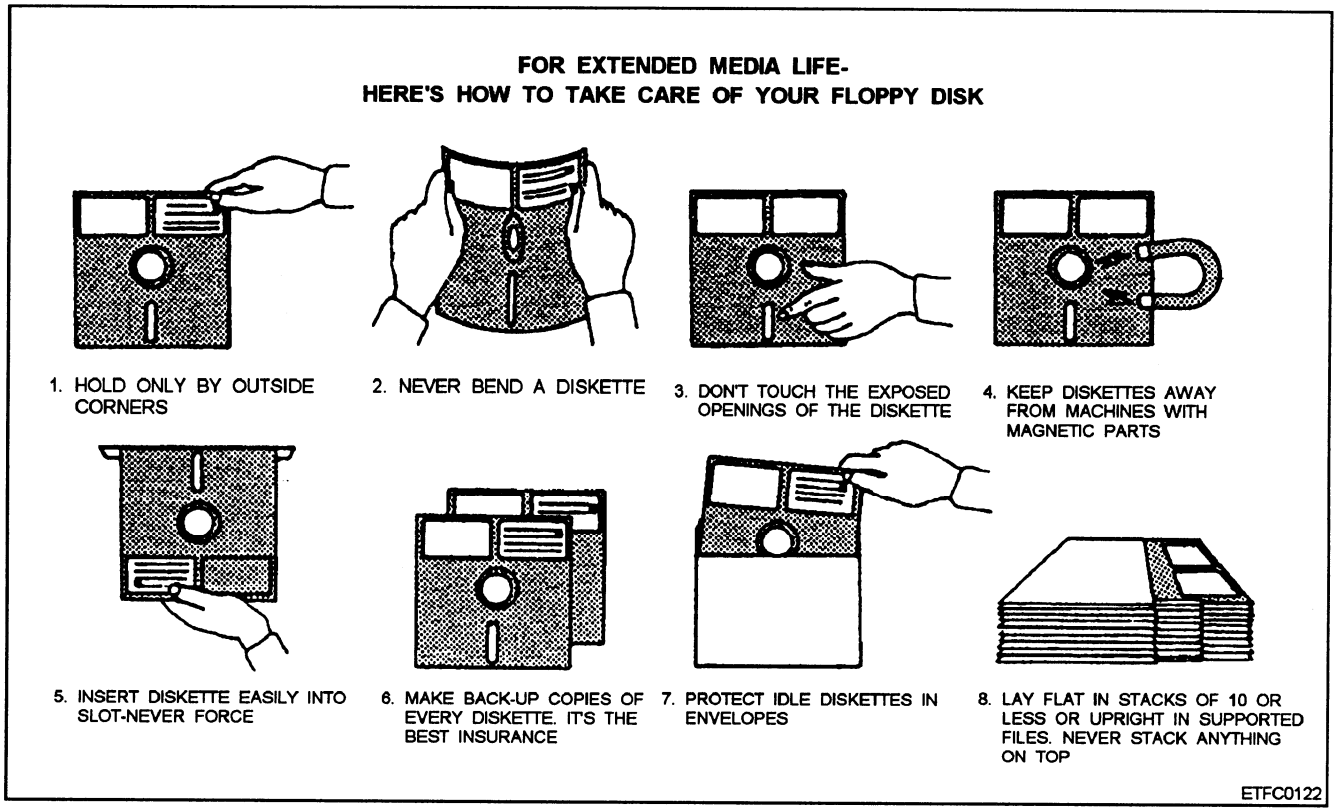

Figure 10-9.—Floppy disk handling precautions.

telephone with a bell ringer uses an electromagnet to ring the bell. If you keep a disk next to a phone, every time the phone rings a 90-volt electromagnetic field is generated around the phone. In time, the data on your disk will start to mysteriously disappear. Another hidden electromagnetic field is in the monitor connected to your personal computer. Almost all monitors manufactured today have an automatic degaussing circuit. This circuit is design to demagnetize the screen of the cathode-ray tube (CRT) by generating a large electromagnetic field every time the monitor is turned on. Again, your data starts disappearing.

Despite your best efforts to protect your disks, disaster can strike. For example, a cup of sugar and cream laden coffee spills on your 5.25-inch disk. You have no back-up copy of this disk and to reconstruct the data will take several weeks. What to do? The following procedure is considered an emergency recovery procedure and should be used only in emergency situations.

First, take the damaged disk and very carefully cut the top edge of the disk cover. Remove the disk and wash it in a mild detergent with very light pressure to avoid damaging the oxide coating. Rinse the disk thoroughly. Dry the disk by laying it flat on a lint free cloth and allow it to dry completely for at least 24 hours.

When the disk is dry, take a new disk and cut the protective rover and remove the disk. Throw away the new disk. We have to **sacrifice the** disk to get a clean cover. Place the damaged disk in the new cover and carefully tape the top closed. Insert the disk into the drive and copy the information onto another disk. Discard the damaged disk when you have finished copying it.

TOPIC 3—DISK MEMORY SETS

Magnetic disk memory sets are mass storage systems used to store large amounts of computer data on interchangeable disk packs. A magnetic disk set can be configured to operate with shipboard or shore-based computers using parallel 16- or 32-bit CDS computer channels and is found in a variety of mainframe systems.

A magnetic disk memory set is composed of variable configurations of magnetic disk recorder/ reproducers (disk unit controllers) and disk memory units (memory units) housed in air-cooled or water-cooled electronic equipment cabinets.

Our study of disk memory sets uses the AN/UYH-3 as the main example, but the functions described are similar to other disk memory sets used in the Navy.

The magnetic disk recorder/reproducer (RD) or disk unit controller contains the circuitry to control the reading and writing of data on a disk pack. It also controls the interface with the computer. The disk unit can control from one to four memory units (disk packs).

The memory units (MUs) contain only the logic circuitry to record data on and read data from their own disk packs. They do not contain controllers. They operate only as slave units to the disk unit controller.

MAGNETIC DISK PACKS

The recording medium for a magnetic disk memory set is a removable disk pack made up of one to over ten 14-inch disks, depending on the type.

Disk Pack Construction

The disks are coated with magnetic iron oxide. The top and bottom platters of some disk packs are used as protection for the inner disks recording surfaces. The disk pack comes with a storage canister consisting of a top and bottom cover as shown in figure 10-10. The top cover is used to install the disk pack in the desired disk or memory unit and to remove the disk pack from a unit for storage. The bottom cover is removed just before installation of the disk pack and replaced after the disk pack has been removed from a unit to protect the disk pack from physical damage and contamination.

Disk Pack Data Surfaces

Looking at a disk pack with five platters, the top and bottom platters are used to protect the six inside surfaces (fig. 2-10). Five of the six inner disk surfaces are used for data storage. Each recording surface contains 823 tracks. Of the 823 tracks, 822 are addressable and can be used for data storage with the remaining track being used for maintenance applications. The tracks occupy a 2-inch band around the circumference of the disk's recording surface. The individual tracks are .0026-inches apart. Each track can store 6,038 BPI with a storage capacity per disk pack (5 recording surfaces) of 640 million bits (megabits).

Disk Servo Surface

The sixth surface, called the servo surface, contains prerecorded dibits used to control the movement of the read/write heads to the desired position (cylinder) on the recording surfaces, and to maintain alignment of the read/write heads over the centerline of the track. Dibit is an abbreviation of a dipole bit. It is an analog bit with a positive or negative signal used to indicate odd or even tracks on the disk. As the read-only servo head moves

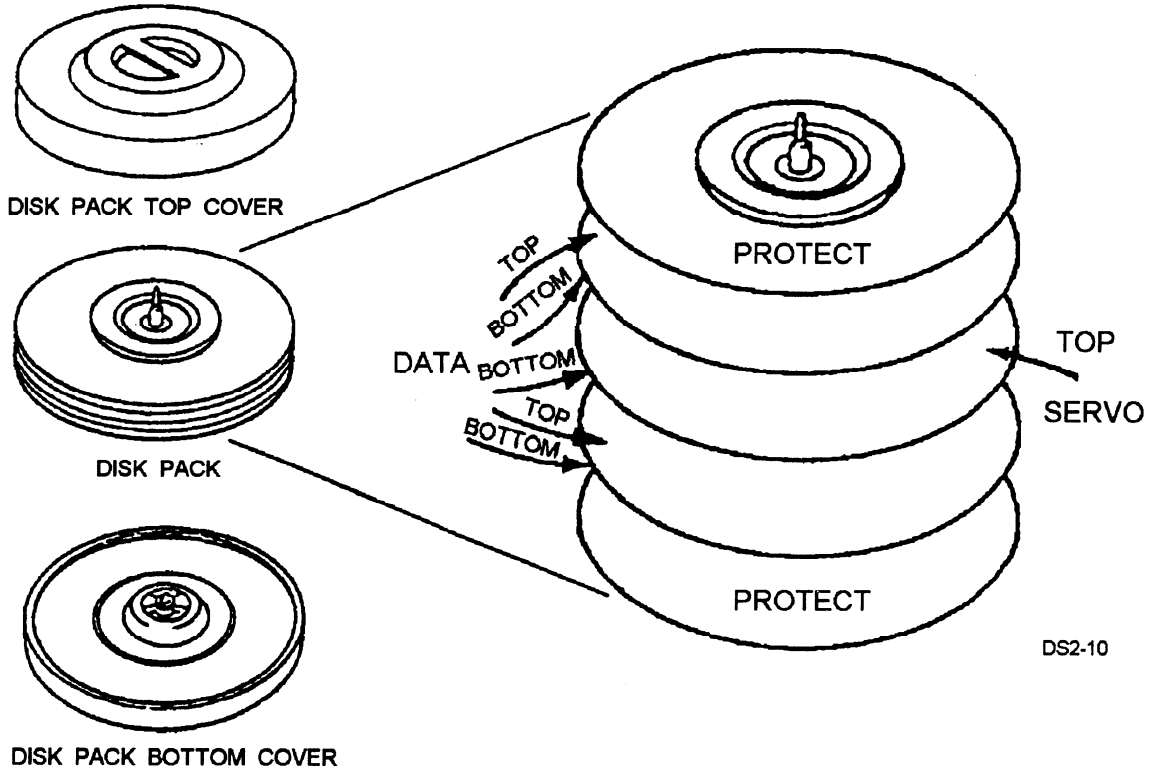

Figure 10-10.—A disk pack and storage canister.

across a track, the signal from the dipole bits are summed. When the result of this summing equals zero, or null, the heads are centered on track.

During a seek operation, the heads move across the dibit tracks, a counter is incremented for each track crossed. The heads continue to move until the counter reaches the desired track.

DISK FILE UNIT CONTROLS AND INDICATORS

The disk memory set can be controlled from several control panels. These are as follows:

- Operator's panel
- Status/maintenance panel
- Disk status panel
- Power supply panel

Operator's Panel

Atypical operator's panel is shown in figure 10-11. It contains the switches and indicators used to turn the disk file or memory unit (MAIN POWER) and spindle drive motor (SPDL MOTOR) on, and to indicate the readiness of the disk drive (DISK STATUS) and controller (CONTROLLER STATUS) during and after the power on sequence.

The operator's panel. also indicates the disk drive address (LOGIC UNIT). The READY indicator is lit when the disk rotation is up to speed, the heads are loaded, and no-fault conditions exist. It also indicates when the disk is protected from a write operation by switch action or fault condition (WRITE PROTECT). In addition the FAULT indicator indicates the detection of a variety of faults as defined by the STATUS/ MAINTENANCE PANEL fault indicators.

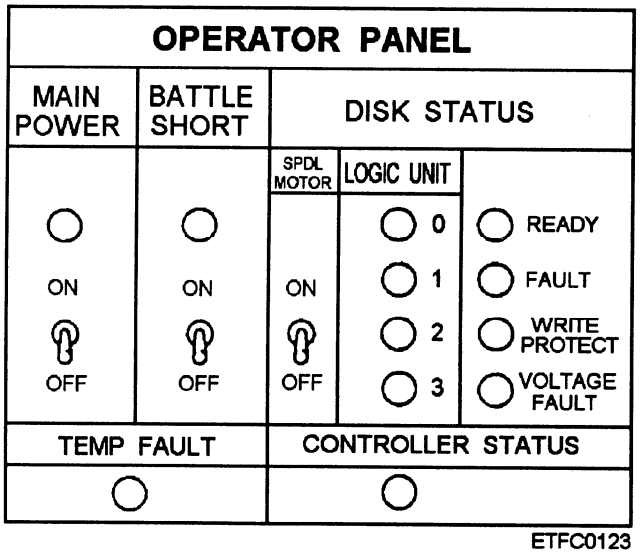

Figure 10-11.—A disk memory set operator's panel.

Status/Maintenance Panel

The status/maintenance panel, shown in figure 10-12, is found on the disk unit. The panel is controlled by a microprocessor and contains the ELAPSED TIME meter, the WRITE PROTECT (this unit's drive only) switch, the LOGIC UNIT SELECT CODE (disk drive address 0, 1, 2, or 3) switches, and some fault and status indicators for the disk drive (3,100 RPM, TEMP FAULT, COVER LOCK) The 3,100 rpm indicator is illuminated when the spindle has reached normal rotation speed. TEMP FAULT indicates an abnormal temperature condition. COVER LOCK indicates the spindle is rotating more than 175 rpm and the shroud cover is locked, a normal condition.

The remainder of the panel is used for operator command entry and status message display readout. The FUNCTION/MESSAGE digital display comprises four digits of the five-element display. The FUNCTION/MESSAGE readout is used to enter a large variety of hexadecimal coded operator commands or responses (FUNCTIONS), and for displaying controller coded displays (MESSAGEs) for the operator or

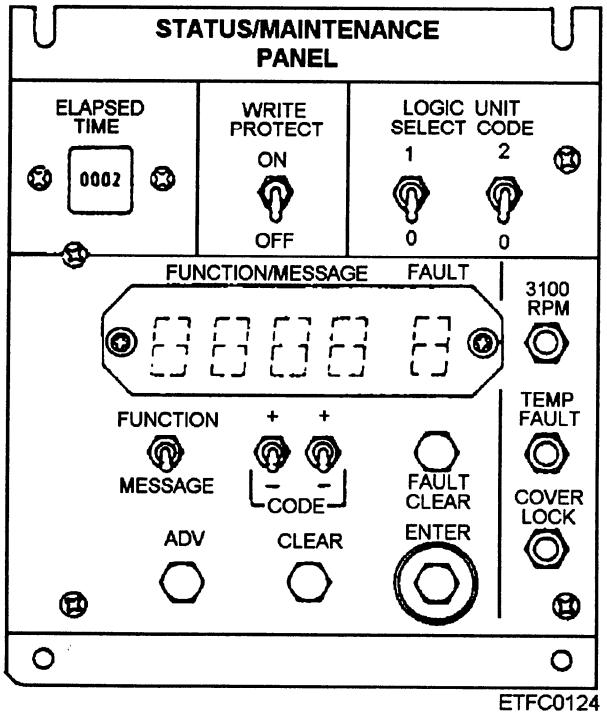

Figure 10-12.—A status/maintenance panel (disk unit only).

technician. The single-digit FAULT indicator displays one of eight fault codes as defined in table 10-8.

Table 10-8.—Status/Maintenance Panel Fault Codes

FAULT CODE	CONDITION
1	Voltage fault—Indicates one of the following undervoltage conditions exists: ±5, ±11, ±20, ±40 vdc.
2	Multiple heads selected fault—Indicates disk logic has selected two or more heads at the same time.
3	No heads selected fault—Head number greater than 4 selected. Fault code is cleared only when a valid head is selected.
4	(Write or read) and off cylinder fault—Indicates a write or read is being attempted and heads are not properly positioned on selected cylinder.
5	Seek error—Indicates selected cylinder was not found in allowed time, or a cylinder address greater than 336 hex was selected.
6	Servo track fault—Loss of servo track. Indicates that dibit signals were not detected for 350 msec. Pressing FAULT CLEAR turns off indicator and loads heads.
7	Both read and write fault—Indicates that both read and write circuits are active at the same time.
8	Write fault—A write problem exists on the write driver.

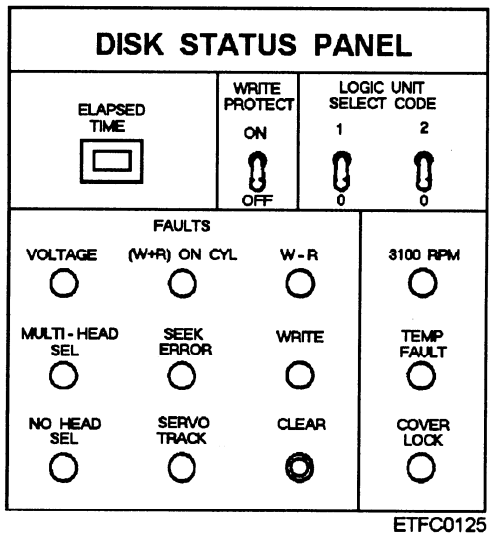

Figure 10-13.—A disk status panel (memory unit only).

Disk Status Panel

The disk status panel, shown in figure 10-13, is found on the memory unit (MU). It performs the same functions as a status/maintenance panel with the exception of the FUNCTION/MESSAGE and FAULT readout. As the memory units do not have a controller, the readout is replaced by a number of FAULT indicators and a CLEAR push button. The faults indicated are the same as the eight fault readout conditions listed in table 10-8. The CLEAR pushbutton does not clear the fault condition, it clears the indicators only if the fault condition causing the indication has been corrected.

Some disk memory sets have a FORMAT WRITE PROTECT switch. It is designed to protect the disk packs from being inadvertently formatted when the pack contains data that would be lost. When the switch is in the ON position, disk pack testing commands from the CDS computer and formatting commands from the CDS computer or the STATUS/MAINTENANCE panel are rejected. If the disk memory set in your system has this switch, it should be left in the ON position except when a disk pack is being tested or formatted.

Power Supply Panel

The power supply panel shown in figure 10-14 contains switches for MAIN POWER and for advancing the FAULT DISPLAY (FAULT ADVANCE) in the event of multiple power supply faults. A two-digit FAULT DISPLAY displays a two-digit code indicating POWER ON status or fault condition.

DISK MEMORY SET CONTROLLER

The controller has five functional areas as shown in figure 10-15. They are as follows:

- Microprocessor
- Buffer memory
- Controller to disk drive interface
- Data bus control unit (DBCU)
- CDS channel interface

Controller Intercommunications

The functional areas of the controller are interfaced by a bus arrangement. Two buses are used: (1) the processor input and output bus and (2) the data bus. All data and commands to/from the microprocessor move

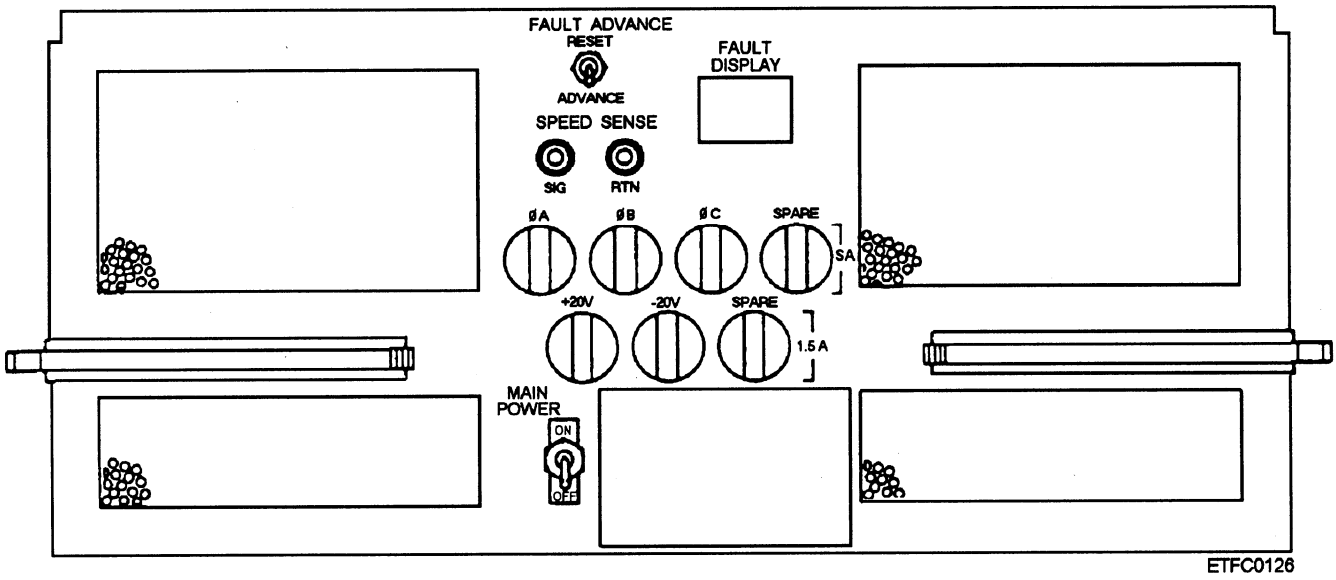

Figure 10-14.—A power supply panel.

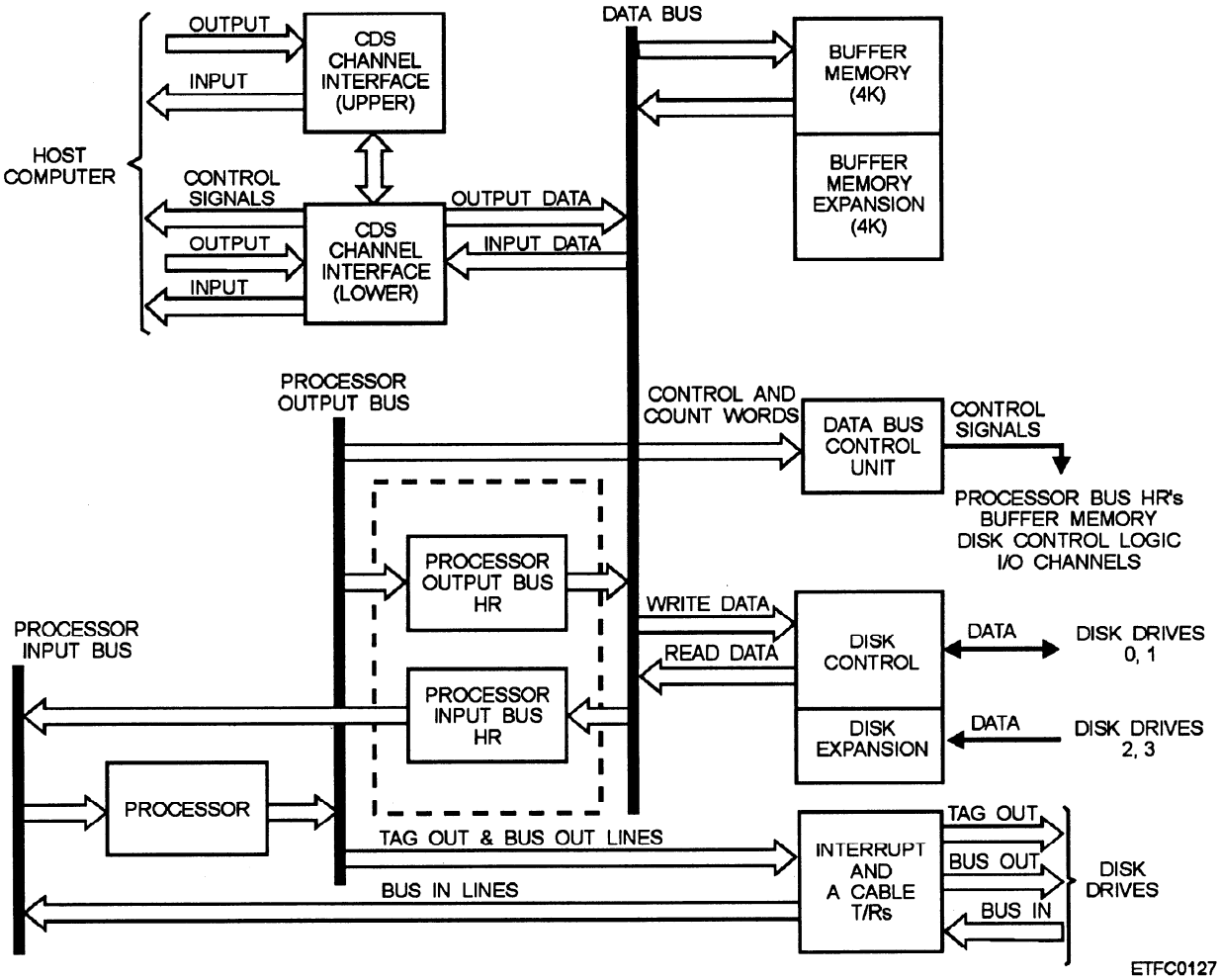

Figure 10-15.—A controller block diagram.

on the processor input or output bus. The processor input and output bus allows the microprocessor to communicate directly with the disk drives and the data bus control unit. Two holding registers, the processor input bus holding register and the processor output bus holding register, allow the microprocessor to receive data from and send data over the data bus.

The 16-bit bidirectional data bus is used primarily to transfer read/write data, external function commands, interrupt codes, and status codes between the CDS channel interface, buffer memory, the disk control logic, and the microprocessor bus holding registers. The data bus control unit, under control of the microprocessor, directs the flow of data over the data bus.

Microprocessor

The microprocessor controls the overall operation of the controller circuitry and therefore the overall operation of the magnetic disk set. All communications between the microprocessor and other elements of the controller pass over the processor input or output buses.

The actions of the microprocessor are governed by 8,192 microinstruction stored as firmware in read-only memory (ROM) or micromemory. Address logic in the microprocessor determines which instructions will be read out of micromemory and executed. Under normal operation, a microinstruction is read out of micromemory and executed every 250 nanoseconds. The address of the next microinstruction to be executed may be conditional, depending on the presence or absence of a condition, signal, or interrupt, or the next instruction to be executed may be unconditionally specified by the current microinstruction.

A large variety of hardware conditions is sensed by the microprocessor logic in determining the microinstruction to be executed. Much of the information used by the microprocessor is contained in a look-up table. The look-up table is a 2,048 address ROM containing the following information: micromemory jump addresses, data masks, constants, and code conversion tables for the status/maintenance panel function/message codes.

Additional random access memory (RAM) is provided by 256 16-bit words of RAM called the FILE. The file is used for temporary storage of diagnostic test parameters and other variable quantities during operation of the magnetic disk set.

Buffer Memory

Buffer memory is used to prevent the loss of data when reading from or writing onto disk. The CDS channel interface and the disk drives may operate at different speeds. A direct transfer from the channel interface to the drive could result in the loss of data. The 4,096 16-bit addresses of buffer memory, expandable to 8,192 addresses, are used as a temporary storage area for blocks of data when performing read or write operations.

During a write operation, data is transferred from the CDS channel interface over the data bus to the random access buffer memory and stored in blocks. The blocks of data are then transferred a word at a time over the 16-bit data bus to the disk control logic and written on disk. The opposite applies in a read operation. Data is read from disk and transferred into buffer memory and then transferred to the channel interface for input to the computer. Read and write operations do not occur at the same time.

Controller to Disk Drive Interface

The controller to disk drive interface provides for control of up to four disk drives, one internal to the disk unit and up to three drives installed in memory units. As shown in figure 10-16, there are two separate

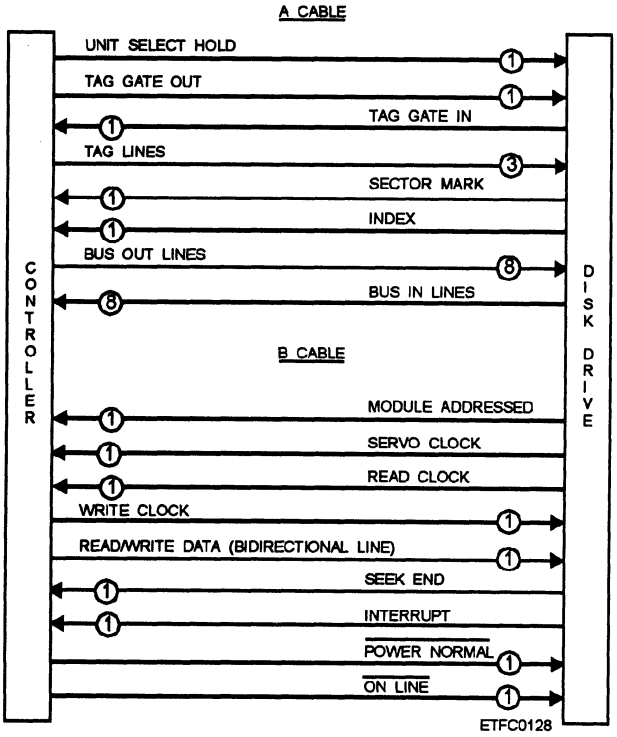

Figure 10-16.—A cable and B cable interfaces and signals.

interfaces with each disk drive, one from the microprocessor called the A CABLE and one from the disk control logic called the B CABLE. The two interfaces combine to provide all timing, control, and data lines needed for disk drive operation.

THE A CABLE. —The A cable connects the disk drives to the processor input and output buses. The disk drives are daisy chained on the A cable and only the selected drive will respond to the microprocessor commands.

The A cable is used for microprocessor control of the drives. The microprocessor passes commands to the drives using three command lines called TAG lines and eight BUS OUT lines. The three-bit TAG CODE on the tag lines identifies the type of command while the bus out lines carry the command code or address data to the drives.

Status data from the selected disk drive is passed over eight bus in lines to the microprocessor. Additional sector mark and index signals are sent from the selected drive to the microprocessor.

THE B CABLE. —The B cable connects the individual disk drives with the disk control logic. Each disk drive has its own unique B cable.

The B cable is used for read/write operations. The selected disk drive (A cable under microprocessor control) sends a MODULE ADDRESSED signal to the disk control logic indicating it has been selected. The selected drive provides a SEEK END signal indicating it has positioned the heads over the addressed cylinder and an INTERRUPT signal indicating the start of the addressed sector. Both the seek and sector addressing operations are controlled by the microprocessor over the A cable.

Timing for the read/write operations is provided by the SERVO CLOCK and READ or WRITE CLOCK signals. The servo clock originates from reading the servo track dibits on the servo surface of the disk pack. The servo clock provides the basic timing for the read/write operations. The read clock is generated by the disk drive during the read operation and is used to control the transfer of the serial read data from the drive to the disk control logic. The write clock is generated by the disk control logic during a write operation and is used to control the transfer of serial data over the bidirectional line to the disk drive.

DISK CONTROL LOGIC. —The disk control logic is used during read/write operations. Its two major functions are (1) to convert the parallel 16-bit data words from the data bus into a serial nonreturn-to-zero (NRZ) pulse train (B cable) when writing to disk and (2) to convert the NRZ pulse train inning from the selected disk into parallel 16-bit words for output on the data bus during read operations.

The disk control logic is enabled by the microprocessor and provides requests to the DBCU for data transfer with buffer memory when reading or writing. Overall timing for read and write operations is provided by the SERVO CLOCK signal. The SEEK END and INTERRUPT signals (B cable) notify the disk control logic when to begin read/write operations.

Data Bus Control Unit (DBCU)

The data bus control unit (DBCU) controls the transfer of data from source to destination on the data bus. The microprocessor defines the source, destination, and number of words to be transferred (buffer length) to the DBCU. The DBCU transfers the data a word at a time from the specified source to the specified destination until the transfer is complete.

The DBCU contains a control file and a count file that contain the necessary information to control the data exchanges. The control and count files are loaded by the microprocessor definition commands. Once the files are loaded, the actual data transfers occur on a request basis. The requests for data bus transfers are handled on a priority basis. The highest priority transfers are between the disk control logic and buffer memory (read/write operations). Next come the processor input and output holding register requests and the lowest in priority are the input/output channel requests.

CDS Channel Interface

The CDS channel interface controls all data exchanges between the magnetic disk set and the CDS computer. The interface can be configured for up to four 16-bit or 32-bit parallel input/output channels. Basic I/O operations including external functions, interrupts, and input/output data transfers are controlled by the interface logic.

DISK DRIVE UNIT

The addressable disk drives (0, 1, 2, 3) contain the electromechanical portions of the magnetic disk set and the read/write circuitry. The disk drive performs the actual recording and reading back of data as commanded by the controller logic contained in the disk

unit. The controller selects the desired head and direct seeks the read/write head assemblies to the selected cylinder position. During a write operation, data is output from the controller buffer memory to the disk write circuitry and recorded on the disk using the modified frequency modulation (MFM) encoding method. Modified frequency modulation encoding is covered in detail later in this chapter. During a read operation the drive recovers data from the disk and transfers it to the controller.

The disk drive uses a motor driven belt and pulley arrangement to rotate the mounted disk pack at a speed of 3,600 rpm ± 3.5%. The speed of disk pack rotation is monitored by a spur gear and photodcell arrangement.

The read/write heads, five addressable read/write heads, and one read-only head (servo head) are mounted on arm assemblies controlled by an actuator assembly. The disk pack must be rotating above 3,100 rpm before the actuator assembly will load the heads or move them over the recording surfaces. The heads are designed to float above the disk pack recording surfaces on the air cushion provided by the high-speed rotation. Any contact between the read/write heads and the disk recording surfaces will result in a head crash and damage to both heads and recording surfaces. The heads are automatically unloaded or retracted if the drive motor power is turned off or the rotation speed of the disk pack drops below 3,100 rpm.

The movement of the read/write heads to the desired cylinder position is controlled by a closed-loop servo system. Prerecorded data written on the servo surface is used to (1) determine the present position of the read/write heads, (2) control the movement of the read/write heads when seeking a new cylinder, and (3) maintain alignment of the heads to the tracks on the recording surfaces when data is being read or written.

The disk drive is divided into the following electronic and electromechanical assemblies and functional areas:

- Drive motor assembly
- Spindle assembly
- Speed sensor
- Actuator assembly
- Velocity transducer
- Head/arm assemblies
- Servo circuit
- Track servo circuit
- Read/write circuits

Drive Motor Assembly

The drive motor, which drives the spindle assembly, is a 1/2-horsepower induction motor. Power is transferred to the spindle via a flat, smooth surfaced belt that connects the pulleys of the spindle and drive motor. The speed of the drive motor is sensed by an optical switch and controlled by the motor supply module in the power supply.

Spindle Assembly

The spindle assembly is the physical interface between the disk drive and the disk pack. The surface of the disk pack mounting plate on the spindle mates directly with the center of the disk pack. Mating surfaces of the disk pack and spindle are engaged by rotating the cover handle of the disk pack when you install the pack in the drive. When the pack and the spindle are fully engaged, the canister cover is released from the disk pack. You can then remove the cover.

The spindle is driven by the drive belt, which connects the spindle to the drive motor pulley. A static ground spring is mounted at the lower end of the spindle assembly to protect against the buildup of a static charge. A spur gear is mounted on the lower end of the spindle drive shaft. The teeth of the gear pass through the optical switch and are used as part of the speed sensor.

Speed Sensor

The speed sensor monitors and controls the rotating speed of the spindle and its attached disk pack. The speed sensor is made up of the spur gear and the speed sensor photocell in the optical switch. The teeth of the spur gear pass through and interrupt the light path between the emitter lamp and photocell. The pulsed output generated by the speed sensor is sent to the power supply module. The power supply varies the drive motor current to control the speed of the drive motor and to maintain spindle speed within the required limits.

Actuator Assembly

The actuator assembly is the mechanism that supports and moves the head/arm assemblies. The actuator is made up of a carriage and voice coil

assembly, a rail bracket assembly, and a magnet assembly.

The carriage is attached to the voice coil. The carriage supports the head/arm assemblies and provides the vehicle for head/arm positioning. The voice coil moves the carriage in (extended) or out (retracted) as determined by servo logic commands.

The rail bracket assembly provides a stable support and guide for carriage movement. The carriage bearings move along the upper and lower carriage rails as the carriage is extended or retracted by the voice coil.

The magnet assembly is a very strong permanent magnet that forms the core of the voice coil and is used to mount components of the velocity transducer.

Velocity Transducer

The velocity transducer helps to control the acceleration and deceleration of the carriage assembly during seek operations. The transducer coil has a voltage induced in it by the motion of the transducer core attached to the carriage. The voltage polarity and amplitude are sensed by an operational amplifier and used to indicate the direction and speed of carriage assembly movement to the servo circuit logic.

Head/Arm Assemblies

There are six head/arm assemblies in each disk drive. One of the head/arms holds the read-only servo head. The other five assemblies hold read/write heads. The servo head/arm assembly and two of the read/write head/arm assemblies are upper surface head/arm assemblies. The three remaining read/write head/arm assemblies are lower surface head/arm assemblies.

The read/write heads are mounted on cam controlled head load springs. As the head/arm assemblies are loaded (extended) the head load springs apply force (loading force) to the read/write heads to move them toward the rapidly spinning disk surface (3,100 rpm minimum). The air cushion above the surface of the disk causes the head to float above the recording surface. As the head assemblies are unloaded (retracted), the head spring loading force is restrictedly the cams and the heads are moved away from the recording surface.

Servo Circuit

The servo circuit is a closed-loop servo system. It is used to move the read/write heads to the desired (addressed) cylinder when commanded by the controller. The servo circuit is designed to maintain a NULL or 0 voltage when the heads are in the correct cylinder position. A position error signal is used to indicate when the heads are not in the proper cylinder location. The position error is fed to the voice coil and results in carriage movement toward the addressed cylinder. A feedback signal is developed using the velocity transducer to oppose the position error and to dampen carriage movement for smoother operation.

Track Servo Circuit

The track servo circuit is used for maintaining head position over the track centerline. The track servo circuit positions the read/write heads based on information obtained from the servo tracks written on the servo surface of the disk pack. The read-only servo head reads the data written on the servo tracks and is positioned accordingly. The read/write heads mounted above (heads 0 and 1) and below (heads 2, 3, and 4) the servo head are physically aligned to the servo head. By positioning the servo head, all read/write heads are positioned over the center of the correct track on their respective recording surface of the cylinder.

Read/Write Circuits

The read/write circuits perform the following functions:

- When writing, they (1) convert serial NRZ signals from the disk control logic to MFM data signals, and (2) generate and control drive current to the write heads for developing the flux fields used to store information on the disk surface.

- When reading, they (1) detect flux changes from the disk, (2) convert the analog MFM signals to digital MFM data, (3) convert MFM data to NRZ serial pulse train and send it to the disk control logic, and (4) generate the read clock signal.

DISK MEMORY SET OPERATIONS

The disk memory set receives data from the host computer for storage on the disk and retrieves data from the disk and transfers it to the computer. Because of the relatively fast access time of the disk memory set, the host computer uses the disk as temporary storage of data as well as permanent storage of programs and data. Before a disk can be used, it must first be formatted.

Disk Formatting Operations

Disk memory sets can format disks in a variety of modes to match the host computer's operating system. The formatting of a disk pack is very similar to that of a floppy disk in that the tracks and sectors are written on each data surface. The locations of the tracks are controlled by the servo tracks that are prerecorded on disk surface. The number of sectors per track is selectable by either the SECTOR SELECT switch or a set sector size command from the computer. In the file management mode, the disk will have nine sectors per track, with 512 32-bit words per sector.

Formatting a disk can be done offline using the status/maintenance panel entries or online using the format disk command. A disk pack can be partitioned so that part of the disk pack is formatted in one mode and another part of the disk pack is formatted in a different mode. If a disk pack is partitioned operating system must be able to operate with the two modes.

Write Operation

A write operation is initiated by the computer via an external function. This external function defines how many words are to be written and whereon the disk they will be written. The disk memory set then receives the data and stores it in buffer memory.

Once the proper cylinder and track have been reached, the first word is transferred from buffer memory to the write data holding register. The write data holding register transfers the data to a shift register that converts it to a nonreturn to zero (NRZ) serial pulse train. This serial data is then sent to the disk drive's NRZ-to-MFM converter via the B cable read/write data line.

The NRZ-to-MFM converter converts the pulse train into MFM data and sends it to the write drivers. The write drivers develop the proper write current for the heads to record data on the disk. When the entire word is written, a signal is sent to the controller, indicating that the disk is ready to write the next word and the cycle is repeated.

Read Operation

A read operation is also initiated by an external function defining cylinder, track, head, and number of words to be read from the disk. The heads are positioned to the right cylinder address, and the data is read from the disk. The serial MFM data is converted to a digital NRZ pulse train and sent to the controller's shift register.

The shift register gates in each bit and transfers the data to the read data holding register. The read data holding register transfers the word to the buffer memory where it is stored until it is transferred to the computer.

MAGNETIC DISK PACK CARE AND HANDLING

Because of the rotation speed of the disk pack in a disk memory set, the heads are designed to float or fly on a cushion of air. The distance the heads fly above the disk is called the flying height of the heads. As densities of disks have increased, the flying height of the heads has decreased to a point where <u>any</u> contaminant is larger than the flying height of the head. Figure 10-17 shows an example of the flying height of the head compared with common contaminants such as smoke, dust, fingerprints, and hair.

> **WARNING**
>
> Never attempt to remove a disk pack from a drive until all rotation of the disk pack has stopped.

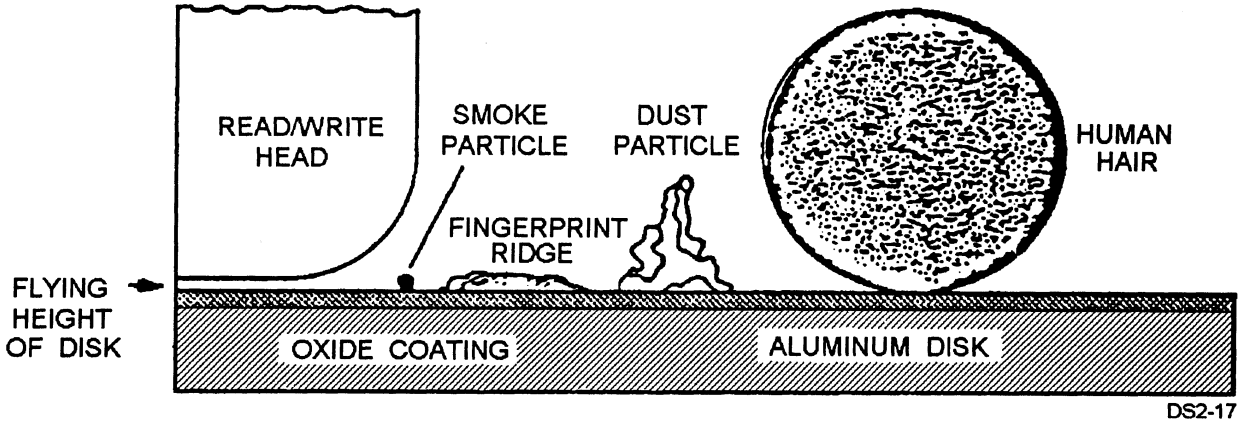

Figure 10-17.—The flying height of a disk read/write head compared to common contaminants.

The following guidelines will help you keep your disk pack in peak condition:

- Always keep the disk pack in its container when it is not being used.
- Reassemble the disk pack canister, even when it is empty.
- Never touch the disk pack's recording surfaces.
- Do not expose the disk pack to stray magnetic fields.
- Always store a disk pack flat. Never store a disk pack on its edge.
- Store the disk pack in the same environment in which the disk memory set operates.

TOPIC 4—FIXED HARD DISK SYSTEMS

Fixed hard disk systems are commonly found in minicomputers and microcomputers. They are called fixed disks because the disk is enclosed in a sealed case and is inaccessible to the user.

The technology of these disk drives is one of the fastest changing in the computer world. In the 14 years that fixed disks drives have been in common use, capacities have increased from 10 megabytes on a 5.25-inch full height drive, to over 10 gigabytes on a 3.5-inch half height drive. Additionally, data transfer rates have increased ten-fold, while the average seek times have decreased from more than 85 milliseconds (ins) to less than 10 ms. The cost of these systems has also decreased significantly. A 10 MB drive originally cost about $1,500.00 or an average of $150.00 per megabyte of disk space. Today the cost is less than $0.25 per megabyte.

FIXED HARD DISK DRIVE CONSTRUCTION

Most fixed disk systems have the same basic components and similar operational characteristics. A typical hard drive's components include:

- Disk platters
- Head actuator assembly
- Read/write head assembly
- Cables and connectors

The heads, head actuator, and platters are usually contained in a sealed unit commonly referred to as a head disk assembly (HDA). The HDA requires a dust free environment when opened to avoid contaminating the disk. Figure 10-18 illustrates atypical fixed disk.

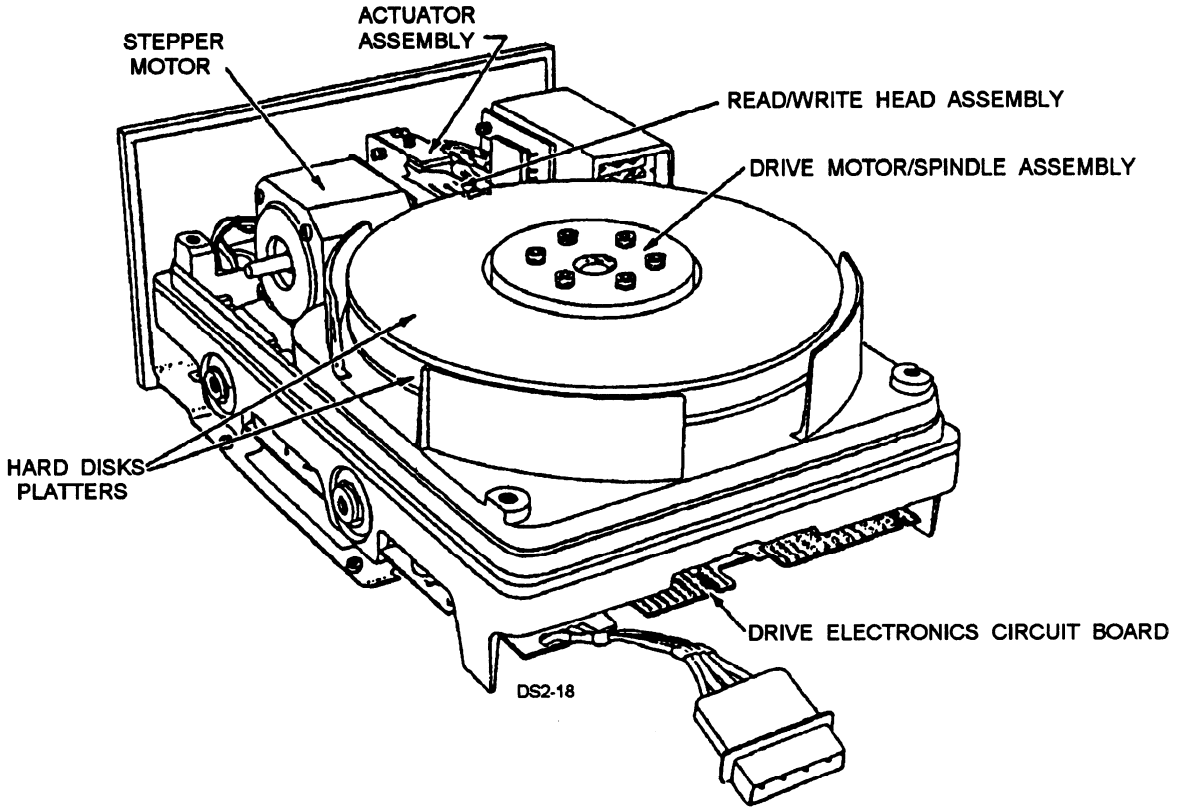

Figure 10-18.—A typical fixed disk drive assembly.

Disk Platters

The size of the disks platters varies, depending on intended use, capacity, and speed. Sizes of the disk platters commonly used are 5.25-inch, 3.5-inch and 2-inch.

Fixed disk systems may contain from 1 to 11 platters, depending on size and capacity. The number of platters in a drive is limited by the size of the drive. Half-height 5.25- and 3.5-inch drives contain a maximum of eight platters. Full-height drives are currently limited to 11 platters. Since the platters are sealed in the HDA, all of the surfaces are used for data storage.

Platters are made of aluminum alloy metal coated with a magnetic material (medium). The two most common media for fixed disk platters are iron oxide and thin film.

IRON OXIDE COATED PLATTERS. —Iron oxide platters are found in many older low-density drives. The oxide is applied to the platter, then cured and polished. The iron oxide is generally applied to a thickness of 30 millionths of an inch. After the platter is polished, a protective lubricant is applied to help prevent damage caused by head crashes.

THIN FILM COATED PLATTERS. —Thin film coated platters can hold much greater data densities because the magnetic coating is much thinner and more perfectly formed than the iron oxide coating. Two processes, plating and sputtering, are used to manufacture thin film disks.

Platting —Platting is a process in which the medium is applied to the disk using an electroplating mechanism. The final layer is a cobalt alloy of approximately 3 millionths of an inch.

Sputtering —Sputtering is a process in which the cobalt alloy is applied in a near vacuum. The magnetic material, as thin as 2 millionths of an inch, is deposited on the disk in much the same way metallic films are applied to silicon chips in the creation of semiconductors. A hard carbon coating is then applied to protect the disk.

The result, on both plated and sputtered disks, is an extremely thin and hard medium on the disk. The hard surface increases the probability that the disk will survive a high-speed head crash with little or no damage.

Head Crash Effects

A head crash occurs whenever the heads come in contact with the disk's surface. Severe damage can occur if the heads crash with the disk spinning at full speed. The heads can scratch the oxide material or the heads themselves can be damaged. Whenever the disk is powered down, there is a minor head crash as the disk slows down. Many fixed disks have a designated landing zone for the heads, but you have to position the heads in this landing zone. To do this you should run a program designed to park the heads in this landing zone before removing power.

The thinner medium requires a smaller space on the disk to store data. Also the heads can fly closer to the disk, further reducing the space and magnetic field strength required to accurately store data and increase densities.

Read/Write Heads

The read/write heads used infixed disk systems are very similar to the read/write heads on the disk memory set. There is one head for each disk surface. These heads are joined to the head actuator and move in unison across the disk. There are currently two types of heads in use: the composite ferrite head and the thin film head.

COMPOSITE FERRITE HEAD. —The composite ferrite head is the traditional type of head used in magnetic recording. It consists of an iron oxide core wrapped with electromagnetic coils. To write data on the disk, an electric current is passed through the coils and a magnetic field is induced on the ferrous material of the disk surface. Changing the direction of current flow through the head's coil will result in a reversal of the magnetic field on the disk.

THIN FILM HEAD. —The thin film head is actually a specialized integrated circuit chip. The head has a precise U-shaped groove in its bottom to allow the right amount of air pressure for the head to fly at the proper height. This lightweight head flies closer to the disk than the composite ferrite heads.

A thin film head's flying height can be as little as 5 millionths of an inch above the disk. The closeness of the head to the platter increases the signal-to-noise ratio, which increases the accuracy of the disk system.

Head Actuator Systems

The mechanical system that moves the heads across the disk is known as the head actuator. These mechanisms have to be extremely precise to position the heads over the proper cylinder. The two types of head actuators are called stepper motor actuators and voice coil actuators.

STEPPER MOTOR SYSTEMS. —The stepper motors used in freed disk systems are very similar to the ones used in floppy disk systems. The stepper motor is generally located outside of the HDA, with just the shaft of the motor penetrating the HDA. Attached to the shaft is a steel band. The other end of this band is attached to the head/arm assemblies. As the motor moves through its detents, the band will wind or unwind around the shaft and move the heads.

A stepper motor in a fixed drive system has two major disadvantages. It is temperature sensitive and the band can stretch over time. Ambient air temperature can cause minute changes in the size of the disk and stepper band. Since the tracks on a fixed disk can be l/1000th of an inch, these size changes can be significant enough to cause a loss of data. Anew drive should be allowed to reach operating temperature before it is formatted. This will ensure that the data will be centered on the tracks unless there is a drastic change in temperature.

The band that connects the head/arm assembly with the stepper motor shaft is made of steel and can stretch over time. Again this will cause the heads to be misaligned with the tracks. A good safeguard against losing data to this problem is for you to backup the data and do a low-level format once a year.

VOICE COIL HEAD ACTUATOR. —A voice coil head actuator works in the same way that an audio speaker does. An electromagnetic coil is connected to the head/arm assembly. As current is applied to the coil, it moves along a track and moves the heads. Movement of the heads in a voice coil actuator is very smooth, but the heads need a signal to tell them when to stop at the right track. One side of one of the disk platters can be dedicated to head positioning by having servo tracks permanently written on it. The heads are then positioned in a manner similar to the disk memory set. Another method of head positioning used in voice coil actuators is to embed the servo signals in the sector gaps of the data tracks. This eliminates the need for a dedicated surface.

Voice coil actuators have several advantages over the stepper motor actuators. Since the heads are positioned in relationship to the control signal on the disk, they are not temperature sensitive. The heads of a voice coil actuator are self-parking. When power is removed from the drive, the electromagnetic field that positions the heads collapses causing the heads to retract to the park position.

Spindle Motor

The spindle motor actually spins the disks. A direct drive system is used in all fixed disk drives. Originally, 3,600 rpm was the standard speed used by almost all fixed disk systems. Today, the speeds range from 3,600 rpm to 7,200. The spindle motor is controlled by a tachometer and feedback loop that monitor and adjust the speed of the motor.

Logic Boards

All fixed disk drives have at least one logic board. Logic boards provide power to the motors and actuator, and monitor the speed of the disk. They also perform data conversions to a form usable by the controller.

DATA ENCODING METHODS

Data is stored on the disk by changing the direction of the magnetic field or flux reversals. The flux reversals generate pulses when being read from the disk. Flux reversals are sensed as a positive to negative or negative to positive pulse. In storing data in nonreturn to zero format, a flux reversal would indicate a logic ONE and no flux reversal would indicate a logic ZERO. When reading data from a disk drive, the drive and the disk controller must be synchronized for proper operation. The disk controller uses the flux reversal pulses as timing and synchronization signals in addition to data. Therefore, if a long string of zeros are being read from the disk, the possibility exists that the controller could “get lost” because of a lack of pulses. To prevent a loss of synchronization, several methods of encoding data have been developed. These are as follows:

- Frequency modulation (FM)
- Modified frequency modulation (MFM)
- Run length limited (RLL)

Frequency Modulation (FM)

Frequency modulation (FM) is the simplest method of encoding data to include enough timing pulses so that the controller and disk drive remain synchronized. Using FM, each data bit is split into two clock periods. A logic ONE is encoded as two pulses or flux reversals. A logic ZERO is encoded as a pulse followed by no pulse. Therefore the byte 11000101 would be encoded on the disk as PPPPPNPNPNPPPNPP (P = pulse, N = no pulse).

FM is an effective method for encoding data, but it wastes a lot of space on the disk. To maximim data storage on the disk, a method is needed that reduces the number of pulses yet does not allow too many no pulse time periods.

Modified Frequency Modulation (MFM)

Modified frequency modulation (MFM) refines data encoding to reduce the number of pulses written on the disk. Using MFM, a logic ONE is always encoded as no pulse followed by a pulse. A logic ZERO, when preceded by a logic ONE, is encoded as two no pulses. A logic ZERO, when preceded by another logic ZERO, is encoded as a pulse followed by no pulse. Using MFM, the byte 11000101 would be encoded NPNPNNPNPNNPNNNP for a total of six pulses or flux reversals on the disk. Compare this with the 12 pulses required to store the same data using FM.

MFM is currently used with all floppy drives, most large disk memory sets, and many fixed disk systems.

Run Length Limited (RLL)

The run length limited encoding schemes take data encoding to a new level. Usually the RLL specification will be followed by two numbers such as 1, 7 or 2, 7. These numbers represent the minimum and maximum run of O bits between two 1s. The most common RLL scheme is RLL 2,7.

RLL 2,7 is a complex encoding scheme that groups bits together and uses a table to encode the data in these groups. for example, 1100 is encoded as NNNNPNNN, 1101 is NNPNNPNN, and 111 is NNNPNN.

RLL increases the density and transfer rate of data by 50 percent. A 20M MFM drive can store 30M if formatted as an RLL drive. Whether a drive is MFM or RLL depends on the controller and not the drive.

FIXED DISK CONTROLLERS

The disk controller determines what encoding scheme will be used and interfaces the disk with the computer. You can change the disk controller to make a 20M drive into a 30M drive by changing from an MFM controller to an RLL controller.

RLL encoding requires that the drive work harder; therefore, be sure your drive can handle the demands of a new controller. Of particular concern is the type of head actuator and the magnetic medium of the drive. Stepper motor head actuators are slower and the problems they can encounter with temperature can cause the drive to be very unreliable if formatted as an RLL drive. Iron oxide medium has a lower signal-to-noise ratio than the thin film medium. The noise picked up by the heads can be interpreted as data and result in read errors.

FIXED DISK INTERLEAVE FACTOR

The interleave factor is a method of numbering the sectors on a fixed disk to provide the optimal transfer of data between the controller and the computer. When a freed disk is formatted, sector numbers are written on each track. Interleaving refers to the relationship between the physical sectors on a track and the logical sectors on a track. Each sector on a fixed disk in a personal computer has 512 bytes per sector. Most files are larger than 512 bytes; therefore, it is assumed that if you want to retrieve the data at cylinder 225, sector 1, you will next need the data in sector 2. Since the fixed disk spins at 60 revolutions per second, the heads read data at 512 bytes per sector, 17 sectors per track or a data rate of over 500 kilobytes per second.

With no interleave factor, the head reads the data from sector 1 and sends it to the controller. While the controller assembles the data to send it to the computer, sector 2 is under the head but the controller is not ready to accept the data. So the disk must make another revolution to retrieve the data from sector 2. To avoid this problem, the disk is interleaved. This means the logical sector numbers do not necessarily follow the physical sectors.

Figure 10-19 illustrates the sector numbering of a disk with a 3:1 interleave. Physically the sectors are numbered 1, 7, 13, 2, 8, 14, 3, 9, 15, 4, 10, 16. . .12, and back to 1. With a 3:1 interleave, the head reads logical sector 1 and sends the data to the controller. While the controller processes the data, the next physical sector and part of the following sector pass by

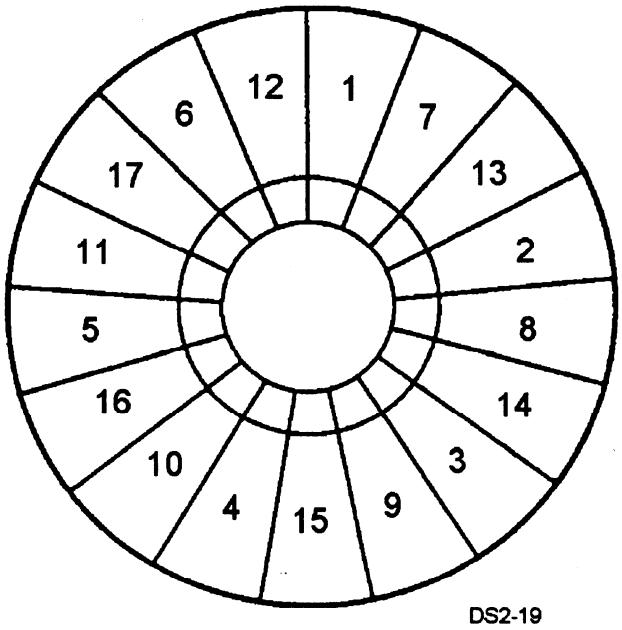

Figure 10-19.—A 3:1 disk interleave.

the head. When the controller is ready for the data from sector 2, the disk is approaching logical sector 2. In this way, interleaving speeds up data retrieval and transfer. Today many fixed disk controllers are fast enough to handle a 1:1 interleave.

FIXED DISK INTERFACES

The last area of a fixed disk system is the type of interface used to transfer data between the computer and the disk. Several drive interfaces are in use today:

- ST-506/412
- IDE
- EIDE
- ESDI
- SCSI

ST-506/412 Interface

The ST-506/412 Interface was one of the first fixed drive interfaces designed and became a standard for many fixed disk systems. It was originally designed for a 5M drive. As manufacturers improved the performance of their drives, a need developed to tell the computer about the characteristics of the drive as far as how many disks and heads are in the drive. This was accomplished by installing a drive table in the computer's BIOS ROM, and then having the technician tell the computer what freed disk system was being used by running the set-up program. The original ST-506/412 specification dictated that modified frequency modulation be used as the encoding scheme, but lately the interface has been upgraded to include RLL 2, 7. The ST-506/412 interface also requires the data encoder/decoder be on the disk controller. This means that raw data is transferred from the disk to the controller over the data cables. To reduce the possibility of data loss during this transfer, fixed disk data cables are kept as short as possible.

Enhanced Small Device Interface (ESDI)

The Enhanced Small Device Interface (ESDI) is a high performance, high-speed interface and controller. ESDI controllers increase reliability by putting the data encoder/decoder circuitry on the drive logic board. This eliminates the data errors caused by noise and signal loss in the cables. ESDI is capable of transferring data at a rate of 24 megabits per second. Most ESDI drives today are limited to 10 or 15 megabits per second due to limitations of the host computer's I/O bus.

ESDI drives are capable of being formatted to 60 sectors per track or higher, although 32 sectors per track is most common. All ESDI controllers can support a 1:1 interleave.

One of the most important features of ESDI systems is that the controller can read the drive parameters directly off the disk. With this capability, the controller can tell the BIOS the type of drive installed. This eliminates the need for the user to run the setup program. Also, this feature allows for defect mapping, further improving the drive's reliability.

Integrated Drive Electronics (IDE)

The Integrated Drive Electronics (IDE) interface was originally developed as an interface for hard cards. A hard card is a small drive mounted on a controller board which plugs directly into the personal computer's expansion slot. IDE has been expanded to include 5.25-inch and 3.5-inch fixed disk systems. IDE drives connect to the motherboard of the host computer with a 40-pin connector.

IDE drives have much of the controller and interface circuitry on the drive logic card. Recently, computer manufacturers introduced motherboards with IDE controllers and interfaces.

One major drawback of IDE drives is that you can damage the drive if you try to perform a low-level format on the drive.

Enhanced Integrated Drive Electronics (EIDE)

The EIDE interface was developed to overcome many of the limitations of the IDE interface. As we saw in chapter 7, EIDE provides the capability for addressing fixed disks with over 540 MB of storage capacity. EIDE also provides faster data transfers and the ability to use a CD-ROM drive in an EIDE system.

Small Computer Systems Interface (SCSI)

The Small Computer Systems Interface (SCSI) is really a systems level interface, not just a disk interface. SCSI (pronounnced *scuzzy)* uses a host adapter that plugs into the computer. The SCSI has eight I/O ports. One is dedicated as the interface between the host computer and the adapter. The other seven ports are available for other device controllers, such as disk drives, CD-ROM readers, and digital scanners.

The SCSI is a *smart interface.* When the host computer requests data from a device connected to the SCSI, the SCSI will disconnect itself to free up the computer while it processes the request. The SCSI is capable of transferring data at up 100 megabits per second.

FORMATTING FIXED DISKS

Fixed disk systems operate in much the same manner as the floppy disks and the disk memory set. Before anew fixed disk drive can be used in a personal computer, it must be formatted. The formatting of a fixed disk is performed by two or three separate operations. These are as follows:

- Low-level format
- Creating a DOS partition
- High-level format

Low-Level Format

The low-level format program writes the tracks and sectors on the disk. Low-level format programs vary according to the type of drive and controller. Many controller manufacturers now include the low-level format program in a ROM on the controller. You can access this program by using the DOS DEBUG routine. Refer to the controller's documentation to find the starting address for the format program.

When you install and format a new freed disk drive, it is extremely important to enter the defective tracks from the list supplied by the manufacturer. These bad tracks are usually listed on a label on the drive, with another hard copy supplied with the documentation.

When the low-level format program is executed, it will mark any bad tracks with a checksum error that will prevent these tracks from being used for data storage. In addition, the low-level format program will check all areas of the disk to see if any additional bad tracks are detected. If you are formatting a new disk, only the tracks on the manufacturer's list should be bad. If you are reformatting an older disk and find that additional tracks are listed as bad, the disk is showing signs of severe damage and should be replaced.

CAUTION

DO NOT run a low-level format program on an IDE drive. Serious damage could result by trying to low-level format this type of drive.

There are two additional terms you need to be familiar with to low-level format or troubleshoot fixed disks. These are *write precompensation* and *reduced write current.* Write precompensation and reduced write current are also used in some disk memory sets.

Write Precompensation —Write precompensation is used to prevent problems that can occur when data is written on the higher numbered cylinders. A disk is divided into sectors and tracks. Each sector can store 512 bytes of data. The sectors on the outside of the disk surface are physically larger than the ones on the inside of the disk. As data is recorded on the disk, like poles of magnetic fields are repelled away from each other and opposite poles are attracted to each other. As the heads move toward the center of the disk, the write precompensation circuitry changes the spacing of the magnetic fields. after the natural attraction or repelling of the magnetic domains is complete, the magnetic fields are in the proper place.

Reduced Write Current —Reduced write current also compensates for problems that can arise when writing on the inner tracks of a disk. As the system writes on the inner tracks of the disk, less current is required because the data is more densely packed. Using the same current on the inner tracks that is required on the outer tracks would cause the data to run over each other.

Manufacturers' data sheets included with new drives will indicate what cylinder write precompensation and reduced write current are

invoked. You will need this information when you low level format some fixed disk drives. If the write precompensation value. is the same as the highest numbered cylinder on the disk, it means that the disk does not require write precompensation.

Creating a DOS Partition

Upon completion of the low-level format, a fixed disk to be used in a personal computer needs to be partitioned. To partition a disk, run the DOS FDISK program. Partitioning a fixed disk divides the disk into one or more logical drives. The drive must be partitioned even if the entire drive will be one large partition. DOS 3.3 allows a maximum partition of 32M. DOS versions 4.0 and greater allow DOS partitions of up to 4 gigabytes. If you have a drive larger than 32M, and are using DOS 3.3, you can divide the disk into two logical drives to fully use the disk. Refer to the primary partition as drive C and the extended partition as drive D.

Running FDISK on the disk prepares the DOS boot sector so the high-level 'format program will operate correctly.

Partitioning will also allow you to have two different operating systems on the same disk. The primary partition will have DOS, where the extended partition can be set-up to run with OS/2, UNIX, or some other operating system.

High-Level Format

The last step in preparing a fixed disk for use in a personal computer is to run the DOS high-level format program. This program creates the FAT and an empty root directory so DOS can manage files. If the drive is to be used to boot the computer, this format will also write the two hidden system files and the COMMAND.COM file. Use the command FORMAT C: /S to create a bootable disk. If the disk is to be used for data storage only, do not be use the/S switch.

RECOVERING DATA FROM FIXED DISK DRIVES

Loss of data on a fixed disk drive can result from several causes. These range from accidental erasure to infection by a computer virus to actual hardware failure. When disaster does strike, the main objective is to recover as much data as possible from the disk.

Recovering Data From an Erased File

There are many ways that a file can be accidentally erased. The important thing in recovering an erased file is detecting the error quickly. DOS does not actually erase the data areas of a file when you delete it, DOS merely changes the code in the FAT to indicate that the cluster is available for use. Therefore, to completely recover an erased file, you must try the recovery before DOS reuses the clusters that the file was in.

You can manually recover an erased file by using the DEBUG program in DOS. This method is long and tedious. Several commercial programs are available that will try to restore an erased file. These programs will look at the deleted directory entry to find where the starting cluster of the file was, then check the size of the file to determine how many clusters the file should have occupied. The recovery program will then check the FAT and see if the clusters are available. For example, if a file occupied clusters 75 to 79, a check of the directory entry would show that the beginning of the file was cluster 75. The program would then try to recover all the data in clusters 75 to 79. The problem arises if the file was fragmented. That is, the file was in clusters 75, 83, 100, and 101. In many cases when the file is fragmented, it cannot be recovered.

To avoid file fragmentation, there are also several file unfragmenter programs for use in personal computers. These programs will check the disk for fragmented files, and rewrite the fragmented files so they are contiguous.

Computer Viruses

A computer virus is any program designed to be willfully destructive. A virus can be spread by several methods. The methods include loading the virus from a bulletin board system and loading a virus onto your fixed disk from a floppy disk.

When the word of a virus infection is spread, the first reaction of many users is to panic. Knowing how a virus is spread can help you find the source of the virus. In IBM personal computer systems and compatible systems, a virus can only be spread in .COM and .EXE files. Some viruses maybe harmless pranks, such as displaying a message on the screen every time the virus is activated. Others are much more harmful and may format your freed disk or they may erase the FAT or master boot record (MBR).

The three common types of viruses are the worm, the Trojan horse, and the logic bomb.

Worm Virus —A worm virus is a program that copies itself endlessly, tying up computer time and eventually overloading the disk. Worms can also spread copies of themselves over networks and disrupt the network by overloading all the computers on the network.

Trojan Horse Virus —A Trojan horse virus is a program that embeds itself into other programs. When an infected program is run, the virus further infects other programs or causes damage to your system. Trojan horses can contain worms or logic bombs. Once active, the Trojan horse worm component will seek out other programs to infect. Trojan horses are commonly used as an initial source of infection.

Logic Bomb Virus —A logic bomb is a virus that is embedded in a program or operating system that waits for an event to occur. The logic bomb is activated by a date, a time, or by some other parameter. When the conditions of the logic bomb are met, the bomb is activated. Logic bombs can reside undetected in a personal computer for long periods of time, waiting for the proper conditions to set it off. Logic bombs are traditionally the most destructive of all viruses.

PREVENTING VIRUS INFECTIONS. —Virus infections can be prevented with a little caution and common sense. Viruses reside in the disk's boot records or in .COM or .EXE files. Your system cannot be infected by data files. Further precautions you can use to prevent viral attacks include:

- **Never use pirated software.** Most virus attacks occur as a result of people using pirated software. Note: Pirated software is very common in the Far East, where it is sold complete with pirated manuals and documentation.

- **Make regular backups.** Backups may be needed to restore data files in the event of a virus infection. Be sure to maintain several copies of your backups. A good plan is to have one backup that is a week old and one that is a month old. If a virus does infect your personal computer, these backups can help you discover when the infection happened and you can restore some data without reintroducing the virus.

- **Report all virus infections to the command's ADP Security Officer.** The Navy is tracking all virus infections in an attempt to discover the source of each infection.

- **Use only authorized software on personal computers.** Do not bring software from home or copy it from other systems.

- **Periodically check for virus infections.** One simple way to check for virus activity is to keep an eye on the COMMAND.COM file in DOS. Copy the original COMMAND.COM file under a new name that does not contain a .COM or .EXE extension. Periodically compare the size of this new file with the COMMAND.COM file. If the COMMAND.COM file has gotten larger, something caused it to grow. Suspect a virus.

REMOVING VIRUS INFECTIONS. —If a virus does infect your system, there are several ways to remove it. The longest and most tedious is to low-level format your freed disk and restore all your files from your backups. Another method is to use one of the several commercial virus detection and removal programs on the market today. These programs, when used properly, can detect and remove viruses before they have done permanent damage to your system.

Recovering Data After a Hardware Failure

You come to work in the morning and find that your personal computer is dead. You haven't made backups of your data in the last year. Don't panic, even after a severe head crash some data can usually be recovered from a fixed disk drive. Your main priority should be to get as much data off the disk as possible, but first you need to get it running. To do this, the first step is to determine exactly what is wrong with the drive.

- Check the computer's setup and ensure that the information about the drive is still there. The setup is stored in the computer. A battery provides power to keep this information in the computer. If the battery dies, when the computer tries to boot from the hard drive, it won't find the hard drive if the setup is gone.

- Check the temperature of the computer and the drive. Some drives will not work if they are too hot or too cold.

- Check the drive's cables and connectors. Are the connectors on tightly? Connectors can work themselves loose, or they may not have been tightly installed. If you have an extra set of cables, try replacing them. A pinched cable can breakdown from stress in time.

- Does the disk spin? If not, make the following checks. (1) Check the power supply to see if all the proper voltages are present. (2) Check for stiction; it is another cause of the failure of the disk to spin properly. Stiction can result from the lubricant on the disk getting too hot. The heat softens the lubricant. When the drive

is turned off, the lubricant hardens as it cools causing the heads to stick to the disk. The heads will prevent the disk from spinning. To solve this problem, remove the drive and try to free the disk by manually turning the spindle motor shaft. You may have to remove the drive's logic board to gain access to the spindle motor. Once free, the drive will probably operate normally. (3) If your drive has a stepper motor head actuator, check to see if it is operating properly. A stepper motor can develop dead spots or become stuck. Try to move the stepper motor manually if it is not operating properly. This will move it off the dead spot and the drive may operate long enough for you to recover the data you need.

- Finally, check the controller. If you have an identical controller, try installing it in the computer and see if this will solve your drive problems. If you don't have a spare controller, try reseating the chips on the controller board.

FIXED DISK CARE AND HANDLING

Fixed disks require very little care and handling precautions. Since the head/drive assembly is a sealed assembly, you can't very easily fix it, so you might as well take care of it. The following tips are designed to help you keep a fixed disk in good condition:

- Limit the number of times you turn the machine on and off. The power surge from turning on a disk drive can exceed 400 watts. If the heads were not parked, this start-up power surge going through the heads could damage data on the disk.

- Protect your system from bad power. A good surge protector, power conditioner, or uninterruptible power supply can protect your entire system from being destroyed by a power surge or blackout. If you are using a surge protector, be sure it is one that has been accepted by the Navy for use with personal computers.

- Mount fixed disk drives using the manufacturer's instructions and hardware.

- Low-level format a fixed disk drive in the position and at the temperature that it will be used. Most fixed disk drives will work fine if the computer is stored on its side, but the fixed disk must be formatted in this position to avoid track alignment problems.

- Park the heads. This is extremely important to do every time you shut the power off if your disk has a stepper motor head actuator. Voice coil head actuators are self-parking when power is turned off. Parking the heads moves them to a safe landing zone so they do not damage the disk.

CAUTION

Certain IDE drives may be damaged by trying to park the heads. Refer to the manufacturer's instruction on head parking.

- Keep the area around a fixed disk system clean. Avoid eating, drinking, and smoking around fixed disks.

SUMMARY—MAGNETIC DISK STORAGE

This chapter has introduced you to the major types of magnetic disk storage devices. The following information summarizes important points you should have learned:

TYPES OF DISKS —Disks are classified as floppy disks or hard disks. Hard disks are furthered classified as disk memory sets that have removable disk packs or fixed disk systems. Infixed disk systems, the disk pack is in a sealed head/drive assembly and is not accessible to the user.

ORGANIZING DATA ON DISKS —Data is stored on disks by dividing the disk into tracks, cylinders, and sectors. A track is a concentric ring on the disk. A cylinder consists of all vertical tracks. A sector is apart of a track. Before a disk can be used, it must be formatted. Formatting is the process of writing the tracks and sectors on each recording surface of a disk or disk pack. On disk systems used in personal computers, program and data files are stored in directories and subdirectories.

FLOPPY DISKS AND DISK DRIVES—Floppy disk drives are the simplest of all magnetic disk storage devices. Two sizes are commonly used today: 5.25 inch and 3.5 inch. Floppy disks come indifferent densities.

THE 5.25-INCH FLOPPY DISK CONSTRUCTION—The 5.25-inch floppy disk consists of a flexible magnetic disk contained in a disk jacket. The jacket has several standardized cutouts. The media access hole provides for the heads to access the disk. The index hole indicates the start of the track. The write enable notch can prevent the disk from being written on if it is covered with a strip of tape. The stress relief notches help to properly position the disk in the drive and prevent the disk from warping while in the drive.

THE 3.5-INCH FLOPPY DISK CONSTRUCTION —The 3.5-inch floppy disk is in a hard plastic case. The media access hole is covered by a metal spring loaded shutter. Write protection is provided by a slide switch on the bottom of the case. High density, 3.5-inch floppy disks have a media indicator hole in the disk. A disk without this hole cannot be formatted as a high density disk.

FLOPPY DISK DRIVE OPERATION —Several components are common to all floppy disk drives. The spindle assembly/drive motor turns the disk at the proper speed. The drive circuit board controls the reading and writing of data on the disk. Connectors and cables connect the disk drive to the disk controller. The read/write heads actually read data from a disk and write data on a disk.

DENSITY AND COERCIVITY —Density is the term that describes how much data can be stored on a disk. Coercivity is how much magnetic force, measured in oersteds, is required to properly write data on a disk. The density and coercivity of a disk is directly related to the magnetic media of the disk.

USING LOW-DENSITY DISKS IN HIGH-DENSITY DRIVES —Avoid using low-density disks in high-density drives, especially in 5.25-inch drives. This is because of the difference in the size of the tracks that high-density drives use. Never format a low-density 5.25-inch disk as a high-density disk. The 3.5-inch disk drives do not have these problems because the media indicator hole in the disk case prevents using a low-density disk in a high-density format.

FLOPPY DISK DRIVE INSTALLATION AND CONFIGURATION—When installing a floppy disk, you have to determine how the disk is to be configured. You have to set the drive select jumper. Drive selection is also dependent on the type of drive-to-controller cable used. You must also determine the correct setting for the terminating resistor, the diskette change line/ready jumper, and the media sensor jumper.

FLOPPY DISK CARE AND HANDLING — Taking care of floppy disks will improve the reliability of the data stored on the disk. It is important to be aware of all potential sources of stray magnetic fields when storing your disks.

DISK MEMORY SET —The disk memory set is also commonly referred to as a disk file unit or mass memory storage unit. These devices have large removable disk packs and are mainly for use with mainframe computers.

MAGNETIC DISK PACKS —Magnetic disk packs are hard platters coated with a magnetic oxide. They range is size from just 1 disk to over 14 disks. Many disk packs have a servo surface that contains permanently recorded data used for positioning the heads.

DISK FILE UNIT CONTROLS AND INDICATORS (DISK UNIT) —The disk memory set's controls and indicators allow the operator and technician to set operating modes and monitor the operation of the disk memory set.

DISK MEMORY SET CONTROLLER —The disk memory set's controller manages the operation of the disk memory set. It has six main functional areas: the controller intercommunications bus, microprocessor, buffer memory, controller to disk drive interface, the data bus control unit, and the CDS channel interface.

DISK DRIVE UNIT —The disk drive unit controls the rotation of the disk pack, the positioning of the read/write heads, and the reading and writing of data on the disk.

DISK MEMORY SET OPERATIONS —Disk memory set operations include disk formatting, write operations, and read operations.

CARE AND HANDLING OF MAGNETIC DISK PACKS —Properly taking care of the disk packs can prevent major head crashes and data loss.

FIXED HARD DISK SYSTEMS —Fixed hard disk systems are also commonly referred to as hard disks. They are common in minicomputers and personal computers.

FIXED HARD DISK DRIVE CONSTRUCTION —Fixed hard drives consist of one or more disk platters in a sealed head/drive assembly (HDA). The HDA also contains the read/write heads and the head actuator assembly. The head actuator assembly can be a stepper motor or voice coil. It controls the movement of the heads. The spindle motor is mounted outside of the HDA. The spindle motor shaft penetrates the HDA and turns the disk. The logic board of a fixed disk drive controls the position of the heads and read/write operations.

DATA ENCODING METHODS —Methods for encoding data on disks were developed to increase data reliability and keep the controller synchronized with the drive. The two most common encoding methods in use are modified frequency modulation (MFM) and run length limited (RLL).

FIXED DISK CONTROLLERS —Fixed disk controllers control the disk drive. The controller can determine what encoding method is used, what the interleave factor of the disk is, and what interface is used to communicate with the host computer. It is very important that the disk drive and controller are compatible with each other. Some disk controllers are located on the drive logic boards, while other disk controllers are on a separate circuit board with the interface.

FIXED DISK INTERLEAVE FACTOR — Interleaving is a method for logically numbering sectors to allow time for the controller to process data. The fastest drive/controller combinations can support a 1:1 interleave.

FIXED DISK INTERFACES —Fixed disk interfaces determine how the disk controller communicates with the host computer. In some cases the disk controller is on the same circuit board as the intcrface. The most common interfaces in use are the ST-506/412, the Integrated Drive Electronics (IDE) Interface, the Enhanced Small Device Interface (ESDI), and the Small Computer Systems Interface (SCSI).

FORMATTING FIXED DISKS —Before a fixed disk can be used in a personal computer, it must be formatted. Total formatting consists of a low-level format, making a disk partition, and a high-level format.

RECOVERING DATA FROM FIXED DISK DRIVES —Most of the time data can be recovered from a fixed disk. Accidentally erased files can be recovered. If your computer is infected by a virus, it is sometimes possible to recover files and get rid of the virus. Broken drives can be revived long enough to get important files off them. The best protection from data loss is regular and complete backups of your data files.