CHAPTER 1

SURFACE NAVIGATION SYSTEMS

INTRODUCTION

Today's Navy uses various navigational systems in the fleet. As an ET, you will be responsible for maintaining these systems.

In this volume, we will cover navigation fundamentals, the Ship's Inertial Navigation System, Navy Satellite Navigation System, NAVSTAR Global Positioning System, fathometers, and TACAN. Let's start with navigation fundamentals.

NAVIGATION FUNDAMENTALS

In simple terms, navigation is a method of getting from one known point to some distant point. Piloting, celestial navigation, and radio navigation are the commonly used methods. In this chapter, we will discuss radio navigation and its components: dead reckoning, electronic navigation, and tactical navigation. The tactical use of NTDS data (tactical navigation) was covered in volume 3, *Communications Systems.* However, we will review it briefly here to help you see how it fits into radio navigation. We will then discuss dead reckoning and electronic navigation in more detail.

TACTICAL NAVIGATION

You must understand the difference between navigation in the traditional sense and tactical navigation. Traditional navigation and piloting are concerned primarily with safe maneuvering of the ship with respect to hazards such as shoals, reefs, and so forth. Tactical navigation is not directly concerned wit h maneuvering the ship in navigable waters. For the purposes of tactical navigation, absolute position is unimportant except to the extent that it supports determining the relative position of hostile targets and friendly cooperating platforms.

Remember, tactical navigation deals primarily with fixing the location of the platform to (1) enable installed weapon systems to function against intended targets, (2) prevent ownship loss to or interference with friendly weapon systems, and (3) coordinate ownship weapons systems with those of other platforms to achieve maximum effect.

In tactical navigation, navigation data is used by combat systems, including NTDS, to ensure accuracy in target tracking. Ship's movements are automatically recorded by computer programs for applications such as gun laying calculations and Link 11 position reporting. Ship's attitudes (pitch, roll, and heading) are transmitted to various display and user points, and electronic or mathematical computer stabilization is accomplished, depending on the system. For example, pitch and roll are used by NTDS, missile, sonar, gun, and TACAN systems for stabilization data and reference. Heading is used by the EW direction finding, sonar, and radar systems for true and relative bearing display. Ship's navigation and attitude data are provided by various equipment, depending on ship class.

DEAD RECKONING

Dead reckoning is the estimating of the ship's position between known navigational points or fixes. Radio navigation, consisting of terrestrial systems such as OMEGA and LORAN, and space-based systems, such as SATNAV, TRANSIT, and NAVSTAR GPS, provides accurate positions at specific fixes. However, with the exception of some gunfire support systems that provide nearly constant positional updates with respect to a fixed beacon or prominent landmark, there is a limit to how often fixes can be obtained. This requires us to dead reckon (DR) between the fixes. Dead reckoning can be as basic as a DR line for course and speed on a plotting sheet or as sophisticated as an estimate made by an

inertial navigation system that measures the ship's motion in several planes and integrates the results with a high degree of accuracy. Although the methods of dead reckoning may vary, they all share the following characteristics: (1) the accuracy of the estimated position never exceeds the navigation method used to obtain the last fix, and (2) the accuracy of the estimated position deteriorates over time.

ELECTRONIC NAVIGATION

Simply put, electronic navigation is a form of piloting. Piloting is the branch of navigation in which a ship's position is determined by referring to landmarks with known positions on the earth. These reference points may be bearing and distance to a single object, cross bearings on two or more objects, or two bearings on the same object with a time interval in between.

Position in electronic navigation is determined in practically the same way as piloting, though there is one important difference—the landmarks from which the ship's position is determined do not have to be visible from the ship. Instead, their bearings and ranges are obtained by electronic means.

The advantages of electronic navigation are obvious. A ship's position maybe fixed electronically in fog or heavy weather that makes it impossible to take visual fixes. Also, an electronic fix can be based on stations far beyond the range of any local bad weather.

Since electronic navigation is the primary form of navigation in today's Navy, the rest of this chapter will deal with electronic navigation and the roles played by the following systems:

1. Long Range Aid to Navigation **(LORAN)**
2. VLF Radio Navigation **(OMEGA)**
3. Ship's Inertial Navigation System **(SINS)**
4. Navy Navigation Satellite System **(NNSS)**
5. NAVSTAR Global Positioning System **(GPS)**

We will also briefly discuss navigation radar, surface search radar, and fathometers.

We will cover TACAN in chapter 2.

LORAN/OMEGA—TRANSITION AND BASIC OPERATION

LORAN and OMEGA have been the "workhorse" systems for many years. However, they are being phased out. Based on the DOD policy statement reprinted below and because you may see a civilian version aboard your ship from time to time, we will simply give you an overview of the two systems. *In accordance with the 1992 Federal Radio navigation Plan (FRP), NAVSTAR will become the primary reference navigation system for surface ships, submarines, and aircraft. The DOD requirement for LORAN-C and OMEGA will end 31 December 1994 and TRANSIT will be terminated in DECEMBER 1996. Land-based TACAN and VOR/DME are to be phased out by the year 2000.*

LORAN BASICS

LORAN is a long-distance radio navigation system used by ships at sea to obtain a position fix, The system is based on the difference in the transit time required for pulsed radio signals to arrive at the LORAN receiver from multiple, synchronized, omnidirectional ashore transmitters. LORAN also takes advantage of the constant velocity of radio signals to use the time lapse between the arrival of two signals to measure the differences in distance from the transmitting stations to the point of reception. The receiving set provides a direct reading, in microseconds, of the time difference in the arrival of the signals. (Some sets automatically convert the readings into latitude and longitude.) When the time difference is measured between signals received from any two LORAN transmitter stations, a ship's line-of-position (LOP) can be determined.

OMEGA BASICS

OMEGA is a hyperbolic phase-difference measurement system. Hyperbolic navigation involves comparing the phase angles of two or more radio signals that are synchronized to a common time base. By moving the OMEGA receiver (by ship's movement) and keeping the transmitter stations on frequency with a constant difference in time and phase, the system can measure the relative phase relationship between two stations to determine a line of position (LOP) for the ship. The relative phase angle measured between paired transmitting stations depends upon the distance of the receiver from each transmitter.

It is important to understand that a minimum of two transmitters are required to obtain a basic position fix. Three or four are necessary to obtain an accurate fix. Unfortunately, there are many times in which only two transmitters are available but three are desired. One way around this problem is to use the receiver oscillator as a third, or "phantom," transmitter. By setting the receiver oscillator to the frequency transmitted by each of the two OMEGA transmitters, the operator can compare the actual transmitted frequencies to the frequencies of the two received signals. This comparison provides two phase angles. The operator can then compare the two phase angles to determine a third phase angle. The three phase angles will yield a fix as accurate as a fix determined from three actual transmitters.

SHIP'S INERTIAL NAVIGATION SYSTEM

The Ship's Inertial Navigation System **(SINS)** is a navigation system that (after initial latitude, longitude, heading, and orientation conditions are set into the system) continuously computes the latitude and longitude of the ship by sensing acceleration. This is in contrast to OMEGA and LORAN, which fix the ship's position by measuring position relative to some known object. SINS is a highly accurate and sophisticated dead reckoning device. Let's look at some of the advantages of using the SINS.

ADVANTAGES

SINS has a major security advantage over other types of navigation systems because it is completely independent of celestial, sight, and radio navigation aids. In addition, SINS has the following advantages:

1. It is self-contained.
2. It requires minimal outside information.
3. It cannot be jammed.
4. It is not affected by adverse weather conditions.
5. It does not radiate energy.
6. It is not detectable by enemy sensors.

Now that we have seen the advantages of this system, let's look at its basic components.

BASIC COMPONENTS

Look at figure 1-1. The basic components of an inertial navigation system are accelerometers, gyroscopes, servo systems, and the computers (not shown). Accelerometers measure changes in speed or direction along the axis in which they lie. Their output is a voltage, or series of pulses (digital), proportional to whatever acceleration is experienced.

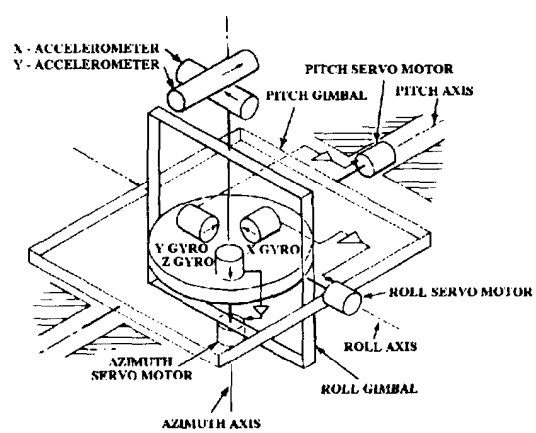

Figure 1-1.—Stable platform with inertial components.

Figure 1-2 shows an E-transformer accelerometer, while figure 1-3 shows a pulse counting accelerometer. Two accelerometers (orientated North-South and East-West, respectively) are mounted on a gyro-stabilized platform to keep them in a horizontal position despite changes in ship's movement. The accelerometers are attached to the platform by an equatorial mount (gimbal) whose vertical axis is misaligned parallel to the earth's polar axis. This permits the N-S accelerometer to be aligned along a longitude meridian and the E-W accelerometer to be aligned along a latitude meridian.

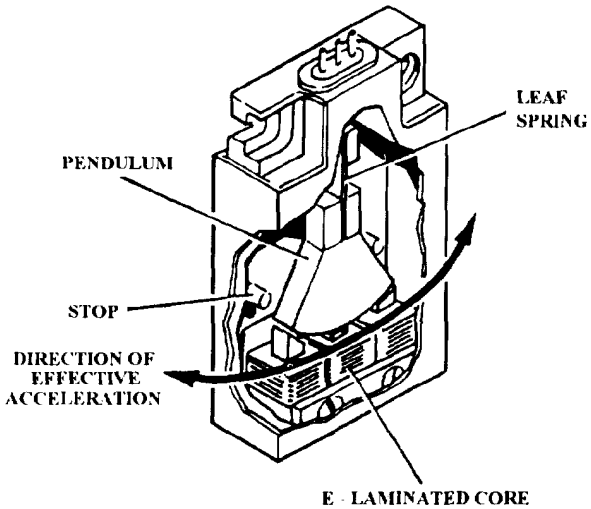

Figure 1-2.—E-transformer accelerometer.

A three-gyro stabilized platform is maintained in the horizontal position regardless of the pitch, roll, or yaw of the ship. Figure 1-4 shows a gimbal-mounted gyro. Ship's heading changes cause the gyro signals to operate servo system motors, which in turn keep the platform stabilized. High-performance servo systems keep the platform stabilized to the desired accuracy. (You will find in-depth information on accelerometers, gyros, and servo systems in NEETS Module 15, *Principles of Synchros, Servos, and Gyros.).*

Maintaining this accuracy over long periods of time requires that the system be updated periodically. This is done by resetting the system using information from some other navigation means; i.e., electronic, celestial, or dead reckoning.

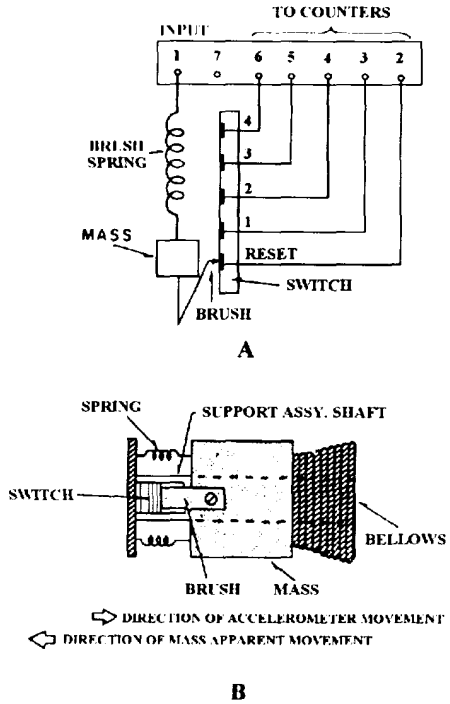

Figure 1-3.—Pulse counting accelerometer.

Several models of SINS are in use. In general, AN/WSN-2 systems are installed on auxiliary ships, AN/WSN-2A systems are installed on submarines, and AN/WSN-5 systems are installed or being installed on surface combatants. In the following paragraphs, you will be introduced to the AN/WSN-5 SINS and its advantages over these earlier systems.

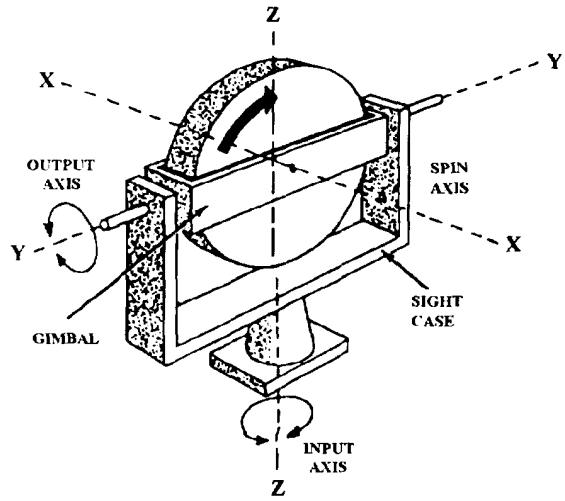

Figure 1-4.— Gimbal-mounted rate gyro.

AN/WSN-5 SINS

The AN/WSN-5 is a stand-alone set that replaces the MK 19 MOD 3 gyrocompass in the following class ships: CG 16, CG 26, CGN 9, CGN 25, CGN 35, CGN 36, CGN 38 (except for CGN 41), DDG 37, DD 963, and LHA 1. It also replaces the AN/WSN-2 stabilized gyrocompass set in DDG 993, DD 997, and CGN 41 class ships.

Functional Description

The AN/WSN-5 has the same output capabilities as the AN/WSN-2. It uses an accelerometer-controlled, three axis, gyro-stabilized platform to provide precise output of ship's heading, roll, and pitch data in analog, dual-speed synchro format to support ship's navigation and fire control systems. Ship's heading and attitude data are continually and automatically derived while the equipment senses and processes physical and electrical inputs of sensed motion (inertial), gravity, earth's rotation, and ship's speed. The equipment has an uninterruptible backup power supply for use during power losses, and built-in test equipment (BITE) to provide fault isolation to the module/assembly level.

Characteristics

In addition to the common functions described above, the AN/WSN-5 adds an increased level of performance to serve as an inertial navigator and provides additional analog and digital outputs. Additional data provided includes position, velocity, attitude, attitude rates, and time data in both serial and parallel digital formats, providing a variety of interfaces. The AN/WSN-5 commonly exists in a dual-system configuration on surface combatants. Some examples of AN/WSN-5 digital data outputs are:

1. Two Naval Tactical Data System (NTDS) serial channels transmitting:

- Ship's heading, roll, and pitch
- Ship's heading rate, roll rate, and pitch rate
- Ship's north, east, and vertical velocity components
- Ship's latitude, longitude, and GMT

2. Two MIL-STD-1397 NTDS type D high-level channels to an external computer

3. One MIL-STD-1397 NTDS type A slow, 16-bit, parallel input/output channel to a Navigation Satellite (NAVSAT) receiver AN/WRN-5A, Global Positioning System (GPS) receiver AN/WRN-6, or I/O console.

4. One serial AN/WSN-5 to AN/WSN-5 digital link that provides alignment data, Navigation Satellite (NAVSAT) fix data, calibration constant data, and other navigation data to the remote AN/WSN-5.

5, An additional variety of input/output NTDS channels, depending on which field changes are installed.

SATELLITE NAVIGATION SYSTEMS

Scientists realized that navigation based on satellite signals was possible after listening to the beep generated by Russia's first artificial satellite, Sputnik I. They noticed a shift in the received radio frequency signals as the satellite passed by. This shift, known as the Doppler effect, is an apparent change in a received frequency caused by relative motion between a transmitter and a receiver. As the distance between the transmitter and the receiver decreases, the received frequency appears to increase. As the distance increases, the received frequency appears to decrease.

With this discovery, scientists were able to show that by accurately measuring a satellite's Doppler shift pattern, they could determine the satellite's orbit. They then determined that by using a known satellite's orbit, a listener could determine his own position on the earth's surface by observing the satellite's Doppler pattern.

Following the first successful satellite launch in April 1960, the U.S. Navy Navigation Satellite

System (NNSS) became operational. This system is an all-weather, highly accurate navigation aid, enabling navigators to obtain accurate navigation fixes from the data collected during a single pass of an orbiting satellite.

The following paragraphs describe the NNSS, its satellites, Doppler principles, system accuracy , and two common shipboard equipments—the AN-WRN-5(V) and the AN/SRN-19(V)2.

NAVY NAVIGATION SATELLITE SYSTEM

This highly accurate, world-wide, all weather system enables navigators to obtain fixes approximately every 2 hours, day or night. Looking at figure 1-5, you can see that it consists of earth-orbiting satellites, tracking stations, injection stations, the U.S. Naval Observatory, a computing center, and shipboard navigation equipment.

System Satellites

Satellites are placed in a circular polar orbit, as illustrated in figure 1-6, at an altitude of 500 to 700 (nominally 600) nautical miles. Each satellite orbits in approximately 107 minutes, continually transmitting phase-modulated data every 2 minutes on two rf carriers. This data includes time synchronization signals, a 400-Hz tone, and fixed and variable parameters that describe the satellite's orbit.

The fixed parameters describe the nominal orbit of the satellite. Variable parameters (small corrections to the fixed parameters) are transmitted at two-minute intervals and describe the fine structure of the satellite orbit. The satellite memory stores sufficient variable parameters to provide the two-minute orbit corrections for 16 hours following injection of fresh data into the memory. Since data injections occur about every 12 hours, the satellite memory will not

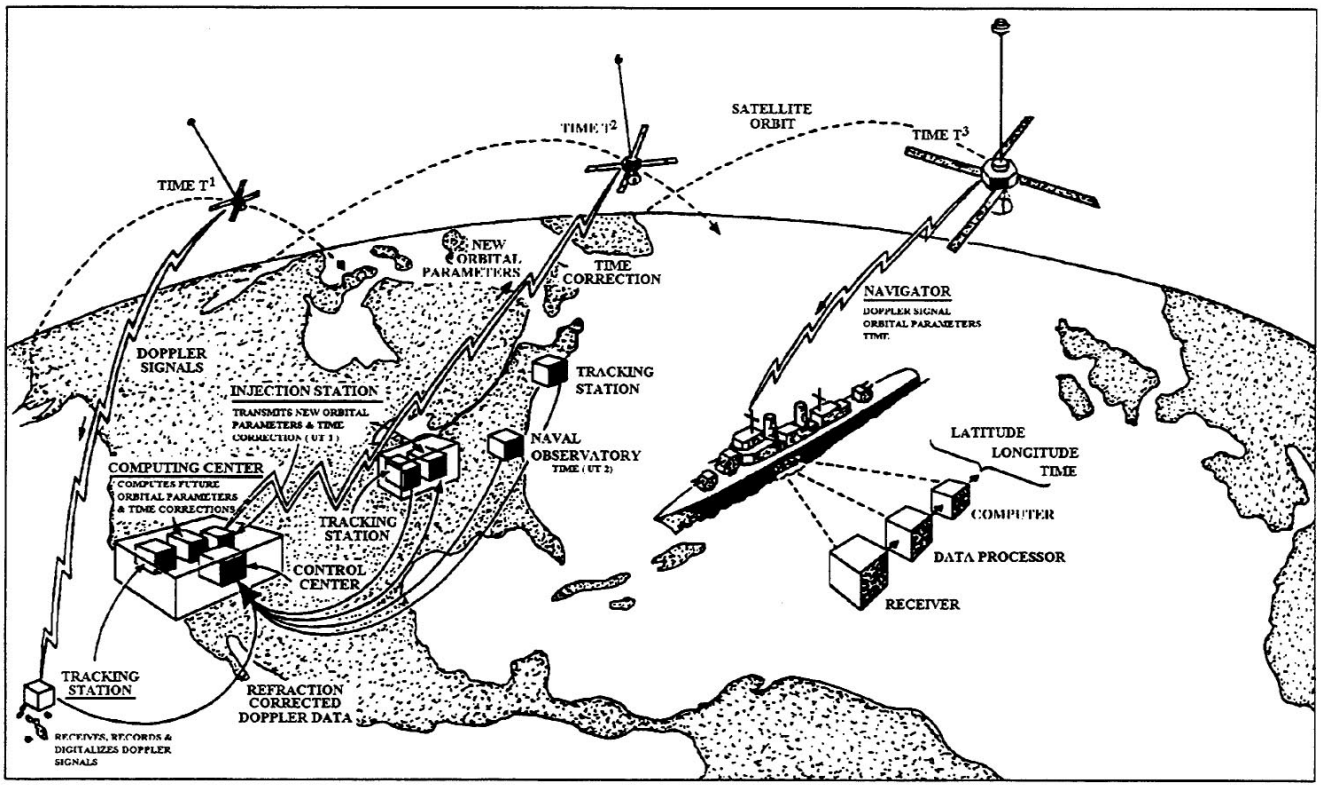

Figure 1-5.—Navy Navigation Satellite System.

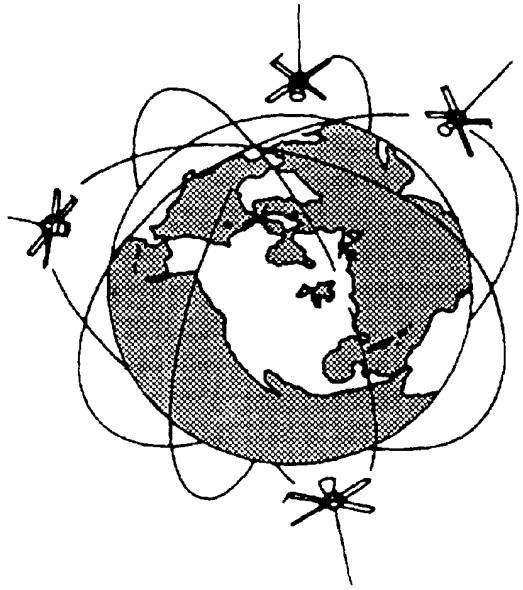

Figure 1-6.—Satellite orbits.

run out. Each two-minute long satellite message is timed so that the end of the 78th bit, which is the last bit of the second synchronization signal, coincides with even 2 minutes of Greenwich mean time **(GMT).** Thus the satellites can also be used as an accurate time reference by all navigators equipped with a satellite navigation set.

Each satellite is designed to receive, sort, and store data transmitted from the ground and to retransmit this data at scheduled intervals as it circles the earth. Each satellite tells users which satellite it is, the time according to the satellite clock, and its present location. With this information, the user's navigation set can determine exactly where the satellite is, one of the necessary steps toward determining a precise navigational position.

Tracking Stations

Tracking stations are located in Maine, Minnesota, California, and Hawaii. As each satellite passes within radio line-of-sight **(los)** of each of these tracking stations, it is tracked to accurately determine its present and future orbits. Just before predicted satellite acquisition, the tracking station's antenna is pointed toward the satellite to acquire its signals. As the satellite rises above the horizon, the tracking antenna continues to follow the satellite's predicted path until the radio receiver in the tracking station locks on to the satellite's transmitted signal. The receiver processor and data processing equipment decode and record the satellite message. The Doppler tracking signal is digitized and sent with the satellite time measurements to the computing center, via a control center, where a refined orbit is calculated.

The tracking stations maintain highly stable oscillators that are continually compared against a WWV transmitted frequency standard. In addition, the Naval Observatory sends daily messages that give the error in the transmitted standard. The Naval observatory error is then added to the data obtained from the frequency standard, and corrections are made to the station oscillators. The station oscillators are used to drive station clocks, which are compared with the time marks received from the satellite. This time data is transmitted by the tracking stations to the control center, where the satellite clock error is calculated and the necessary time correction bits are added or deleted in the next injection message to the satellite.

Computing Center

The central computing center continually accepts satellite data inputs from the tracking stations and the Naval Observatory. Periodically, to obtain fixed orbital parameters for a satellite, the central computing center computes an orbit for each satellite that best fits the Doppler curves obtained from all tracking stations. Using this computed orbital shape, the central computing center extrapolates the position of the satellite at each even 2-minutes in universal time for the 12 to 16 hours subsequent to data injection. These various data inputs are supplied to the injection stations via the control center, as is data on the nominal space of the orbits of the other satellites, commands and time correction data for the satellite, and antenna pointing orders for the injection station antennas.

Injection Station

The injection stations, after receiving and verifying the incoming message from the control center, store the message until it is needed for

transmission to the satellite. Just before satellite time-of-rise, the injection station's antenna is pointed to acquire, lock on, and track the satellite through the pass. The receive equipment receives and locks on to the satellite signals and the injection station transmits the orbital data and appropriate commands to the satellite. Transmission to the satellite is at a high bit rate, so injection is completed in about 15 seconds.

The message transmitted by the satellite immediately after an injection contains a mix of old and new data. The injection station compares a readback of the newly injected data with data the satellite should be transmitting as a check for errors. If no errors are detected, injection is complete, If one or more errors are detected, injection is repeated at two-minute intervals (updating the variable parameters as necessary) until satellite transmission is verified as being correct.

DOPPLER PRINCIPLES

Look at figure 1-7. Stable oscillator frequencies radiating from a satellite coming toward the receiver are first received (T1) at a higher frequency than transmitted, because of the velocity of the approaching satellite. The satellite's velocity produces accordion-like compression effects that squeeze the radio signals as the intervening distance shortens. As the satellite nears its closest point of approach, these compression effects lessen rapidly, until, at the moment of closest approach (T2), the cycle count of the received frequencies exactly matches those which are generated. As the satellite passes beyond this point and travels away from the receiver (T3), expansion effects cause the received frequencies to drop below the generated frequencies proportionally to the widening distance and the speed of the receding satellite.

FACTORS AFFECTING ACCURACY

Measurement of Doppler shift is complicated by the fact that satellite transmissions must pass through the earth's upper atmosphere on their way from space to the receiver. Electrically charged particals in the ionospheric layer cause refraction of these transmissions. To solve this problem, the satellites are designed to broadcast on two frequencies (150 and 400 MHz). The receiver measures the difference in refraction between the two signals and supplies this measurement to the computer. The computer uses this refraction measurement as part of its computation to obtain accurate fixes. The most serious problem affecting accuracy is the effect of uncertainty in the vessel's velocity on the determination of position. Velocity computation problems are inherent in the system. Position error resulting from an error in velocity measurement is somewhat dependent on the geometry of the satellite pass. You can expect about a 0.2 mile error for every one-knot error in the vessel's velocity. Knowing this, you can see that precision navigation of a moving vessel requires an accurate measurement of the velocity of the moving vessel, such as is provided by a good inertial navigation system (See the section on Ship's Inertial Navigation System.). In general, intermittent precision navigation fixes would not be of extreme value for a moving vessel unless it had some means of interpolating between these precision fixes. A good inertial navigation system provides such a means, and simultaneously provides the accurate velocity measurements required to permit position fixes with the NNSS.

In summary, precision navigation for moving vessels can't be provided by the Navy Navigation Satellite System alone, but *can* be provided by the use of this system in conjunction with a good inertial system. Given the orbital parameters of a satellite, the Doppler shift of the signal transmitted from that satellite, and the velocity of the vessel, it is possible to obtain a navigational fix if the satellite is within los of the navigation set and has a maximum elevation at the time of closest approach **(TCA)** of between 10 and 70 degrees. Satellite passes suitable for use in obtaining a navigational fix will usually occur at no more than 2-hour intervals (depending on user latitude and configuration of the satellite constellation). It is a matter of your viewpoint whether you consider the inertial system as a means of interpolating between the satellite navigation fixes or consider the satellite fixes as a means for correcting the inevitable long term drills (see the paragraphs on basic components of an inertial navigation system) of even the best inertial navigation systems.

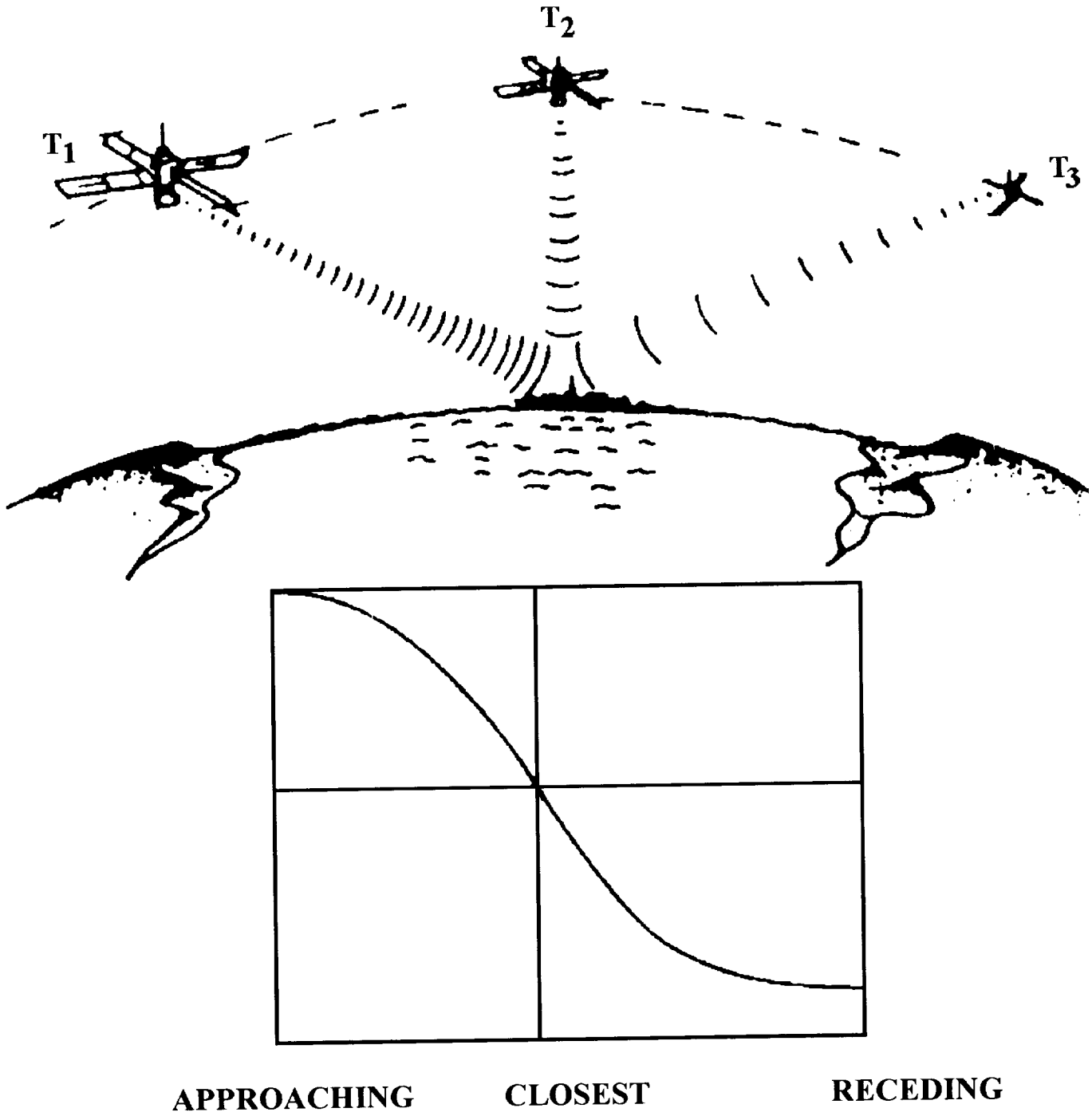

Figure 1-7.—Doppler shift relative to satellite transmitted frequency.

The two most common satellite navigation systems used by the Navy are the AN/WRN-5 and the AN/SRN-19. The following paragraphs provide descriptions of these navigation sets.

AN/WRN-5(V) RADIO NAVIGATION SET

The AN/WRN-5 Radio Navigation Set, shown in figure 1-8, is a receiver-data processor-display set

designed to recieve and phase track signals transmitted by satellites of the NNSS. These signals are processed to obtain navigation information that is monitored on video displays and used elsewhere for ship navigation.

The AN/WRN-5 is designed to be used in various configurations as described below. Each of these configurations is defined by options in external equipment used or variations in inputs and outputs. The options available for alternative configurations are:

1. Teleprinter, ASR-33
2. Additional remote video displays, IP-1154(U)
3. Frequency standard, AN/URQ-10/23 (external reference)
4. Dual antennas (separate 400-MHz and 150-MHz antennas)
5. Input/output bus
6. External lock indicator
7. 100-KHz output

The functional elements of the AN/WRN-5 include the following components:

1. Preamplifier unit
2. Built-in two channel receiver
3. Built-in expanded data processor unit **(XPDU)** with 16K word memory
4. Front panel keyboard for operator-to-system interface
5. Front panel magnetic tape cassette transport with read/write capability for OPNAV program loading or data recording
6. Front panel video display for system to operator input/output
7. Remote video monitor
8. Built-in synchro-to-digital convertor for interface with the ship's speed and heading sensors to provide dead reckoning capability

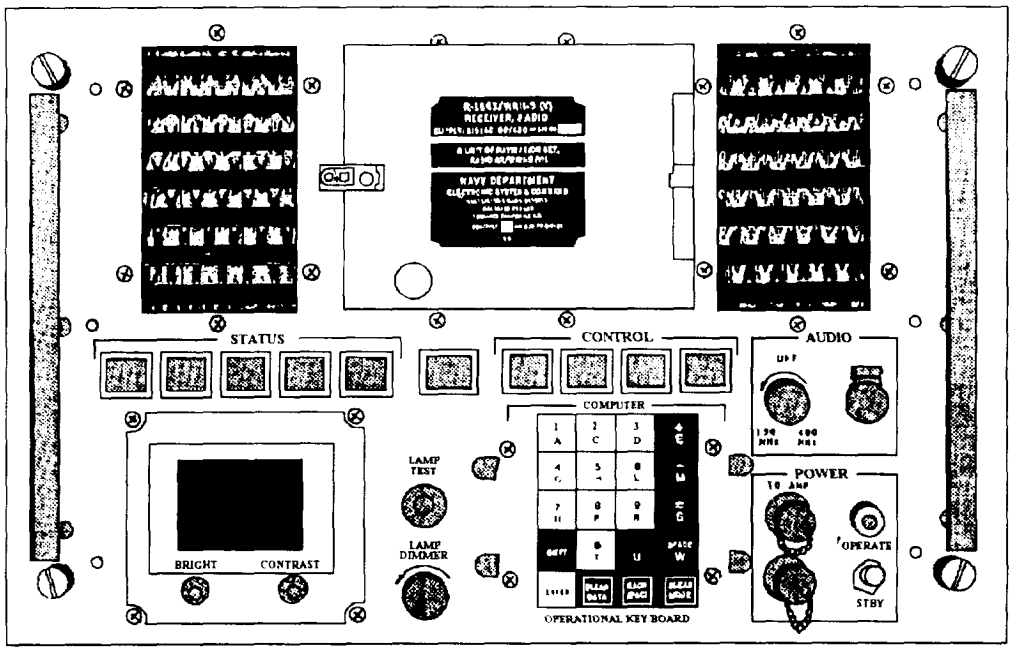

Figure 1-8.—AN/WRN-5 front panel.

and accurate satellite position fixes during ship maneuvers

9. Optional addition of a teleprinter

The combination of fictional elements in the AN/WRN-5 provides many capabilities including automatic storage of satellite information, time-ordered alerts for up to eight satellites, and built-in self test. The front panel video display provides current time, latitude/longitude, dead reckoning position (automatically updated by satellite fixes), and satellite tracking information such as fix merit and satellite alerts. You will find specific information on the capabilities of this navigation set in the AN/WRN-5 operation and maintenance technical manual.

AN/SRN-19(V)2 RADIO NAVIGATION SET

The AN/SRN-19(V)2 is an automatic shipboard navigation set that provides a continuous display of the ship's position. The ship's position, which is obtained by dead reckoning on true speed and heading, is periodically corrected by satellite fixes. Specifically, the navigation set can perform the following functions:

1. After each successful satellite pass, computes and displays the present location of the ship to a nominal at-sea accuracy of 0.25 nautical mile.

Note: Accuracy of the fix is affected by high sunspot activity. During these periods, nominal at-sea accuracy may degrade to approximately 0.5 nautical mile.

2. Dead reckons between satellite fixes

3. Computes and displays the range and bearing from the present position to any destination using the great circle program.

4. Computes and displays the next expected rise time and elevation at closest approach of the previously tracked satellite,

5. Displays GMT accurate to 1 second.

6. Displays inputted speed and heading.

7. Displays inputted set and drift.

8. Displays data on a tracked satellite.

9. Performs a self-test of computer functions [limited to verification of the digital circuitry).

The AN/SRN-19(V)2 consists of the major components shown in figure 1-9.

Figure 1-10 shows a simplified block diagram of this system. The following paragraphs describe these components.

ANTENNA GROUP OE-284/SRN-19(V)

The antenna group consists of the AS-3330/SRN-19(V) antenna and AM-7010/SRN-19(V) rf amplifier

Antenna

The antenna is a linear, vertically-polarized type that receives rf signals transmitted by the satellite. Its horizontal pattern is omnidirectional; its vertical pattern varies approximately 11 dB from 10 to 70 degrees above the horizontal plane.

Rf Amplifier

The rf amplifier provides initial amplification of the 400-MHz satellite signals from the antenna and then sends them, via rf coaxial cable, to the receiver for further amplification and processing. The rf amplifier consists of a bandpass filter module, a 400-MHz amplifier, and a dc block module.

RECEIVER-PROCESSOR R-2135/SRN-19(V)

The receiver-processor consists of a single channel (400-MHz) receiver, a 5-MHz reference oscillator, a data processor with a programmable read-only memory **(PROM)** program, a keyboard, display, cassette recorder, two synchro-to-digital **(S/D)** converters, and a power supply. It processes inputs from the rf amplifier, ship's EM log, gyrocompass, and receiver-processor keyboard.

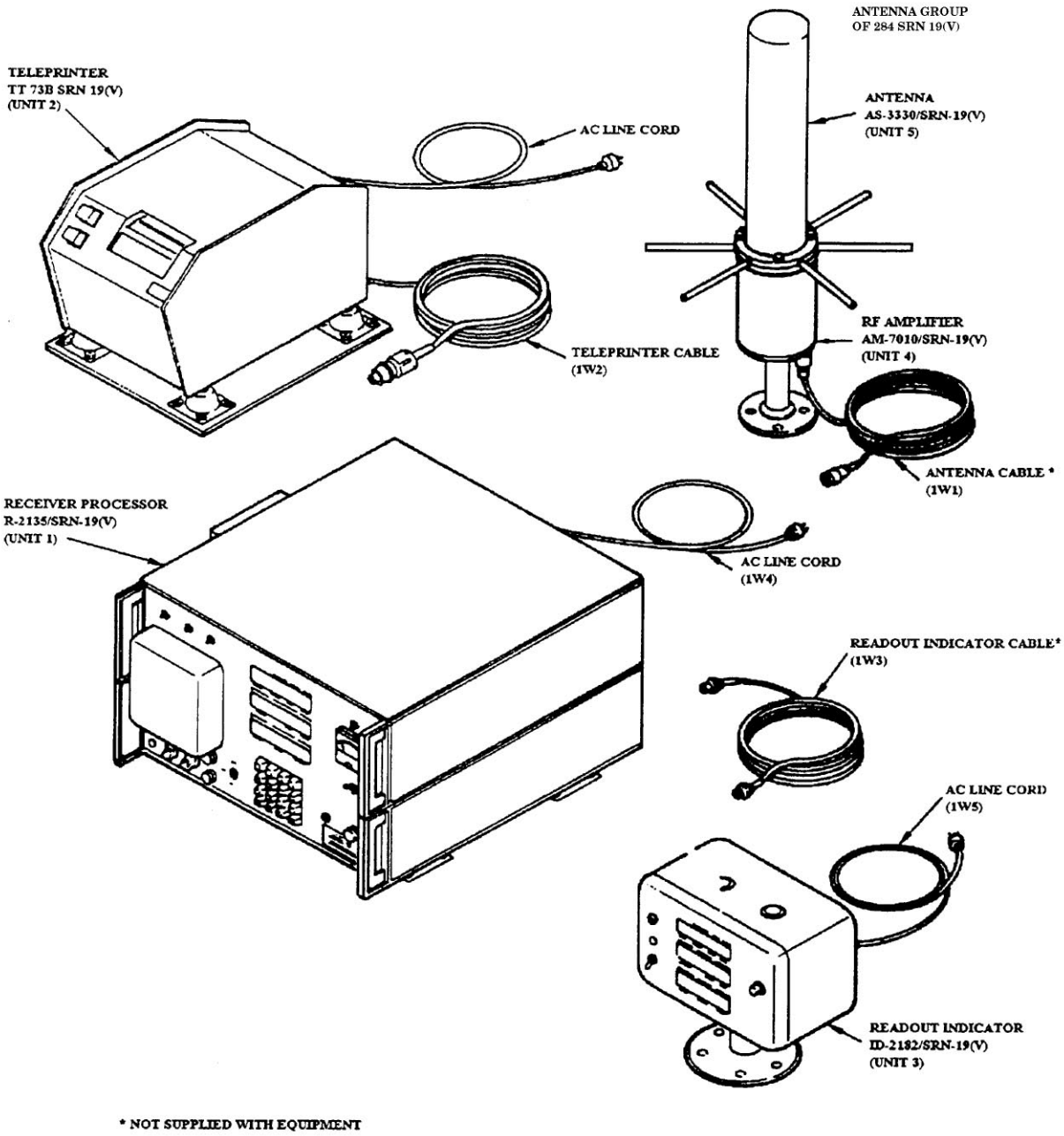

Figure 1-9.—AN/SRN-19(V)2 major components.

Receiver

The receiver extracts, amplifies, and formats message information from the rf signal transmitted by the satellite, and measures the Doppler shift of the signal. The message data obtained by demodulation of the rf carrier describes the satellite's position at the time of transmission.

Data Processor

This unit processes inputs from the receiver, ship's EM log, and gyrocompass through the S/D convertors and the keyboard. It then performs computations and provides the desired outputs to the front panel display, readout indicator, teleprinter, and cassette recorder.

READOUT INDICATOR AND TELEPRINTER

The readout indicator provides an identical visual readout of the data displayed on the front panel of the receiver-processor. The readout indicator is usually located at a site some distance from the receiver-processor.

The teleprinter provides a permanent record of displayed data. The printouts for modes 01 and 03 occur every 15 minutes or as selected by the operator. A printout also occurs each time a display mode is elected and when satellite fix data is received.

One final note on the AN/SRN-19 system. You must "tell" the equipment where it is when it is initialized. You must also enter information on antenna height before the system can provide an accurate fix.

You can find specific information on the AN/SRN-19(V)2 in the shipboard operations and maintenance manual for this navigation set.

NAVSTAR GLOBAL POSITIONING SYSTEM

NAVSTAR GPS is a space-based, radio navigation system that provides continuous, extremely accurate three-dimensional position, velocity, and timing signals to users world-wide. It consists basically of ground control, satellites, and user equipment, as shown in figure 1-11.

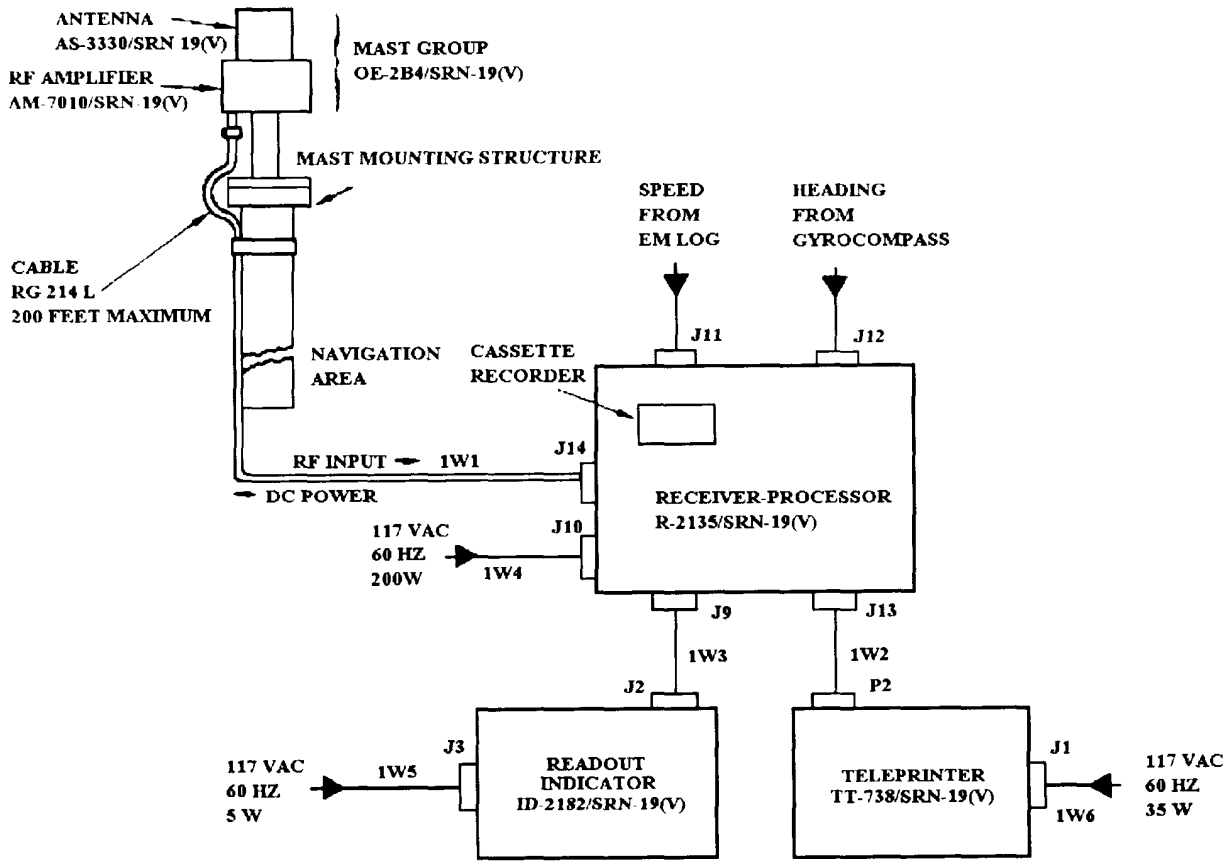

Figure 1-10.—AN/SRN-19(V)2 simplified block diagram.

NOTE

GPS will become the primary reference navigation system for surface ships, submarines, and aircraft. Refer to the DOD policy statement under the LORAN and OMEGA section of this chapter for specific details on this important transition.

GROUND CONTROL

The ground control segment tracks the satellites, monitors and controls satellite orbits, and updates the satellite navigation data message. The ground control system consists of unmanned monitor stations and a manned control center. Monitor stations, located throughout the world, use GPS receivers to track each satellite. Tracking information gathered by the monitor stations is sent to the control center, where a precise position and a clock error for each satellite are calculated. The control center also calculates satellite positioning for the group of satellites. Positioning data for a single satellite is called ephemeris data; data for a group of satellites is called almanac data. Once each 24 hours, the control center transmits the ephemeris and almanac data to each satellite to update the navigation data message.

SATELLITES

There are 21 active operational and 3 active spare satellites in circular orbits, with a 55-degree inclination to the earth. These satellites provide navigation data to the navigation sets. The satellites are arranged in six concentric rings that allow them to orbit the earth twice a day and provide world-wide continuous coverage. Each satellite broadcasts two

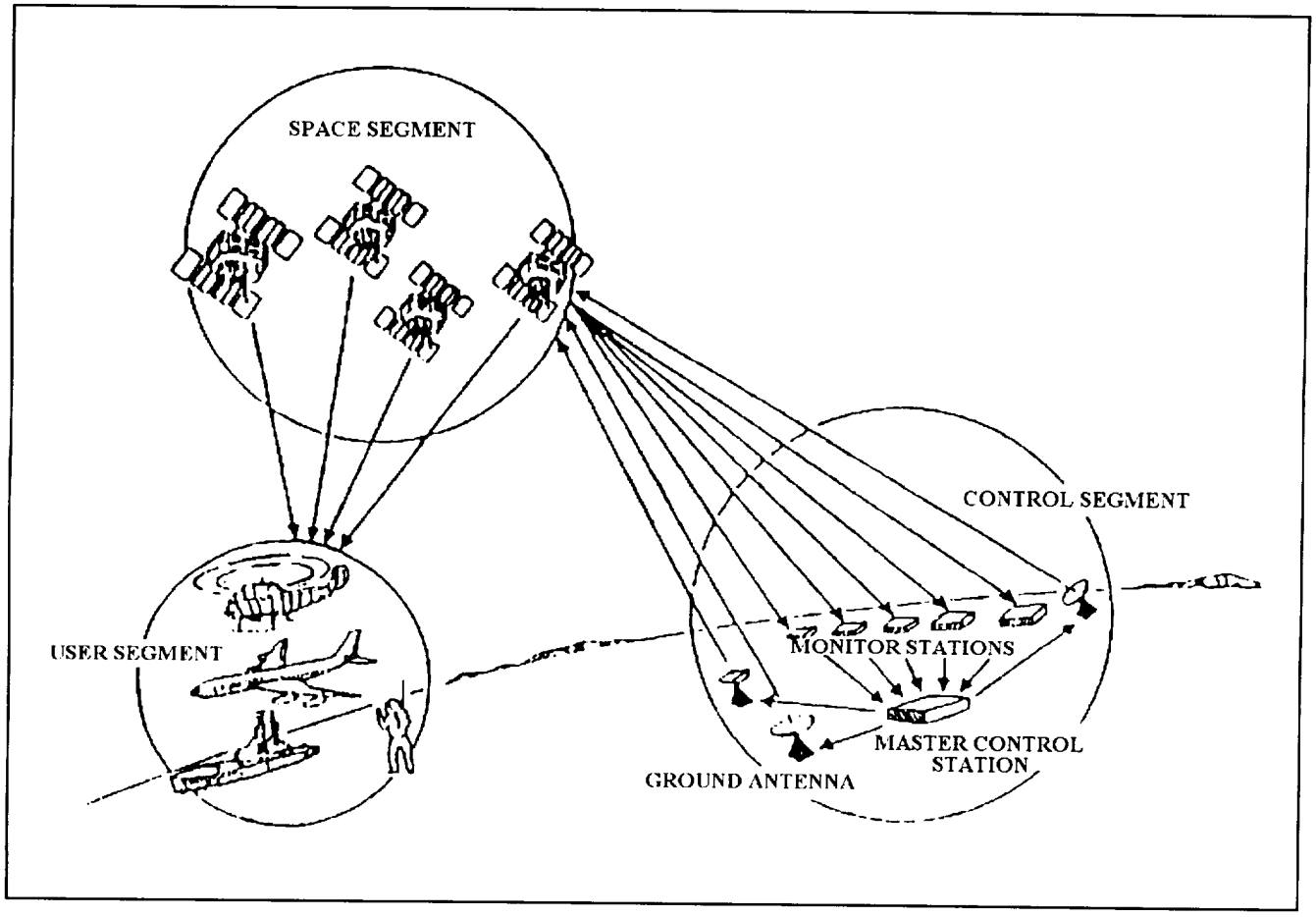

Figure 1-11.—NAVSTAR GPS major elements.

spread-spectrum rf signals, 1575.42 MHz **(LI-RF)** and 1227.60 MHz **(L2-RF).** Each signal is modulated with a unique code sequence and a navigation data message. The code sequence allows the navigation sets to identify the satellite, and the data message provides the navigation sets information about the operation of the satellite.

An observer on the ground will observe the same satellite ground track twice each day, but the satellite will become visible 4 minutes earlier each day because of a 4 minute per day difference between the rotation of the earth and the satellite orbit time. The satellites are positioned so a minimum of four satellites are always observable to a user anywhere on earth.

Satellite Signal Structure

The satellites transmit their signals using spread spectrum techniques. Two types of techniques are used: course acquisition (C/A) code and precise (P) code. The C/A code is available to military and civilian GPS users. The P code is available only to U.S. military, NATO military and other users as determined by the DOD.

Since only the P code is on both frequencies, the military users can make a dual-frequency comparison to compensate for ionospheric propagation delay. The C/A code-only users must use an ionospheric model, which results in lesser navigation accuracy. Superimposed on both codes is the NAVIGATION-message **(NAV-msg),** containing satellite ephemeris data, atmospheric propagation correction data, and satellite clock-bias information.

Satellite Ranging

GPS navigation is based on the principle of satellite ranging. Satellite ranging involves measuring the time it takes the satellite signal to travel from the satellite to the navigation set. By dividing the travel time by the speed of light, the distance between the satellite and the navigation set is known. By ranging three satellites, a three-dimensional picture, such as the one shown in figure 1-12, can be developed. The distance measurement to each satellite results in a sphere representing the distance from the navigation set to the satellite. The point where the three spheres intersect (X) is the position of the navigation set, This explanation does not account for errors. For satellite ranging to provide accurate position data, the following three sources of error must be compensated for:

- Satellite position and clock error
- Atmospheric delay of satellite signals
- Navigation set clock error

With these errors compensated for, the GPS can determine position fixes within 50 feet or less and is accurate to within a tenth of a meter-per-second for velocity and 100 nanoseconds for time. This accuracy, however, requires inputs from four satellites.

USER EQUIPMENT

User equipment is installed in ships, aircraft, and motorized vehicles. The vehicle version can also be carried by personnel (particularly SEAL teams and other special forces units) as a manpack. The most common manpack version is the AN/PSN-8( ). The most common shipboard GPS receiver is the AN/WRN-6. These GPS receivers will be described later in this chapter.

Signal Acquisition

During operation, navigation sets collect and store satellite almanac data in critical memory. The almanac data is normally available when the navigation set is first turned on and provides information on satellite locations. Operators may input information about the navigation set position, time, and velocity to enhance the information in critical memory. With this information, the navigation set determines which satellites are available and searches for the code sequences that identify those particular satellites. When the C/A code of an available satellite is identified, the navigation set switches to the more accurate P code, collects the navigation data message, and updates critical memory.

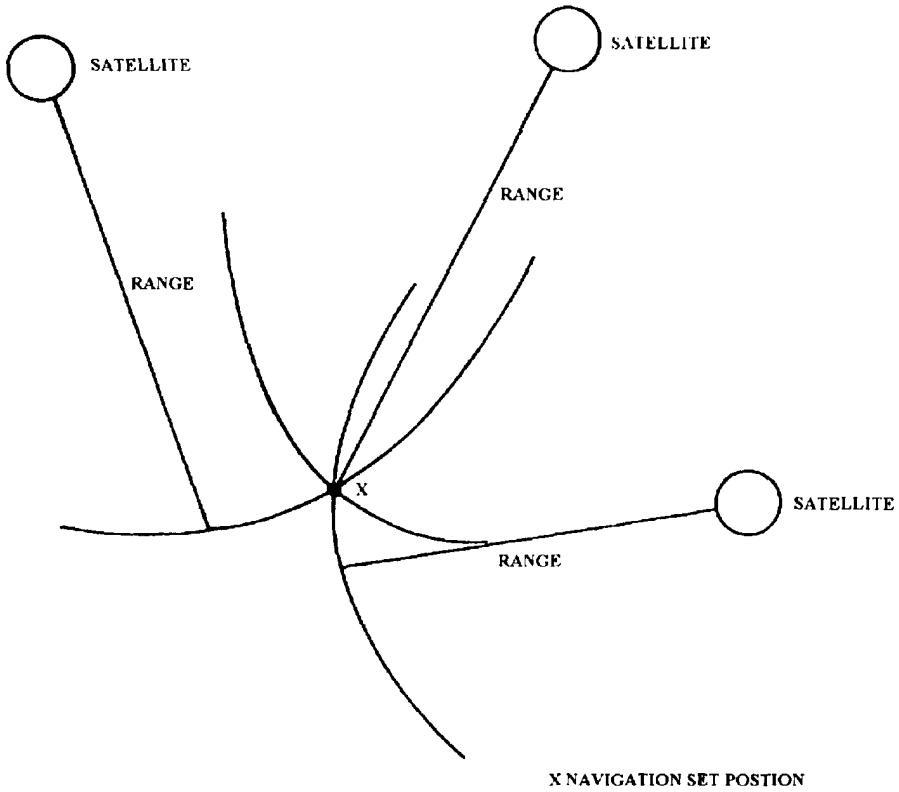

Figure 1-12.—Satellite ranging.

Navigation Set Clock Error

GPS navigation sets determine distance to a satellite by accurately measuring the time difference between satellite signal transmission and when the navigation set receives this signal. This difference in time is directly proportional to the distance between the satellite and the receiver. Therefore, the same time reference must be used by both the receiver and the satellite.

The clock in the GPS receiver in not nearly as accurate as the atomic clock in the satellite. This causes the receiver and satellite clocks to be slightly out of sync, which in turn causes the time measurements to be inaccurate. The error is further compounded by the distance calculation, so the position of the navigation set cannot be accurately determined.

The navigation set compensates for these errors by using the distance measurement from a fourth satellite to calculate the clock error common to all four satellites. The navigation set then removes the clock error from the distance measurements, and then determines the correct navigation set position.

Signal Delay and Multipath Reception

Two types of atmospheric delay can affect the accuracy of navigation set signal measurements. The first is tropospheric delay. Tropospheric delay can be accurately predicted; the prediction is included in the almanac data.

The second type of delay is caused when the satellite signal passes through the ionosphere. This type of signal delay is caused by the ionosphere being thicker in some areas and by satellite signals received from nearer the horizon having to pass through more of the ionosphere than those received from directly overhead. Ionospheric delay will phase shift the lower satellite transmission frequency, L2-RF, more than the higher frequency, L1-RF. The navigation set measures ionospheric delay by measuring the phase shift between these two signals and then uses this computation to compensate for the ionospheric delay.

Multipath reception is caused by a satellite signal reflecting off of one or more objects. This causes the

reflected signals to reach the navigation set at different times than the original signal. The reception of multipath signals may cause errors in the navigation set calculations. The AN/WRN-6 navigation set makes operators aware of multipath errors by a “fail” or “warn” message and/or fluctuations in the carrier-to-noise ratio. Multipath reception may be corrected by changing the ship’s position.

AN/WRN-6(V) Satellite Signals Navigation Set

The Satellite Signals Navigation Set AN/WRN-6(V)computes accurate position coordinates, elevation, speed, and time information from signals transmitted by NAVSTAR Global Positioning System (GPS) satellites. In the P mode, it has an accuracy of 16 meters. In the C/A C/A mode. it has an accuracy of 100 meters, though better results have been obtained by individual users.

The AN/WRN-6(V), shown in figure 1-13, operates in three modes.

The “Initialization” mode is part of the set start-up. During initialization, the operator tests current position, date, and time data, either manually or from other equipment. The data entered is used to speed up satellite acquisition.

“Navigation” is the normal operating mode. During the navigation mode, the set receives satellite data, calculates

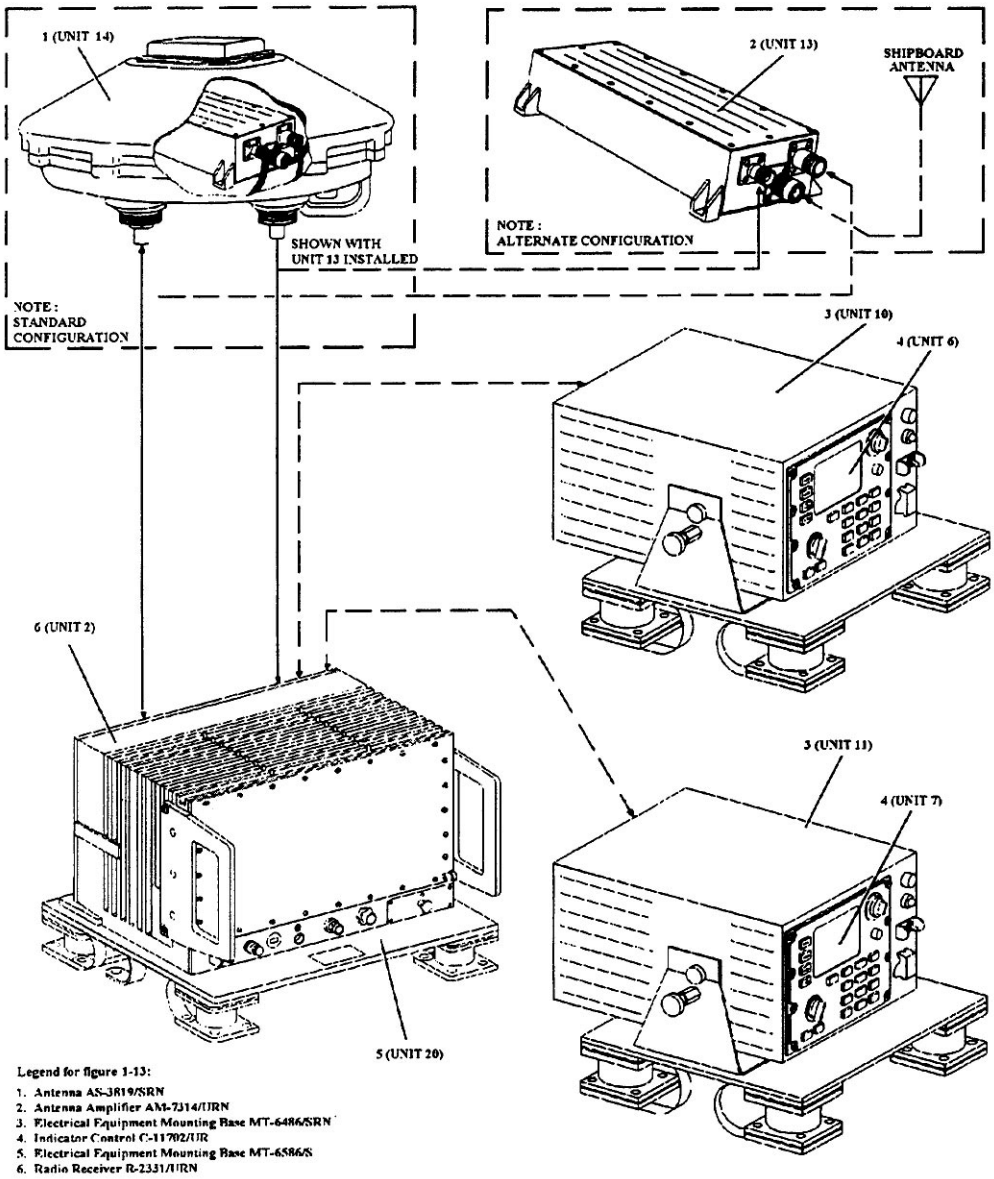

Figure 1-13.—Satellite Navigation Set AN/WRN-6(V).

navigation data, exchanges data with other interconnected systems, and monitors the set's performance. The navigation mode allows the operator to enter mission data; view position, velocity, and time data; and control the set's configuration.

The "self-test" mode allows the operator to perform a complete test of the navigation set at any time. When the set is in "test," it will not track satellites.

The two major components of the AN/WRN-6(V) are the R-2331/URN receiver and the indicator control C-11702/UR. The other units (antenna, antenna amplifier, and mounting base) perform functions similar to those of similar units in other systems. For more detailed information on this system, refer to the AN/WRN-6(V) operation and maintenance technical manual.

AN/PSN-8( ) Manpack Navigation Set

The AN/PSN-8( ) operates similarly to the AN/WRN-6(V), though obviously it is not interfaced with other equipment. Shown in figure 1-14, each manpack contains a receiver section and a computer section. The receiver processes the rf signals from the satellites and sends the satellite's positions and times to the computer. The computer uses the positions and times to find the satellite set's position coordinates, elevation, and changes in the position of the manpack set. The time it takes for the set to change position is used to compute speed. For more detailed information on this navigation set. refer to the operator's manual for the AN/PSN-8( ) Manpack

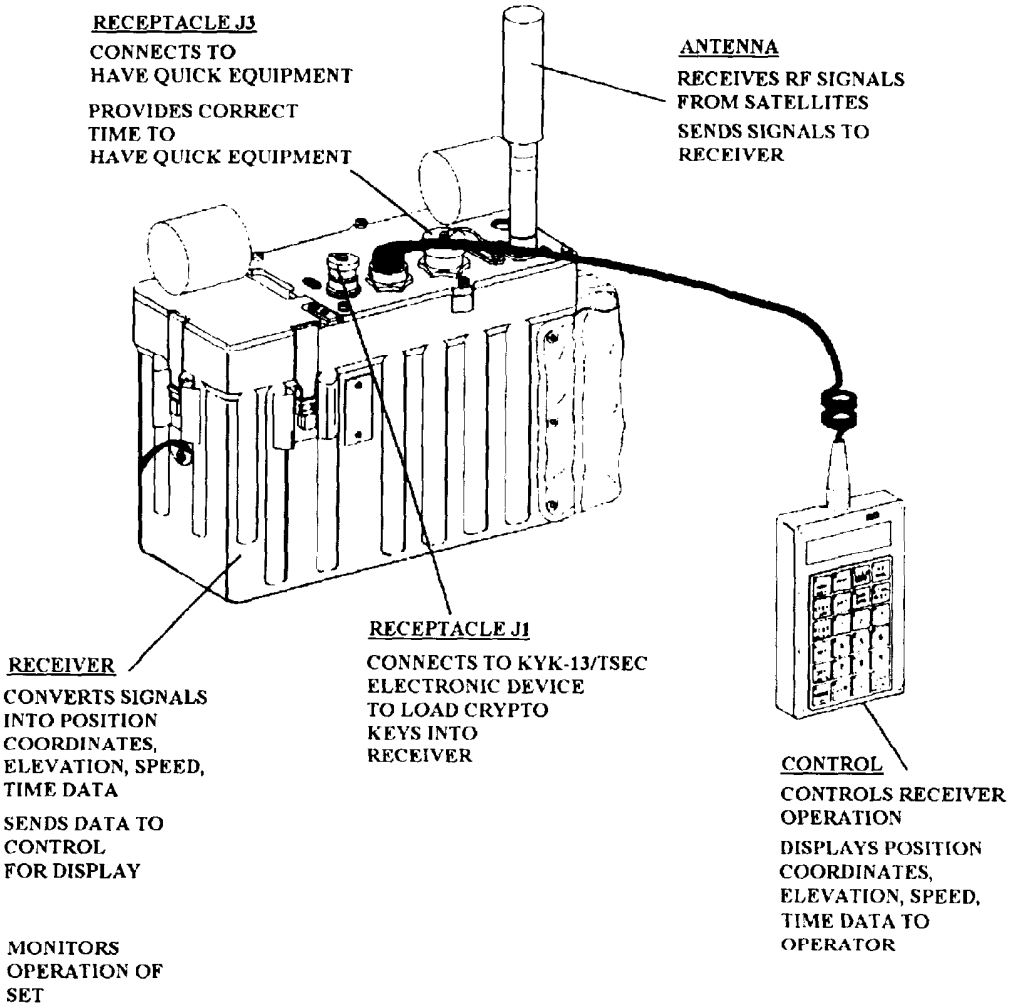

Figure 1-14.—Manpack Navigation Set AN/PSN-8( ).

Navigation Set. The AN/VSN-8( ) Vehicular Navigation Set is also included in this manual.

NAVIGATIONAL AIDS

Other equipment used for navigation that ETs are responsible for includes: navigation radars, surface search radars (sometimes used as navigation radars) and fathometers. Information on surface search and navigation radars is contained in NAVEDTA 12414, *Radar Systems.*

The following paragraphs will discuss fathometers.

FATHOMETERS

Fathometers are used for taking depth soundings. They are particularly useful when the vessel is transitioning shallow, unfamiliar waters. A block diagram of the Sonar Sounding Set AN/UQN-4A is shown in figure 1-15,

On many ships the Sonar Technicians will be responsible for this equipment, but there are ships (mostly noncombatants) on which ETs are responsible for the fathometers. For more detailed information on fathometers, refer to the appropriate equipment technical manual.

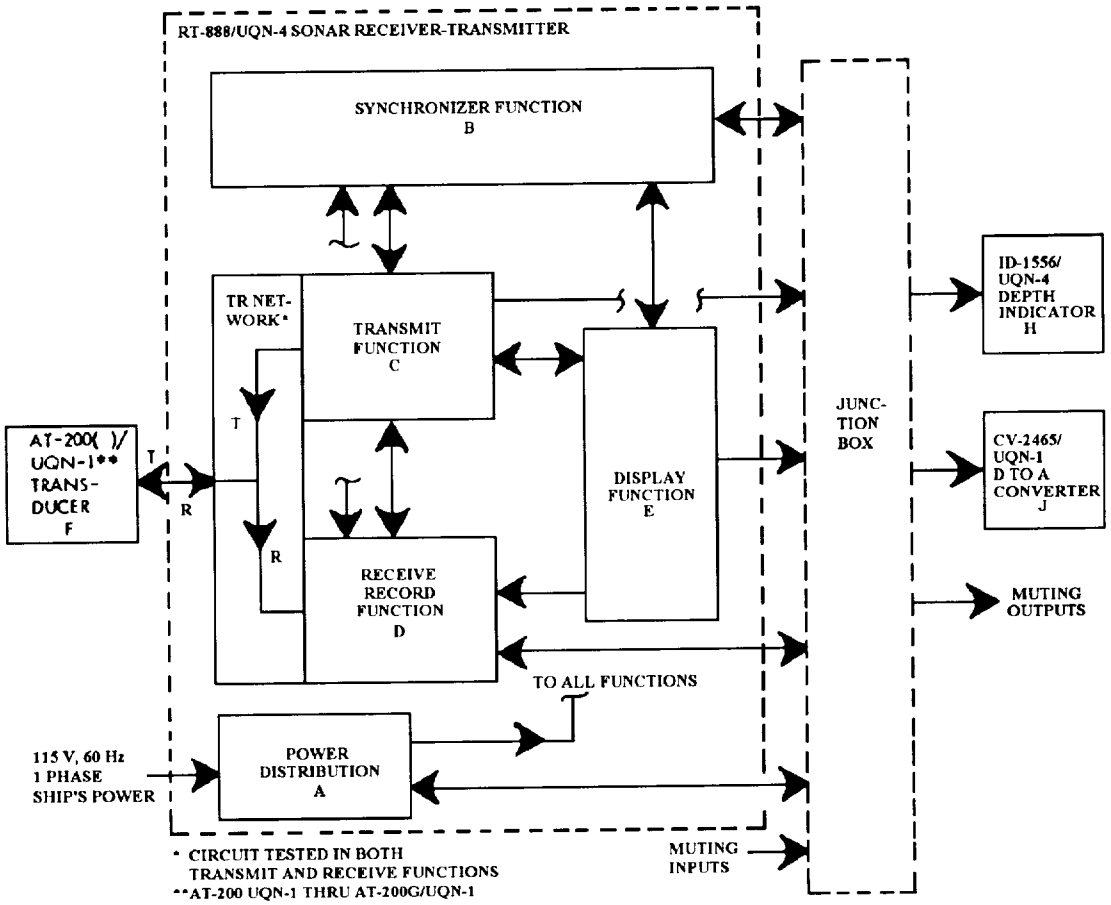

Figure 1-15.—AN/UQN-4A functional diagram.