CHAPTER 8

FORKLIFTS

The forklift is a primary piece of equipment that is essential to the mission of the NCF. Forklifts are used to support construction operations whenever there is a need to lift, load, or unload materials or supplies. Because of the variety of makes and models of forklifts used in the Navy and the NCF, this chapter covers only the characteristics and basic principles of operations of forklifts. By reading the operator's manuals, you can obtain detailed information about each make and model.

MATERIALS-HANDLING EQUIPMENT

Forklifts are classified as materials-handling equipment. The term materials handling describes an ongoing activity for every construction project or operation that requires the picking up and moving of raw materials, processed parts, finished products, tools, equipment, supplies, or maintenances items. Every operation that requires raising, lowering, or moving an item is classified as materials handling.

Since materials handling involves lifting, lowering, and moving in some form, forklifts excel over other methods of handling. Forklifts are specifically designed to ensure efficient handling of materials under varied conditions. Design specifications and performance characteristics of forklifts define their capabilities and limitations under adverse conditions. To operate a forklift efficiently, you must know its capabilities and limitations.

This chapter covers the capabilities, limitations, attachments, and principles of operation of warehouse and rough terrain forklifts.

WAREHOUSE FORKLIFTS

The most common types of warehouse forklifts used are either electric-, gasoline-, or propane-powered and have solid, semisolid, or pneumatic rubber tires. These forklifts are used in warehouses or on hard-surfaced outdoor storage areas. The warehouse forklift (fig. 8-1) is a unit designed to pickup, carry, and

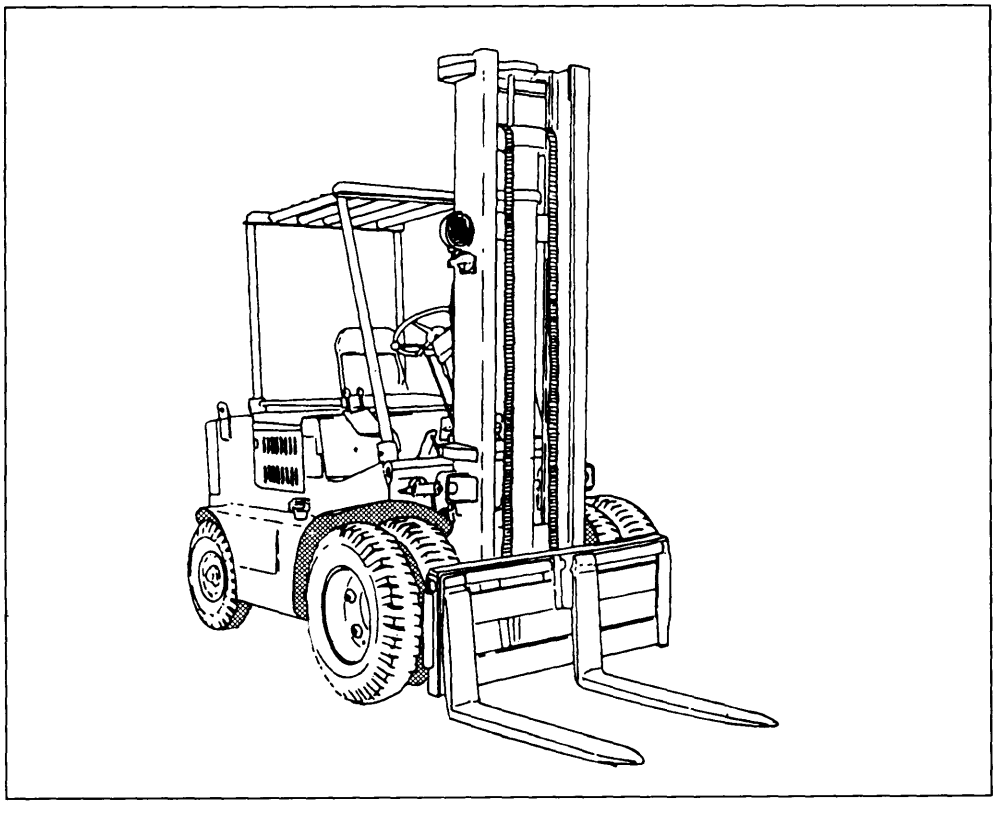

Figure 8-1.—Warehouse forklift

stack unit loads of supplies and equipment. Standard warehouse forklifts have lifting capacities from 2,000 to 15,000 pounds and lifting heights from 100 to 210 inches. Warehouse forklifts are equipped with a telescopic mast that permits loads to be lifted beyond the height of the collapsed mast. The height the forks can raise before the inner slides move upward from the mast and increase the overall height is called **free lift.**

4K ROUGH-TERRAIN (RT) FORKLIFT

The 4K rough-terrain (RT) forklift (fig. 8-2) is a diesel engine-driven, rubber-tired, self-contained, rider type of mechanized materials-handling vehicle. They are designed to lift loads of 4,000-pound capacity with a 24-inch load center to a maximum height of 100 inches. The lifting forks are mounted on the front of the vehicle and the engine faces the rear. Controls for operating the lifting forks (lifting, tilting, rotating, and side shifting) are located to the right when the operator is sitting in the operator's seat.

The 4K (RT) forklift is designed for the loading and unloading of flatcars, flatbed trailers, cargo aircraft, and landing craft. Additionally, the 4K (RT) is used for stocking, unstacking, and transporting heavy-crated boxes, containers, and palletized loads of heavy equipment and supplies over unprepared and unstable surfaces. This forklift is the primary forklift used in rough terrain, such as a beach, in deep sand, or where the terrain is covered with ice, snow, or mud, or where hard standing is not available. The 4K (RT) forklift can be used both indoors and outdoors and is capable of fording streams or pools of water up to 30 inches deep. This forklift can be transported by tractor-trailer or by military aircraft.

The 4K forklift may be driven to project sites under its own power without any special preparation; however, when performing the prestart operational check, you should ensure the safety pin (fig. 8-3) is disengaged before operating. The safety pin prevents the forklift

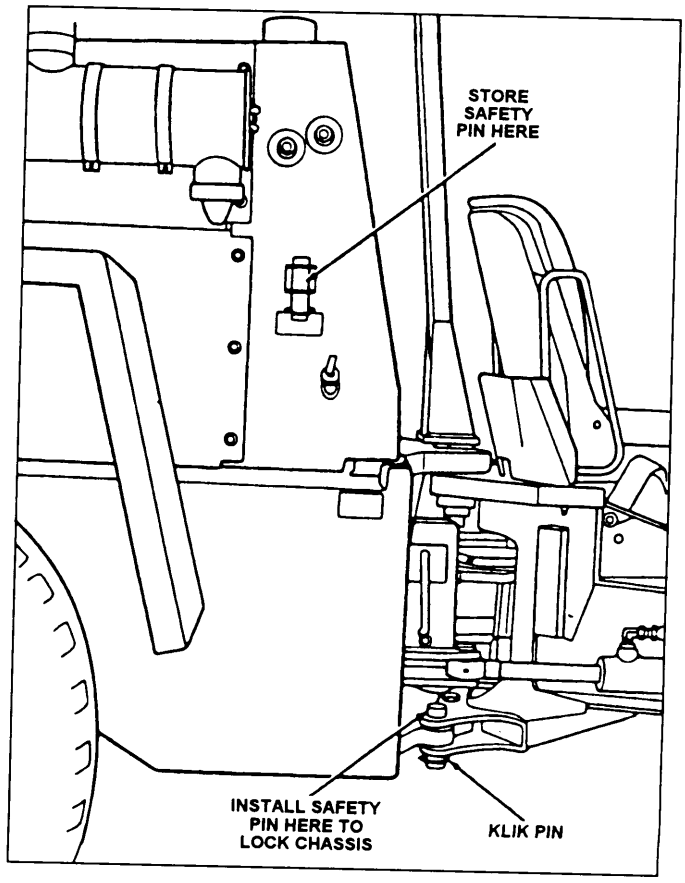

Figure 8-3.—Safety pin location.

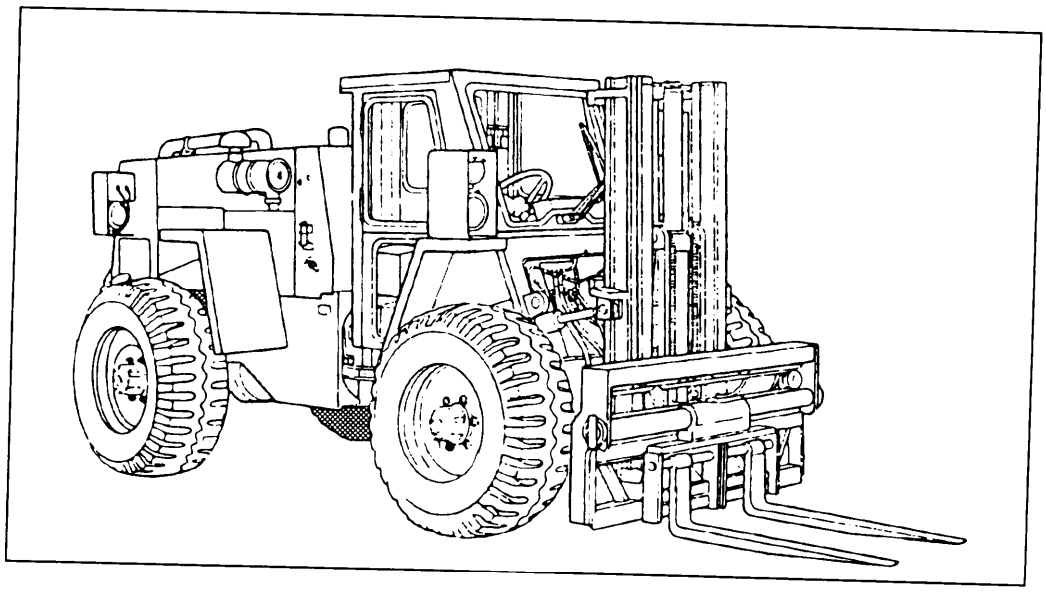

Figure 8-2.—4K rough-terrain (RT) forklift.

from articulating; therefore, the forklift cannot be steered. Failure to disengage the pin may cause serious injury or death.

The 4k forklift can be towed rearward using the tow bar (fig. 8-4) located on the rear of the vehicle.

The towing procedure for the 4K (RT) forklift is as follows:

1. Remove the pin securing the tow bar in the vertical position and lower the tow bar into the towing position and attach it to the pintle hook on the towing vehicle.

2. Disconnect the hook end of the two safety chains from the forklift and attach them to the towing vehicle.

3. Push the **axle disconnect lever** (fig. 8-5) to the right toward the front chassis to disconnect the axles for towing.

The axle disconnect lever controls the engagement of the transmission output shaft to the front and rear axles. To engage the axles for operation, you push the lever to the left towards the rear of the vehicle.

4. Open the steering **bypass valve** (fig. 8-6) by turning it counterclockwise fully.

The steering bypass valve allows the front chassis to pivot freely on the rear chassis when towing the forklift. For normal steering control, close the valve by turning the knob clockwise fully.

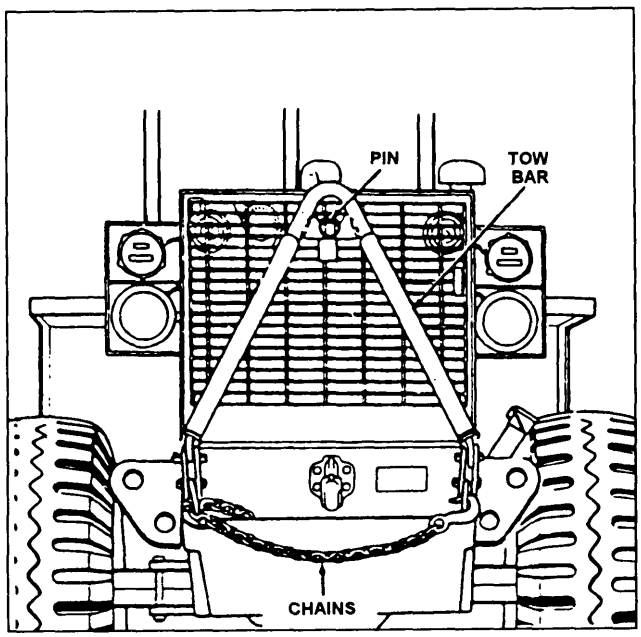

Figure 8-4.—Tow bar and chains.

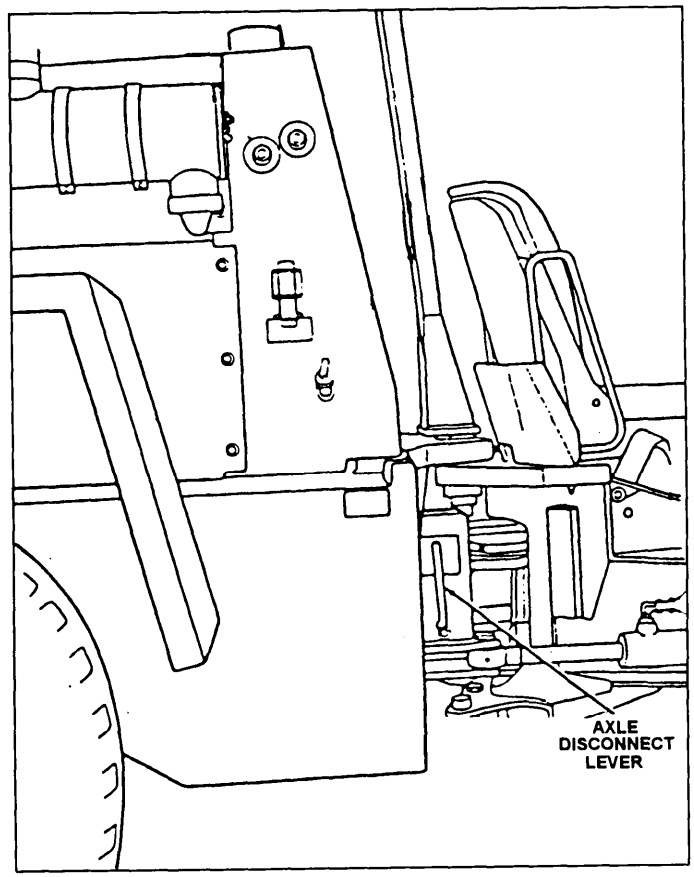

Figure 8-5.—Axle disconnect lever.

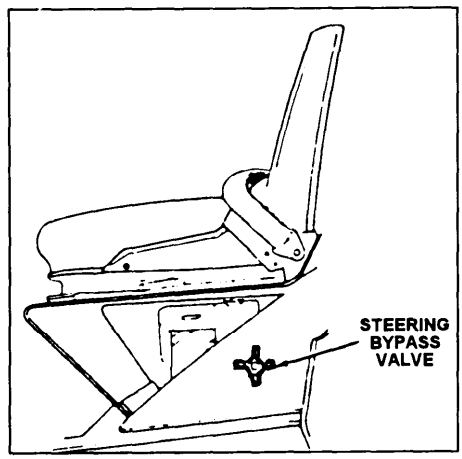

Figure 8-6.—Steering bypass valve.

CAUTION

Verify that the steering bypass valve is closed before operating the 4K forklift.

5. Remove the safety pin (fig. 8-3), if installed. **The safety pin must not be installed when the forklift is being towed.**

CAUTION

Before pushing the forklift, install the safety pin to prevent the forklift from articulating and damaging the tow bar.

NOTE: Do not tow the forklift faster than 35 mph.

6K ROUGH-TERRAIN (RT) FORKLIFTS

The 6K rough-terrain (RT) forklifts (fig. 8-7) are all-wheel drive, all-wheel steer materials-handling equipment capable of lifting 6,000-pound loads to a height of 200 inches.

The 6K (RT) forklift is designed to handle loads over rough terrain consisting of unprepared or unstabilized surfaces, such as beaches, deep sand, snow, ice, or mud. The 6K (RT) is used primarily for loading and unloading flatbed trailers, landing craft, and other types of cargo vessels.

A hydraulic-operated forklift mechanism, mounted on the extreme front of the 6K (RT) forklift, provides for lifting, reaching, tilting, and sliding loads during material-handling operations.

A unique design feature of the rough-terrain forklift is an oscillating hydraulic cylinder that allows the rotation of the forklift frame about its longitudinal axis when being operated over rough terrain. The operator controls the rotation by manipulating the control that activates the oscillating hydraulic cylinder. The 6K (RT) forklift is also equipped with a power shift

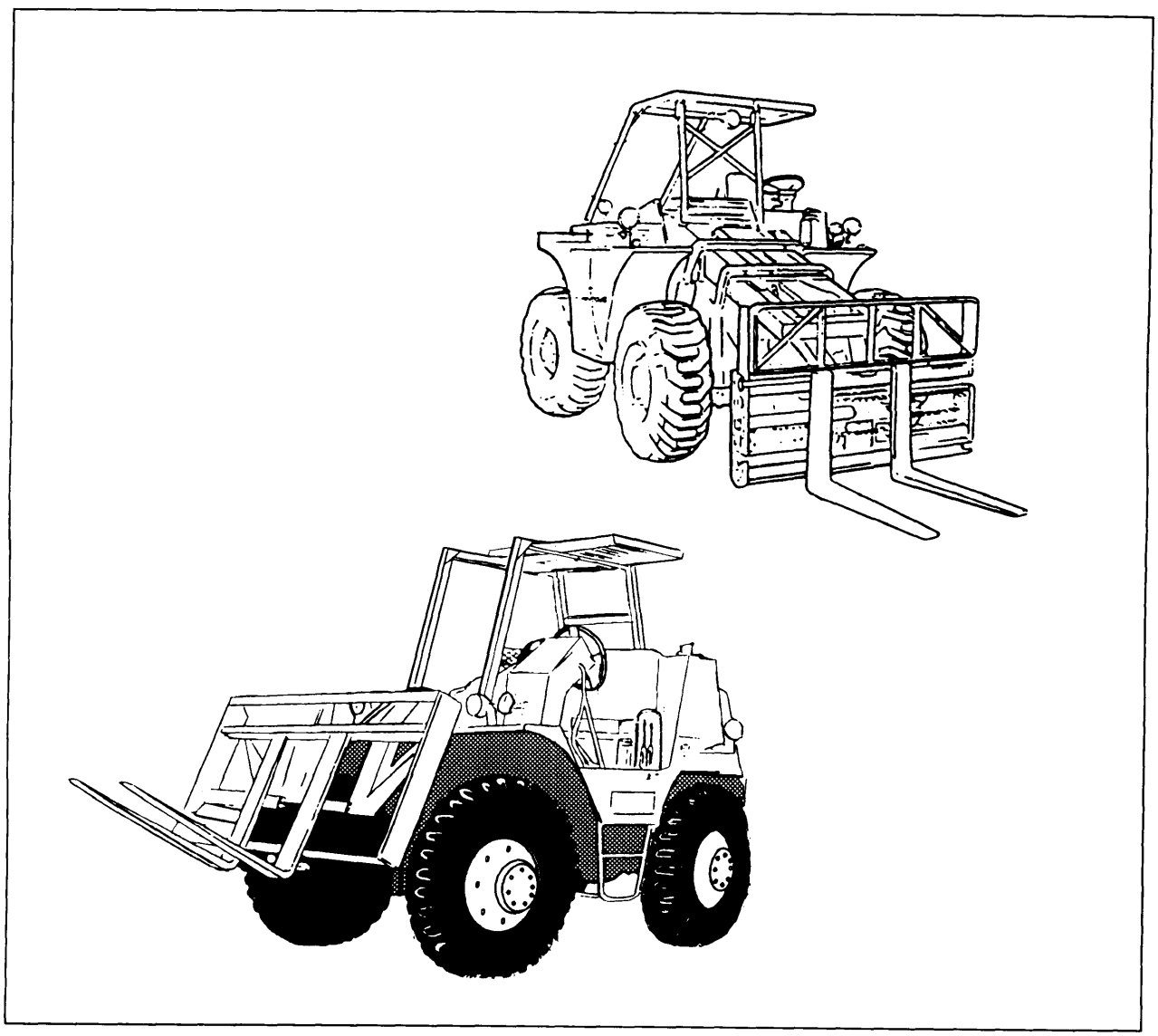

Figure 8-7.—6K rough-terrain (RT) forklifts.

transmission for smooth acceleration, deceleration, and easy handling.

LIFT-KING FORKLIFT

The NCF has two types of lift-king forklifts (fig. 8-8) rated at 12K and 16K. These two models provide a lifting capacity of 12,000 to 16,000 pounds at a 48-inch load center to a height of 120 inches. The lift-king forklift is equipped with forklift oscillation, load side shift, lift interrupt, fork positioning, four-wheel and two-wheel-crab steering selection, and counterweight lowering.

The lift-king forklift is equipped with an inching control that is controlled by the inching pedal located to the left of the brake pedal. Depressing the inching pedal slightly varies the amount of oil pressure in the transmission, allowing the forklift to be "inched" along slowly while the engine is operated at high speed for fast lifts. When the inching pedal is depressed fully, the transmission is disengaged.

NOTE: Do not use the inching pedal as a clutch and under high-torque requirements.

The mast of the lift-king forklift is equipped with a lift interrupt device that prevents lifting the fork assembly above 43 inches from the ground. This is a safety device to prevent raising the mast while inside an aircraft and causing extensive damage. To lift loads higher than 43 inches, you must press the red-colored manual lift interrupt override button. This button allows the forks to attain their maximum lift height when required.

The lift-king forklift is air transportable; however, where the load per axle weight cannot be exceeded, the front carriage assembly and rear counterweight must be removed. The procedure of carriage removal is as follows:

1. Lower the forks to the ground and tilt the mast slightly forward to produce slack in the lifting chains.

2. Remove the lower chain anchor pins.

3. Raise the mast above the carriage rollers and back the forklift out, leaving the forks and carriage on the ground.

NOTE: For reinstallation, the procedures are simply reversed.

The procedure for counterweight removal is as follows:

1. Remove the two bolts (one on each side of the forklift) that secures the counterweight (fig. 8-9).

2. Lower the counterweight lifting arm to rest the counterweight on the ground (hydraulic control lever is located in the back of the operator's cab to the right of the seat).

3. Remove the pin from the shackle to disconnect the arm from the counterweight. Remember: Store the bolts and the pin in the toolbox.

4. Drive the forklift away from the counterweight.

NOTE: When the lift-king forklift is transported on a tractor-trailer, seal the exhaust pipe to prevent autorotation of the turbocharger turbine due to wind velocity. Failure to do so can result in damage to the turbine bearing due to lack of lubrication.

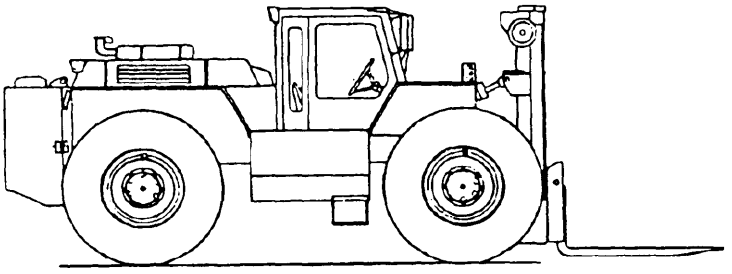

Figure 8-8.—Lift-king forklift.

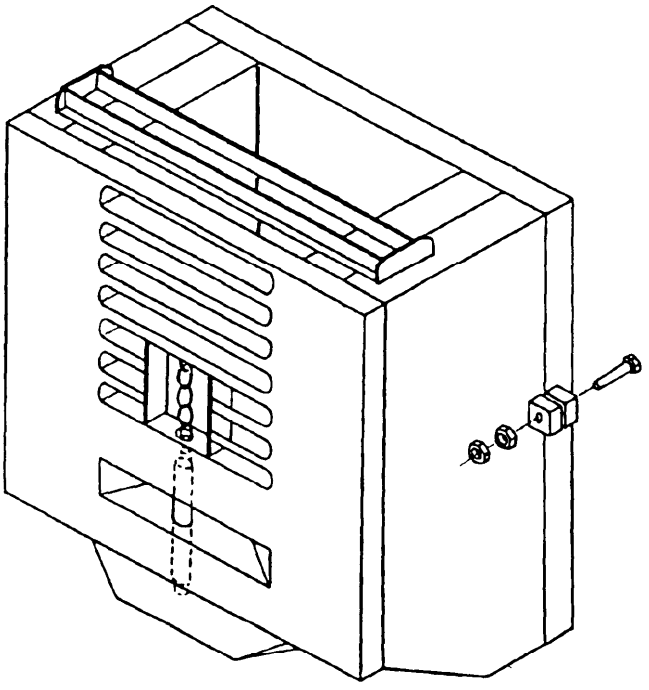

Figure 8-9.—Counterweight.

ATTACHMENTS

Attachments give forklifts versatility that allow them to do more work efficiently; however, you must remember that the attachment may reduce the capacity of the forklift by changing the center of gravity of the load.

Fork Extensions

Forklift extensions that are known by the term **tine (fork) extender** are designed in two configurations: bare tine extender (fig. 8-10) and rollerized tine extenders (fig. 8-11).

An extender provides additional length to the forklift tines that permits an easier way to load tractor-trailers and Air Force 463-L pallets. The extender moves the center of gravity of the load, and this restricts the weight that can be lifted. You must remember these restrictions when using the extensions to handle large or bulky loads. The lift-king forklift has a set of roller tine extensions assigned as an attachment. The roller tines are used when handling 463-L pallets.

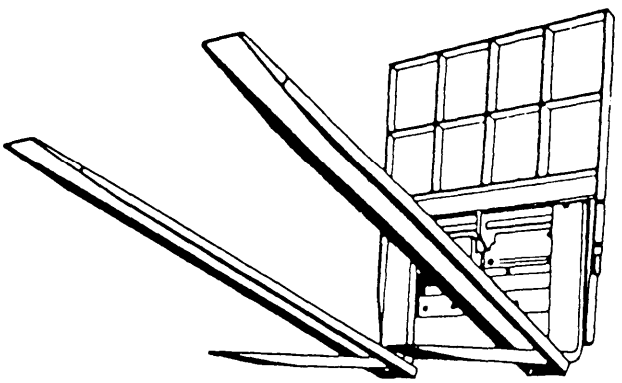

Figure 8-10.—Bare tine extender.

Crane Boom Attachment

The crane boom attachment converts the forklift to a mobile crane jib capable of handling bulky, irregularly shaped objects and is a valuable aid in maintenance work (fig. 8-12). The crane boom is raised or lowered with the standard lift mechanism.

Drum-Handling Attachment

A drum-handling attachment can handle filled 55-gallon drums by means of a forklift truck. Three types of drum-handling attachments are shown in figure 8-13.

The first consists of a series of specially shaped and spaced forks that cradle the drums to be handled (fig. 8-13, view A). This attachment handles three filled drums at one time.

The second type is mounted on the forks of the forklift and consists of side rails from which specially designed hooks are suspended at the front and rear (fig. 8-13, view B). The attachment is lowered over the drums until the hooks drop into position over the drum rims. This attachment can handle two filled drums at one time.

The third type is vertically operated and handles one filled drum at one time (fig. 8-13, view C).

PRINCIPLES OF OPERATION

Forklifts operate on the simple principle of a fulcrum or like a playground teeter-totter. A unit load

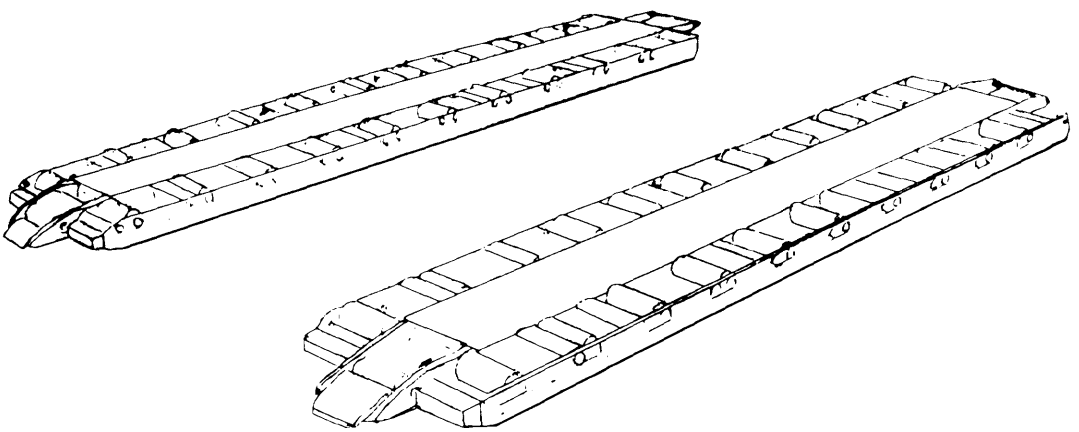

Figure 8-11.—Rollerized tine extenders.

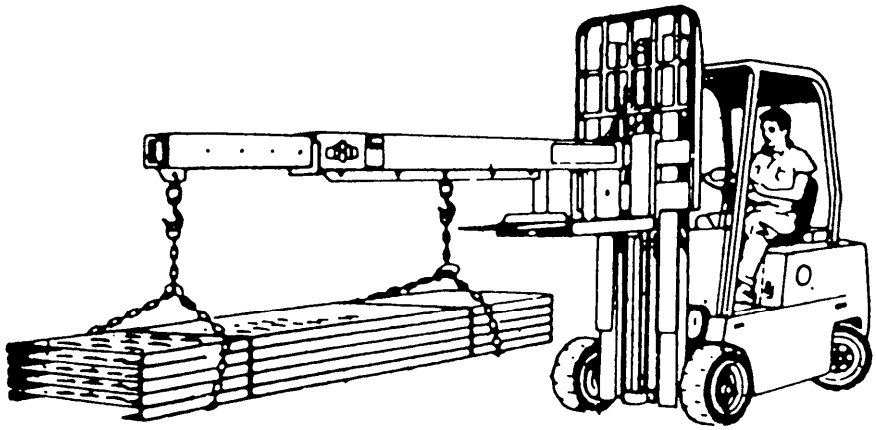

Figure 8-12.—Crane boom attached to the forklift.

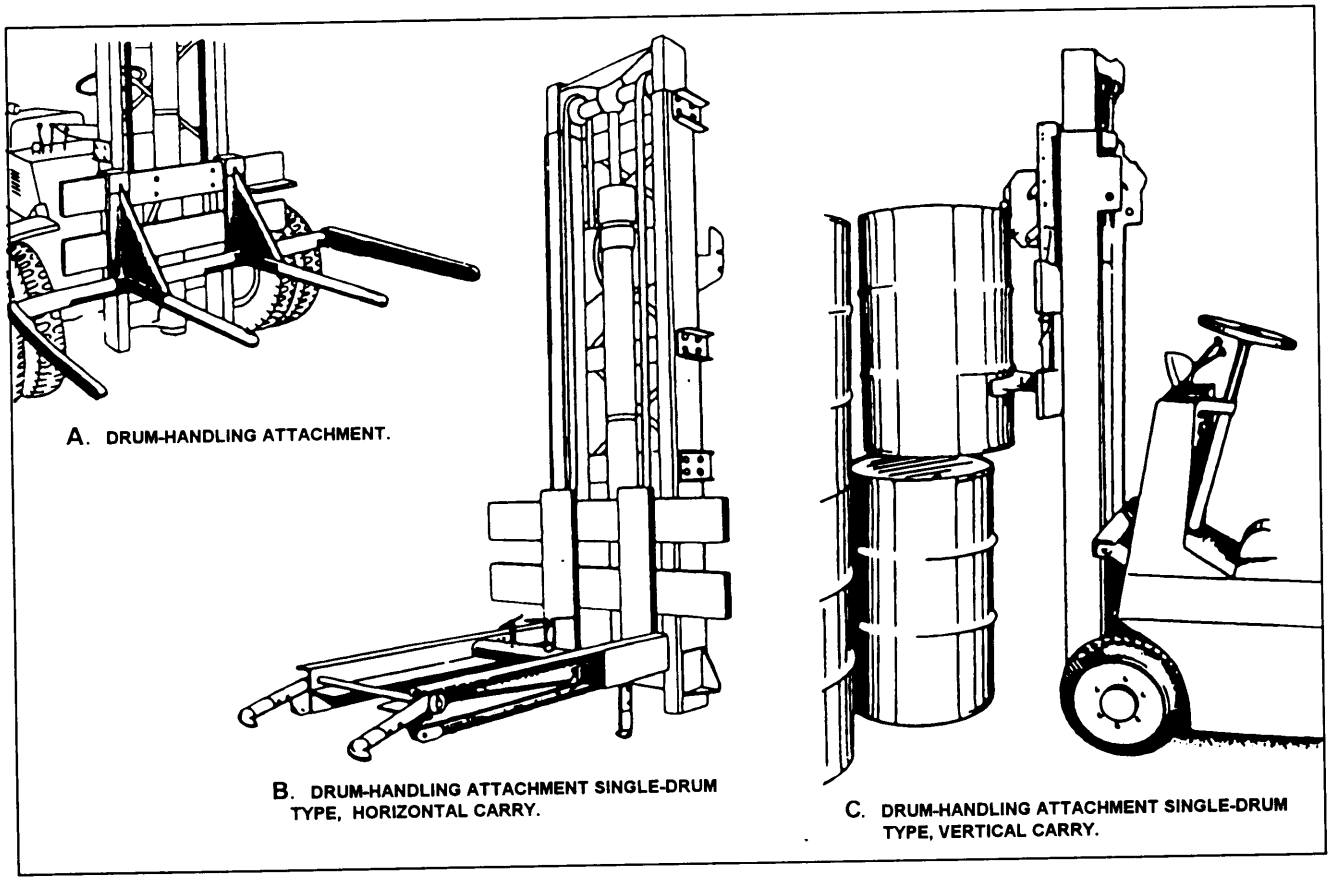

Figure 8-13.—Drum-handllng attachments.

on the forks must be counterbalanced by the counterweight and weight of the forklift. The fulcrum, or pivot, is the drive axle.

A forklift must be physically small and compact to work in confined areas, such as boxcars, container vans, and narrow aisles. Additionally, the forklift must offer enough working space for both the operator and maintenance personnel. It must handle maximum loads and stack them safely and still have an upright, minimum load, and collapsed height to maneuver in

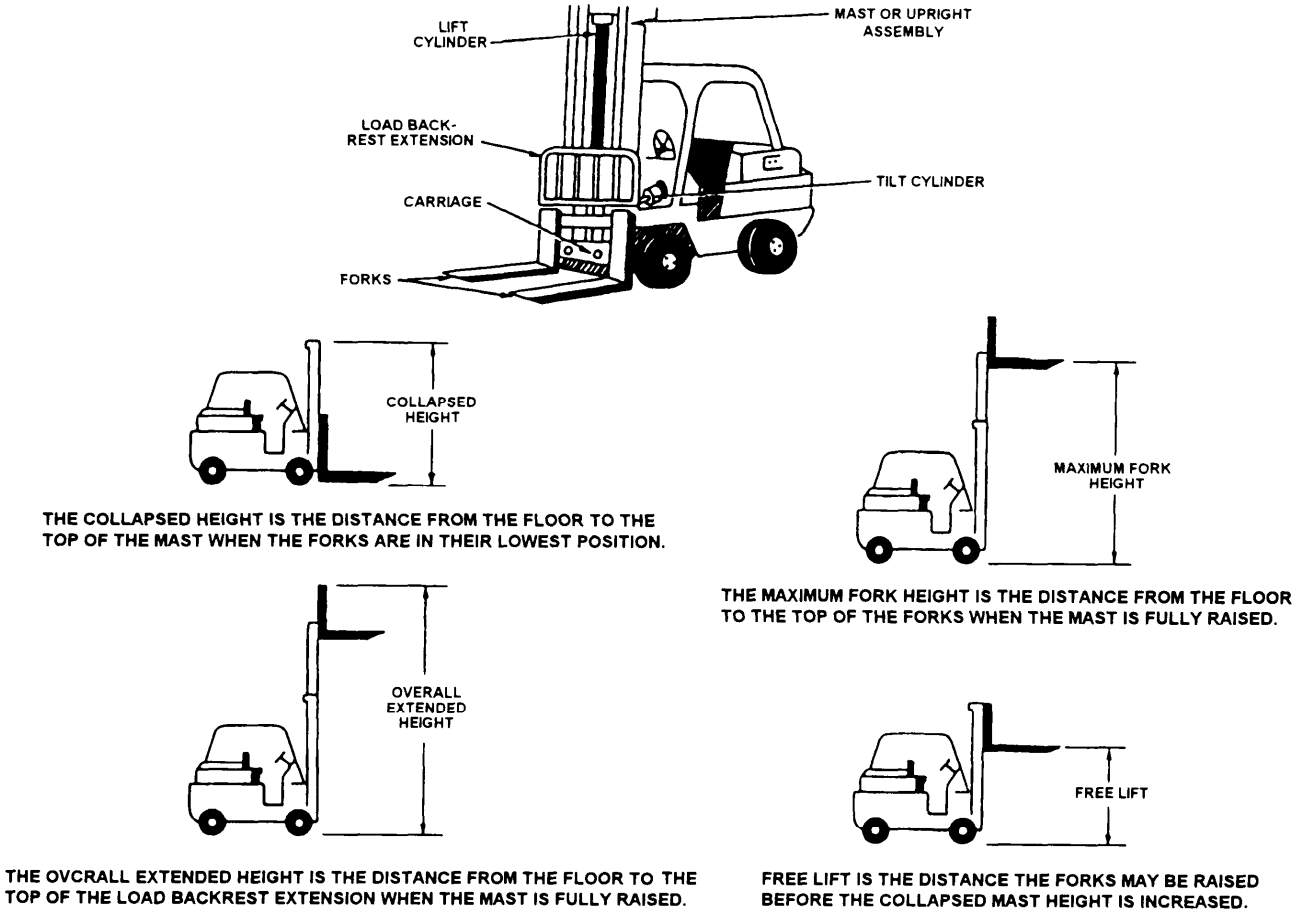

Figure 8-14.—Technical terms used in forklift operations.

areas with low-overhead clearance. It must be able to negotiate inclines, either empty or loaded. Technical terms associated with forklift operations are explained in figure 8-14.

CAPABILITIES AND LIMITS

The safe and efficient use of a forklift requires skill and alertness horn the operator. For the majority of materials-handling operations, the forklift excels, because it is self-propelled and requires only the operator to control the lifting, transporting, stacking, and unstacking. To develop the skill required for safe and efficient forklift operations, you must have an understanding of the makeup, capabilities, and limitations of the forklift, and see that it is maintained in good mechanical condition.

In the selection of a forklift, consider the performance, lift height, power, and capacity; also consider the available space and area the forklift must operate in.

NOTE: For complete information on the capabilities of your forklift, refer to the operator's manual provided by the manufacturer.

Lift Height

Forklifts are available in standard models that have lift heights of up to 210 inches. The lift height of a forklift selected for an operation depends on how high the material is stored and the overall height of the forklift, with the mast lowered, that must clear door casings, overhead obstructions, and other building limitations. Also, there are restrictions and limitations on lift height during unloading and loading of cargo vessels, trucks, tractor-trailers, and so forth.

Capacity

The capacity of the forklift must be equal to the task. For this reason, the weight of each load must be known before a lift is made.

The center of balance is a critical factor for capacity. On most forklifts, the **center of balance (C/B)** is under the operator's seat, as shown in figure 8-15. When a load is lifted a combined center of balance (C C/B) is created, as shown in figure 8-16. When the load is raised, the C C/B changes, as shown in figure 8-17.

A forklift is designed to lift its maximum capacity with the load centered on the forks, not with the tip of the forks.

CAUTION

Never lift a load with the load balanced on the tips of the forks.

You should know where the center of balance (C/B) is before trying to lift any load. The C/B of the load should be as far back on the forks as possible. If the C/B is on one side, as shown in figure 8-18, the load may flip off the forks and land on its side once you lift it. The C/B of the load should be placed directly in front of the C/B of the forklift, as shown in figure 8-19. Additionally, the C/B should be centered and placed as far back as possible on the forks.

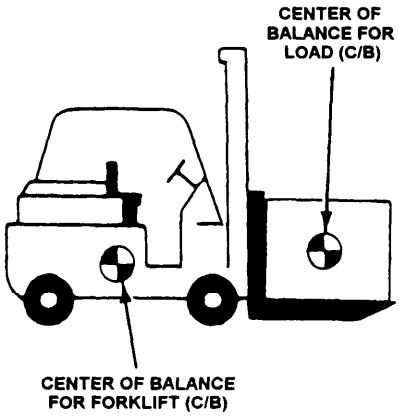

Figure 8-15.—Center of balance (C/B) for the forklift and load.

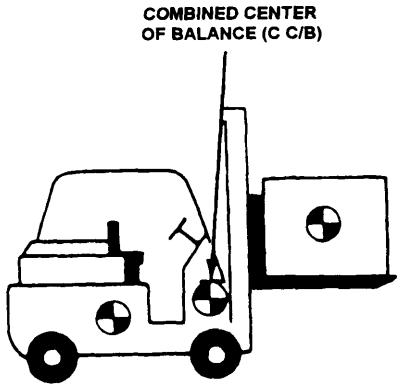

Figure 8-16.—Combined center of balance (C C/B).

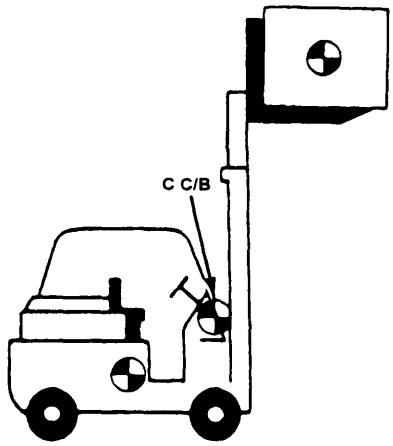

Figure 8-17.—Movement of the combined center of balance as the load is raised.

OPERATING TECHNIQUES

Before operating a forklift, you must have proper authorization and possess a thorough understanding of the operator's manual and safety precautions. If you have very little experience in operating forklifts, make sure a qualified operator guides you through at least several operating and load-handling operations before

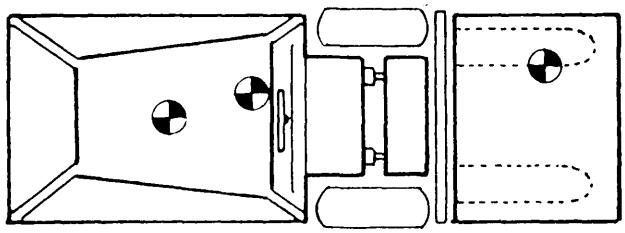

Figure 8-18.—Top view of how the combined center of balance moves with the C/B of the load.

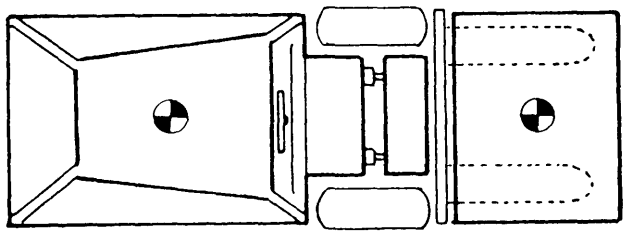

Figure 8-19.—How the C/B of the load should be centered

attempting to operate the forklift on your own. Basic education in safe operation and load-handling techniques is absolutely necessary to prepare you for proper operation and enables you to anticipate the unexpected.

NOTE: A forklift is only as safe as its operator. Only authorized, properly trained licensed personnel are permitted to operate it.

Pallets and Boxes

Most of the loads that you will handle are on pallets or in boxes. A standard pallet is 40 inches by 48 inches, as shown in figure 8-20. Mount-out boxes are in all different sizes; however, they have stringers like pallets.

LIFTING.— The technique for lifting a pallet is as follows:

1. Position the forklift squarely in front of the load and raise the forks to the proper level, halfway between the top and bottom boards of the pallet.

2. Slowly insert the forks into the pallet until the load rests against the fork faces. If the mast is not in a vertical position, the forks may hang up in the pallet when they are inserted.

NOTE: If the pallet or load is against a wall or obstruction and the forks are longer than the pallet, you will have to pick up the pallet and back up the forklift until there is enough room to reposition the forks entirely under the pallet.

3. Lift the load just enough to clear the floor (or stack beneath the load being removed). Then tilt the mast or forks back enough to cradle the load. The load should always be carried as low as possible for maximum stability and vision.

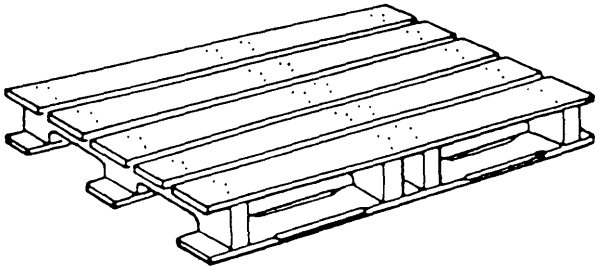

Figure 8-20.—40– by 48-inch pallet.

WARNING

Overloading a forklift is strictly prohibited. The forklift can safely lift and carry no more than its rated capacity. Among the dangers of overloading are injury to the operator, damage to the cargo, and damage to the pump and lift mechanism. Additionally, overloading causes wear on the tires, engine, or electric motor. Also, a forklift will tip forward if the load on the forks exceeds the lift capacity of the forklift. The manufacturer has established the forklift rating (expressed in pounds of load on the fork) and the allowable distance in inches from the heel of the forks to the center of gravity of the load. This distance is known as the **load center.**

CARRYING.— Carrying material with a forklift to move it from one location to another requires skill and concentration. The techniques for carrying loads with a forklift are as follows:

1. Tilt the mast as far back as the load will permit when carrying a load, and raise the load only high enough to clear obstructions. Always change speed gradually, as sudden starts and stops will cause the load to shift. Gradual starts and stops also prevent rapid wear of equipment components.

2. Always know the ground clearance of your forklift truck and the surface you are traveling on.

NOTE: If the load is so bulky that your vision is obstructed, drive in reverse. Extra care must be taken when driving in reverse, because the operator does not have a constant view of the load; therefore, a backing guide is usually needed.

3. You should ascend and descend a grade with the load pointing upgrade when operating a loaded forklift on an incline (fig. 8-21). Normally, direction of travel should be determined by what direction the operator can see best. This is why forklifts are built with reverse as well as forward travel. But, on grades of 10 percent or more, both forklift and load stability demand that the load be kept upgrade.

4. Handle each load within the rated capacity of the forklift. The **rated capacity** is the weight the forklift can handle safely. The forklift data plate rating indicates the maximum safe load that can be lifted. This maximum rating should never be exceeded; however, there are conditions requiring a load <u>less</u> than the rated capacity. The data plate rating does apply for weak

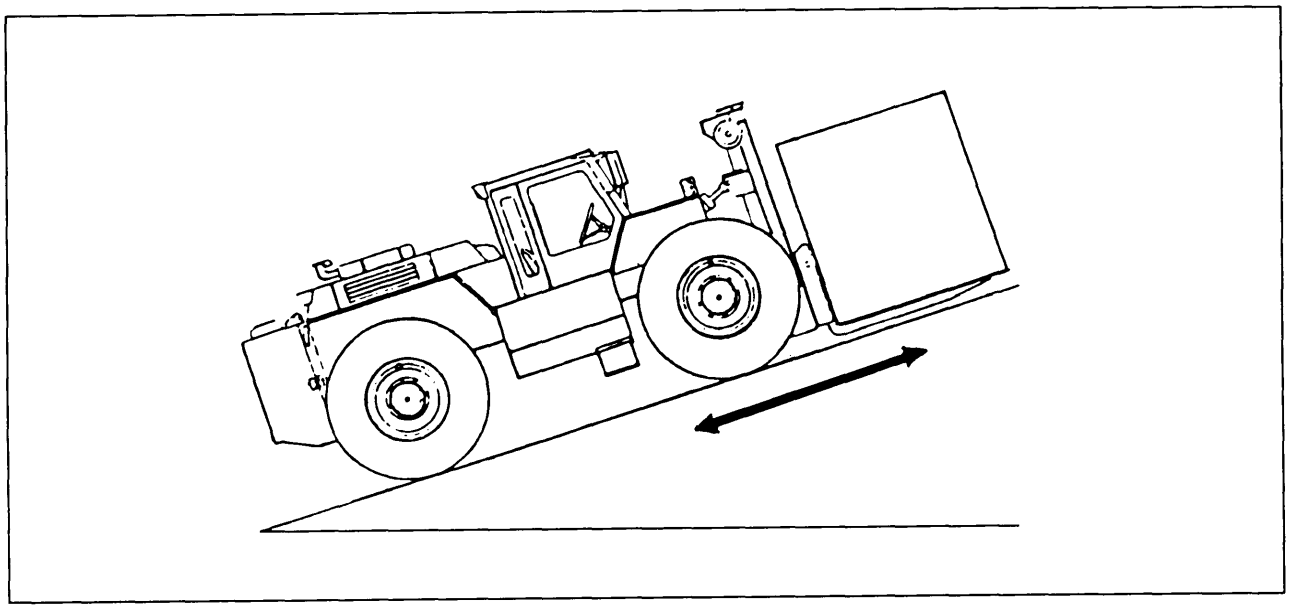

Figure 8-21.—Direction of travel on a grade.

floors, uneven terrain, special load-handling attachments, or loads with a high center of gravity. Under these conditions, the safe working load is well below the rated capacity. Under special conditions, you must reduce your load so your forklift will remain stable.

5. Handle only stable loads. Many loads are made up of unstable items that can be easily dislodged. This rule is critical to your safety when the forklift is not equipped with an overhead guard or roll over protection structure (ROPS).

6. Center the weight of wide loads between the forks; otherwise, the load may topple off the forks when you turn a corner or hit a bump.

7. Watch "swing" when handling long loads. Failure to watch clearance at the ends of your load can cause you to strike persons or objects.

8. Keep the load against the carriage by maintaining a slight backward tilt.

9. Do not travel with the load raised higher than 6 inches from the floor until you are ready to deposit the load. When loads are carried in an elevated position, the stability of the forklift is reduced. The load or part of it can fall on someone or something.

10. Drive carefully, observe traffic rules, and be in full control of the forklift at all times.

POSITIONING.— When loading and stacking material, move the forklift truck forward until the load arms are entirely under the load to be lifted. Ensure the load is centered on the arms and that it is well-seated against the face of the lifting carriage. When picking up round objects, first tilt the uprights so the forks slide along the floor or ground under the object to be lifted, as shown in figure 8-22. Then decelerate, tilt backwark, and accelerate until there is enough backward tilt of the mast to allow safe handling of the load.

NOTE: Lifting speed is controlled by the speed of the engine and the extent the control lever is pulled. Engine speed has no effect on lowering speed.

Never race the engine while hoisting a load. Too much engine speed will not increase the speed of the hoisting mechanism but may result in fast wear and possible damage to the engine. From practice and experience, you will be able to determine the best hoisting speed by sound, sight, and feel. When a load has been raised to the desired height, ease the hoist lever to the neutral position and move the forklift to the base of the stack the load is to be placed.

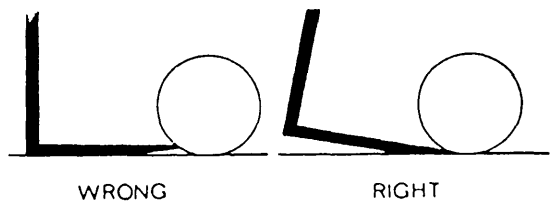

Figure 8-22.—Tilt position for picking up round objects.

Although a load maybe placed on or removed from a stack by using the hoist lever, you will learn from practice that a load can be placed or removed entirely with the tilting mechanism. The tilting mechanism is designed to raise the load arms slightly, as the mast is tilted backwards.

Practice raising the load while the forklift draws near the stack to reduce strain on the engine and the brakes. Study the problem of load handling, and keep in mind that carefully planned operations produce the most work with the least fatigue to yourself.

Lift and lower with the mast vertical or tilted slightly back. Tilt elevated loads forward only when they are directly over the unloading place. If the load or lifting mechanism is raised to pick up or deposit a load, reduce the tilt in either direction. Remember the side stability of the load and do not tilt back any farther than is necessary.

CAUTION

Under no condition should additional counterweights be added to any materials-handling equipment to increase its stability or lifting capacity.

Long Objects

As a forklift operator, you may be tasked to move lumber, steel, piling, or pipe. You must know where the center of balance (C/B) is to move long loads. Moving long objects takes special forklift operator skills.

CARRYING.— The load on the forklift shown in figure 8-23 is too wide for the door of the warehouse. In this case, the techniques of operation shown in figure 8-24 should be followed so the forklift and long load can be maneuvered through the door. With practice, this technique can be used to maneuver around most obstacles.

POSITIONING.— The positioning of long objects for loading can be a problem, and it is best to place dunnage under the object if it is not on a pallet. The thickness of the dunnage should allow the forks to slide out freely from the load. To load a piece of pipe, piling, or anything round, you must place blocking or dunnage to prevent the round object from rolling. Then tilt the forks forward until they are flat on the floor and slide them from underneath the object.

FORKLIFT SAFETY

Safety is a vital part of forklift operations. Many forklift safety practices are as simple and clear as those for driving the family automobile. For instance, before you start your car, you check to see if the transmission is in NEUTRAL or PARK. When stopping your car, you do so gradually, not abruptly. Because a forklift is a special machine designed for a different purpose, you must exercise more caution and receive more training to operate a forklift properly.

The techniques for safe forklift operations are as follows:

1. Avoid lifting or hitting anything that is likely to fall on you or other personnel in the area. Remember that a forklift equipped with an overhead guard or ROPS

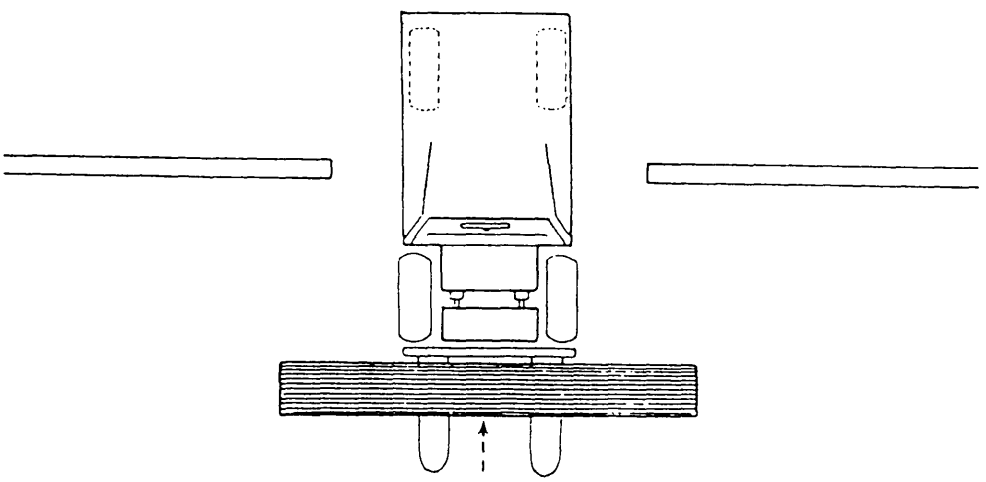

Figure 8-23.—Load too wide to maneuver through a warehouse door.

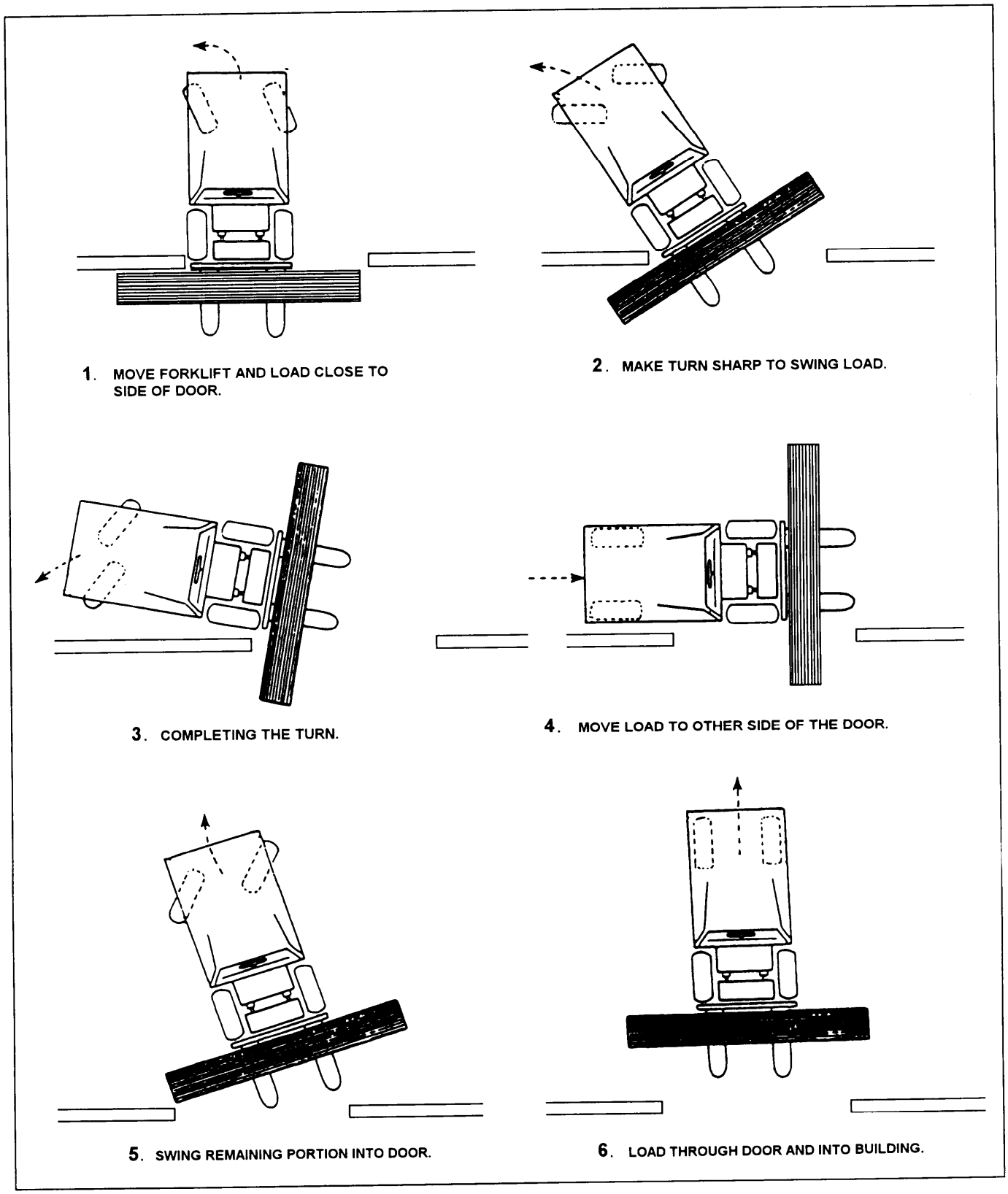

Figure 8-24.—Technique of maneuvering a wide load through a warehouse door.

and load backrest extension provides reasonable protection against a falling object but cannot protect you against every impact. A forklift without an overhead guard provides no protection. For this reason, you should never attempt to pickup any loose, unstable, or stacked load if it appears that any part of the elevated load might topple through or over the top of the upright or fall on anybody standing nearby. You should also avoid hitting certain objects, such as stacked material, that could become dislodged and fall. Do not move your forklift around with the load carriage elevated. These rules apply whether or not your forklift is equipped with an overhead guard and are important if you are not protected by an overhead guard. Enforcing these rules may mean a smaller load, but you are protecting yourself and others working in your area.

2. Use a secured safety platform when lifting personnel. A forklift is built for only one rider—the operator. Because of the hazardous conditions that can result, it is unauthorized for anyone to ride the forks of a forklift or hitch a ride in any manner. If a forklift is used to elevate workers, a safety platform must be secured to the forks. The platform should be specially built and secured to keep it from slipping from the forks, and it should have a solid floor and handrail (fig. 8-25).

3. Keep arms and legs inside the operator's compartment. Holding them outside the machine can be dangerous in narrow aisles.

4. Keep yourself and all others clear of the hoisting mechanisms. NEVER PUT HANDS, ARMS, HEAD, OR LEGS THROUGH THE HOISTING MECHANISM. This rule applies to both you and the rigger. A rigger should not be near the load or hoisting mechanism while you are attempting to pick up, hoist, or deposit a load.

5. Never allow anyone under the load.

6. Report damaged or faulty equipment immediately—do not operate a forklift that is unsafe. You can complete a job with a forklift safely only when it is working correctly; therefore, a forklift should never be operated when it is not running properly.

7. Avoid bumps, holes, slick spots, and loose materials that may cause your forklift to swerve or tip over. Different models of forklifts are designed to operate under different conditions. Although large forklifts can adapt to more uneven ground, do not expect them to maintain their balance under abusive ground conditions. Try to pick the smoothest areas when moving material from one place to another.

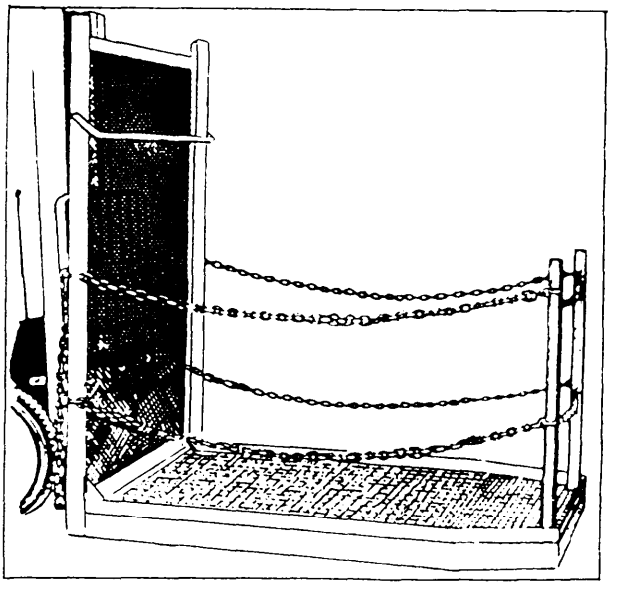

Figure 8-25.—Safety platform.

8. Travel slowly in narrow aisles and around corners, especially blind corners. To help avoid collisions, you should sound your horn in advance.

9. Lower the carriage completely, and set the parking brake before leaving your forklift. Block the wheels when parking on an incline or working on the forklift. These rules apply under all conditions, even if you are only going to leave your forklift for a moment. A driverless forklift does not have to move far in close quarters to cause serious injury.

10. Do not turn on an incline. For stability, a forklift should not be driven along the side of an incline that leans the forklift sideways. Always keep either the rear end or front end of the forklift pointed up or down the slope.

11. Do not fill the fuel tank while the engine is running.

12. Sudden starts and stops cause premature wear on parts of the forklift, such as axles and gears, and cause tires to wear faster. Personnel nearby may become injured and materials may be damaged by a forklift suddenly going into motion or going out of control.

13. Because a forklift is designed to perform so many functions within a small space, you must anticipate certain clearance situations. As an operator, you must be aware the forks will sometimes protrude beyond the front of the load. Because of this, you may

strike objects or lift or nudge other loads on pallets. Many serious mishaps have been caused by uprights and overhead guards striking pipes and beams connected to the ceiling in a warehouse. Some forklift models steer from the rear axle. On these machines, the tail swings and can hurt personnel or damage property.

CAUTION

FAILURE TO KEEP A CAREFUL WATCH IN THE DIRECTION OF TRAVEL CAN RESULT IN DAMAGE TO SOMETHING OR INJURY TO SOMEONE.