CHAPTER 1

ENGINE SYSTEMS

To become a professional Equipment Operator, you must understand the principles of operation of automotive and construction equipment. This chapter covers the basic principles of engines, fuel systems, air induction systems, lubrication systems, and cooling systems on the equipment used by the Navy and the Naval Construction Force (NCF).

INTERNAL COMBUSTION ENGINES

An engine is a device that converts heat energy into mechanical energy to perform work. An internal combustion engine is any engine in which fuel is burned within its body (fig. 1-1). The combustion that occurs within the cylinders produces energy. This energy moves the parts of the engine that drives the equipment.

Air and fuel are two elements needed to produce heat energy in an engine. Oxygen in the air is evenly mixed with the fuel and is vaporized. This mixture allows for quick and even burning. The chemical process that occurs when the air and fuel mixture in the cylinder is ignited is known as combustion.

An engine uses both reciprocating motion and rotary motion to transmit energy. Four parts of the engine work together to convert reciprocating motion into rotary motion. These four parts are as follows: a cylinder, a piston, a connecting rod, and a crankshaft (fig. 1-2). The piston and cylinder are matched parts, fitted closely to allow the piston to glide easily with little clearance at the sides within the cylinder. The top of the cylinder is closed and has a space for the combustion chamber. The connecting rod transmits the up-and-down motion of the piston to the crankshaft. The crankshaft

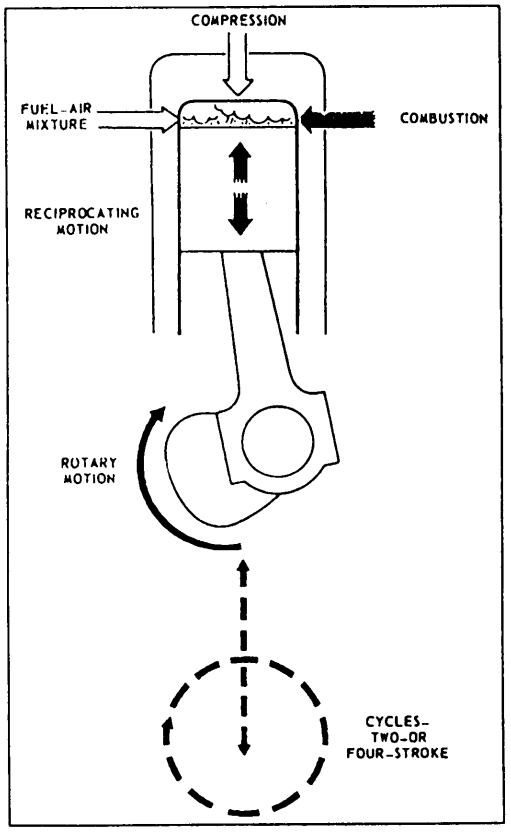

Figure 1-1.-Basic elements of an engine.

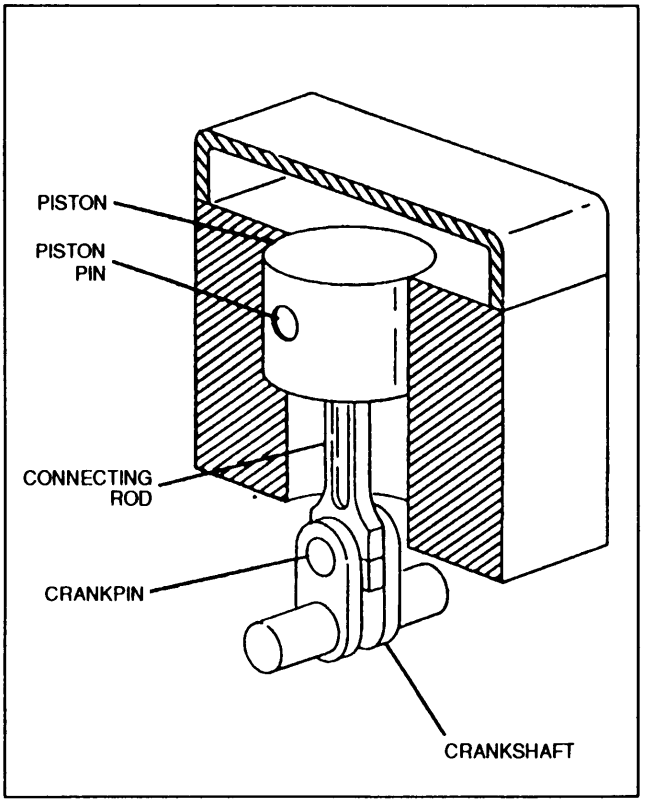

Figure 1-2.-Piston and crankshaft.

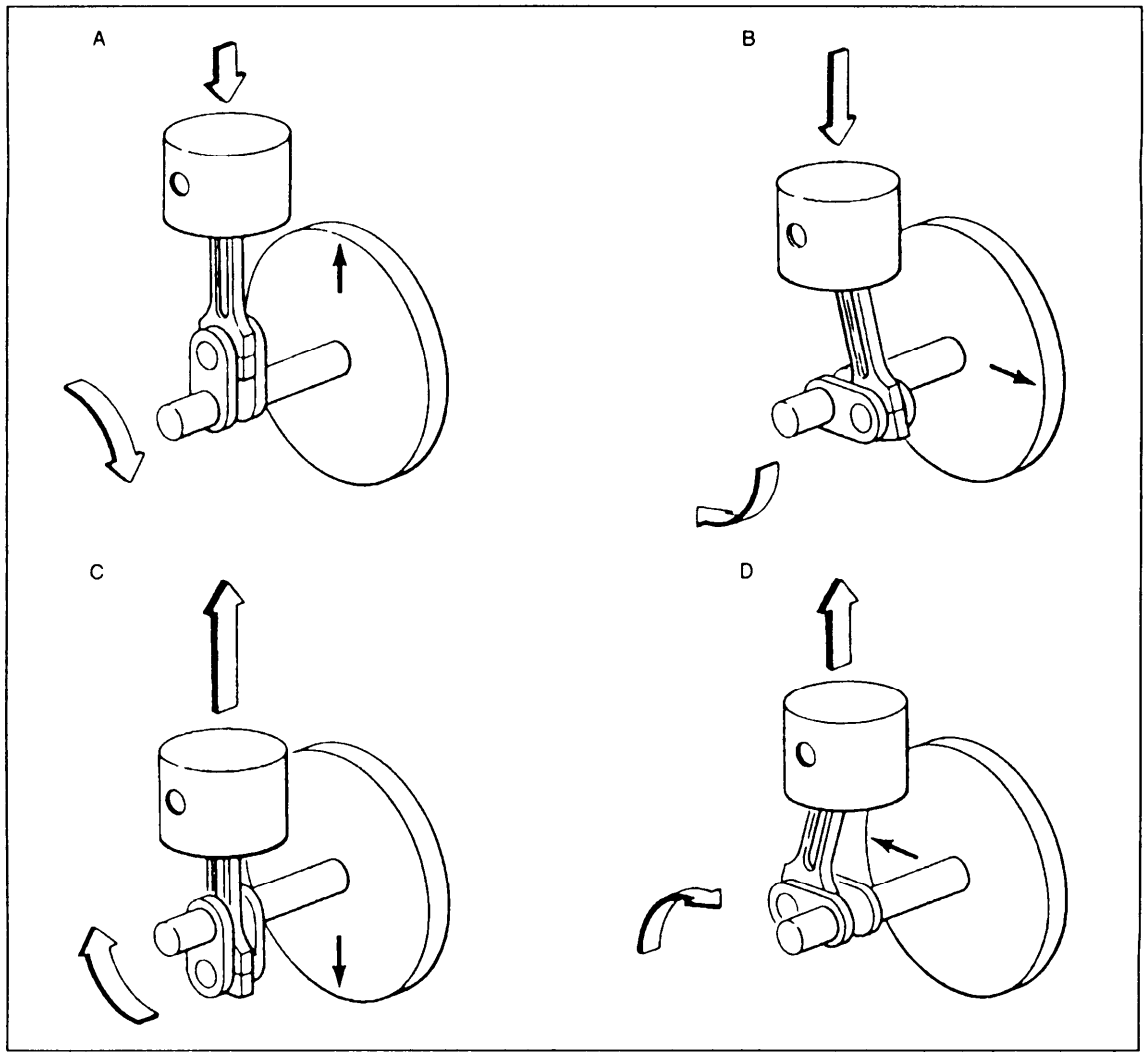

Figure 1-3.—Piston to crankshaft relationship.

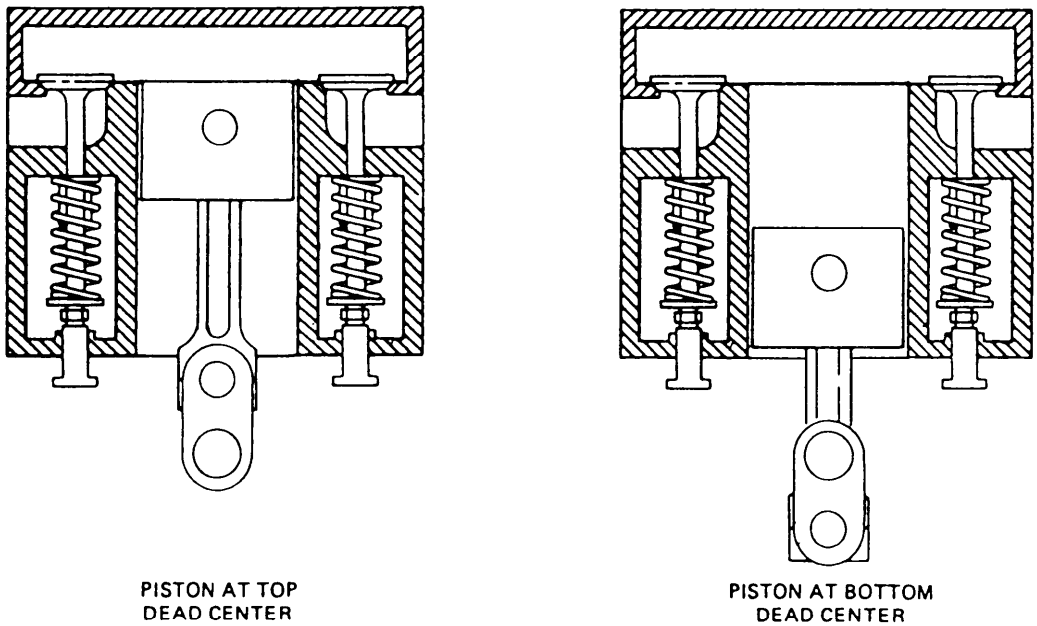

Figure 1-4.—Piston positions.

has a section offset from the center line of the shaft so that it "cranks" when the shaft is turned (fig. 1-3).

ENGINE CYCLE

When the piston is at the highest point in the cylinder, it is in a position called top dead center (TDC). When the piston is at its lowest point in the cylinder, it is in a position called bottom dead center (BDC) (fig. 1-4). As the piston moves from top to bottom or from bottom to top, the crankshaft rotates exactly one half of a revolution. Each movement of the piston from top to bottom or from bottom to top is called a stroke; therefore, the piston completes two strokes for every full crankshaft revolution.

For an engine to operate, the following sequence of events must occur:

1. **INTAKE:** A combustible mixture is pulled into the cylinder.

2. **COMPRESSION:** The combustible mixture is compressed into a smaller space.

3. **POWER:** The compressed combustible mixture is ignited causing it to expand, producing power.

4. **EXHAUST:** The burnt gases are removed from the cylinder.

The engine repeats this sequence of events over and over again to produce sustained power. One complete series of these events in an engine is called a cycle. Engines have either a four-stroke cycle or a two-stroke cycle; most engines operate on the four-stroke cycle.

Four-Stroke Cycle Gasoline Engine

In the four-stroke cycle gasoline engine, there are four strokes of the piston in each cycle: two up and two down (fig. 1-5). The four strokes of a cycle are as

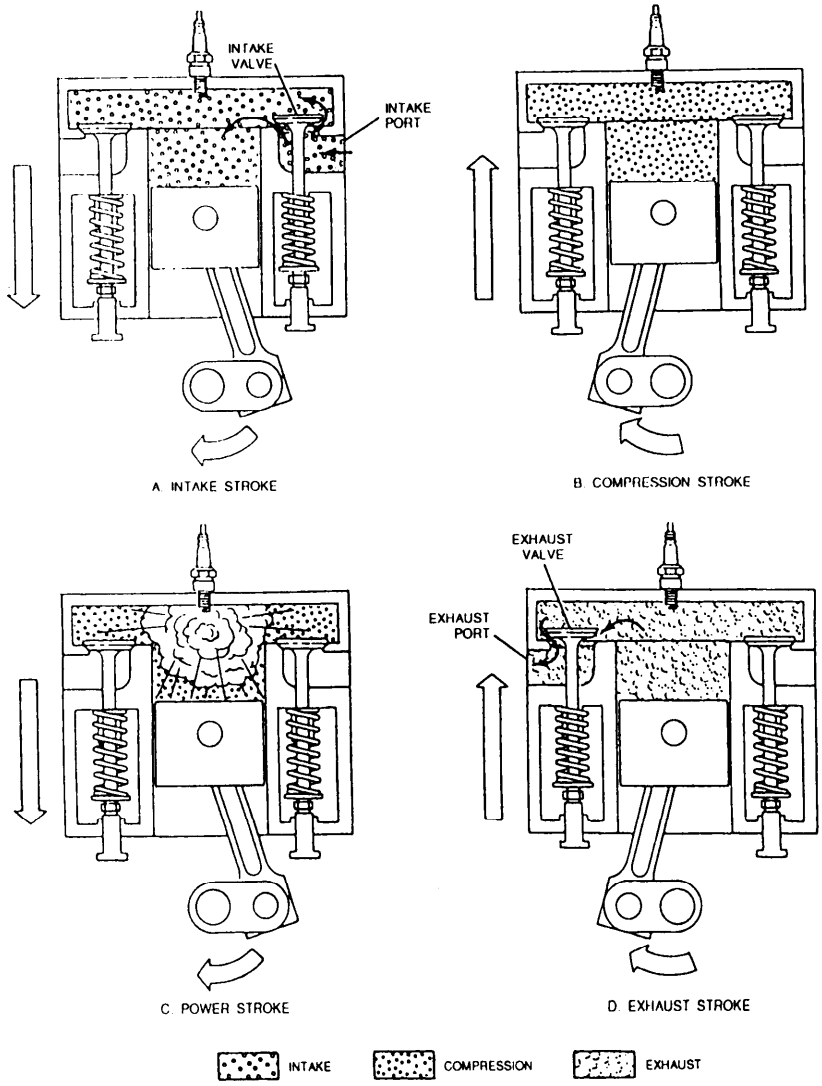

Figure 1-5.—Four-stroke cycle operation.

follows: intake, compression, power, and exhaust. A cycle occurs during two revolutions of the crankshaft.

INTAKE STROKE. — The intake stroke begins at top dead center, and as the piston moves down, the intake valve opens. The downward movement of the piston creates a vacuum in the cylinder, causing a fuel and air mixture to be drawn through the intake port into the combustion chamber. As the piston reaches bottom dead center, the intake valve closes.

COMPRESSION STROKE.— The compression stroke begins with the piston at bottom dead center and rising up to compress the fuel and air mixture. Since both the intake and exhaust valves are closed, there is no escape for the fuel and air mixture, and it is compressed to a fraction of its original volume. At this point, the fuel and air mixture is ignited.

POWER STROKE.— The power stroke begins when the fuel and air mixture is ignited, burns and expands and forces the piston down. The valves remain closed so that all the force is exerted on the piston. The power stroke ends as the piston reaches bottom dead center.

EXHAUST STROKE.— The exhaust stroke begins when the piston nears the end of the power stroke and the exhaust valve is opened. As the piston moves upward towards top dead center, it pushes the burnt gases, resulting from the ignition of the fuel and air mixture, out of the combustion chamber and through the exhaust port. As the piston reaches top dead center, ending the exhaust stroke, the exhaust valve closes, and the intake valve opens to begin the intake stroke for the next cycle.

Four-Stroke Cycle Diesel Engine

The four-stroke diesel engine is similar to the four-stroke gasoline engine. They both follow an operating cycle that consist of intake, compression, power, and exhaust strokes. They also share similar systems for intake and exhaust valves. The components of a diesel engine are shown in figure 1-6.

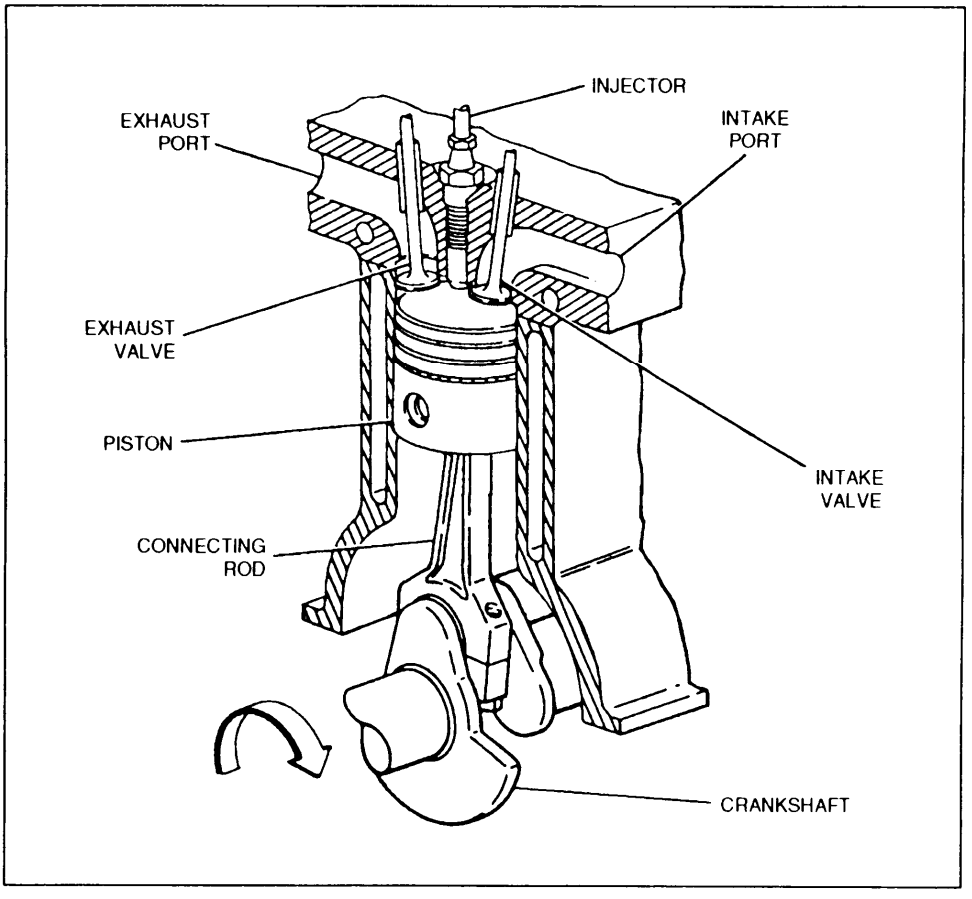

Figure 1-6.—Four-stroke cycle diesel engine.

The primary differences between a diesel engine and a gasoline engine are as follows:

1. The fuel and air mixture is ignited by the heat generated by the compression stroke in a diesel engine versus the use of a spark ignition system on a gasoline engine.

2. The fuel and air mixture in a diesel engine is compressed to about one twentieth of its original volume, while in a gasoline engine the fuel and air mixture is only compressed to about one eighth of its original volume. The diesel engine must compress the mixture more tightly to generate enough heat to ignite the fuel and air mixture. The contrast between the two engines is shown in figure 1-7.

3. The gasoline engine mixes the fuel and air before it reaches the combustion chamber. A diesel engine takes in only air through the intake port. Fuel is put into the combustion chamber directly through an

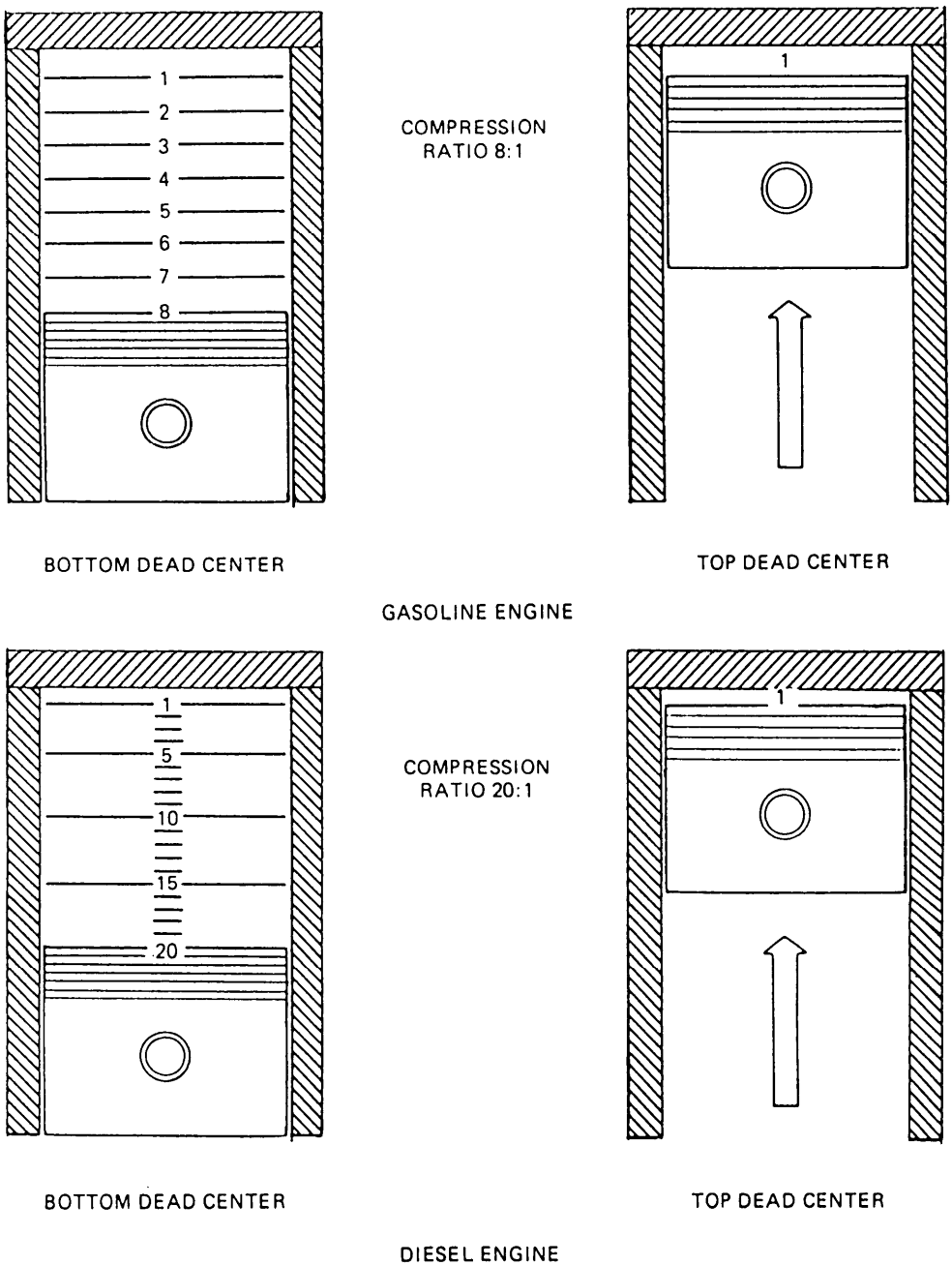

Figure 1-7.—Diesel and gasoline engines compression strokes.

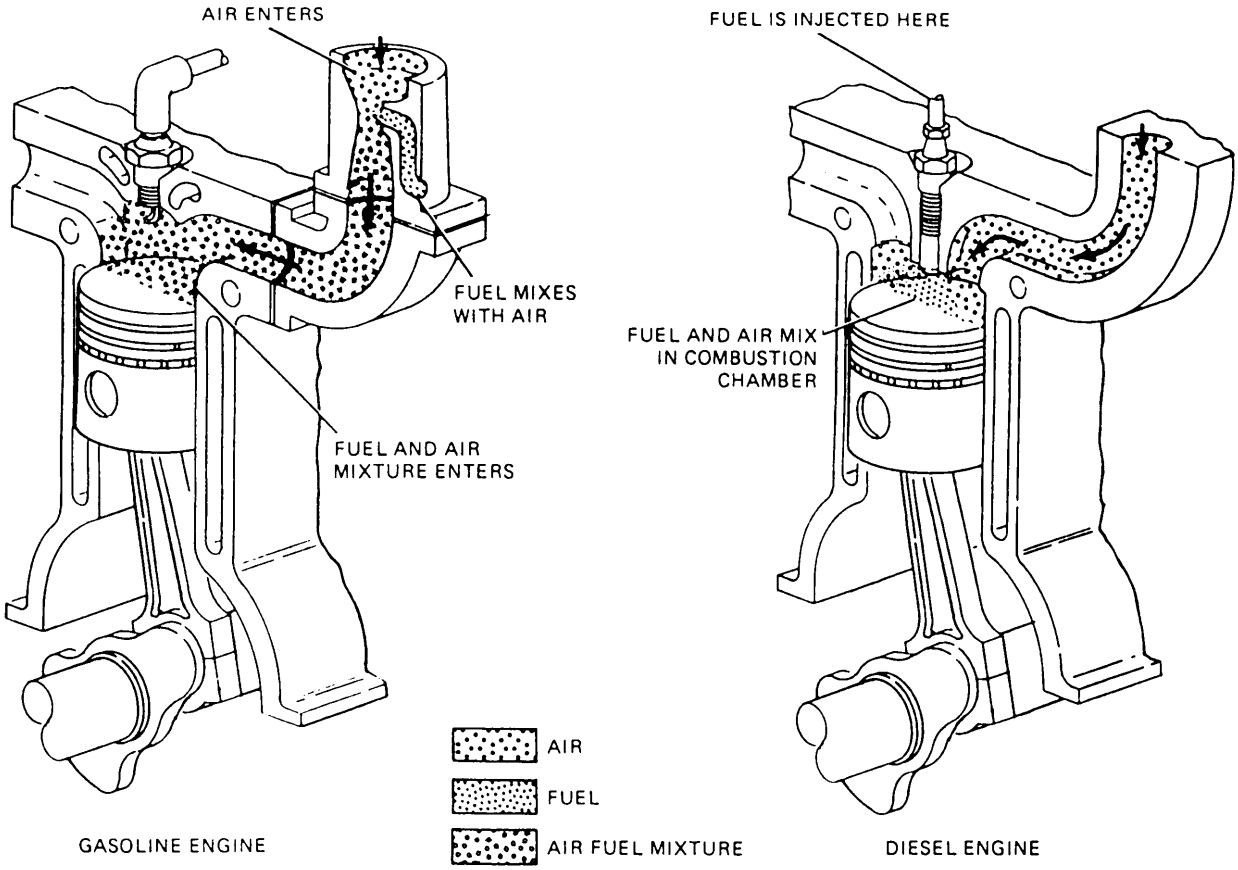

Figure 1-8.-Diesel and gasoline engines intake strokes.

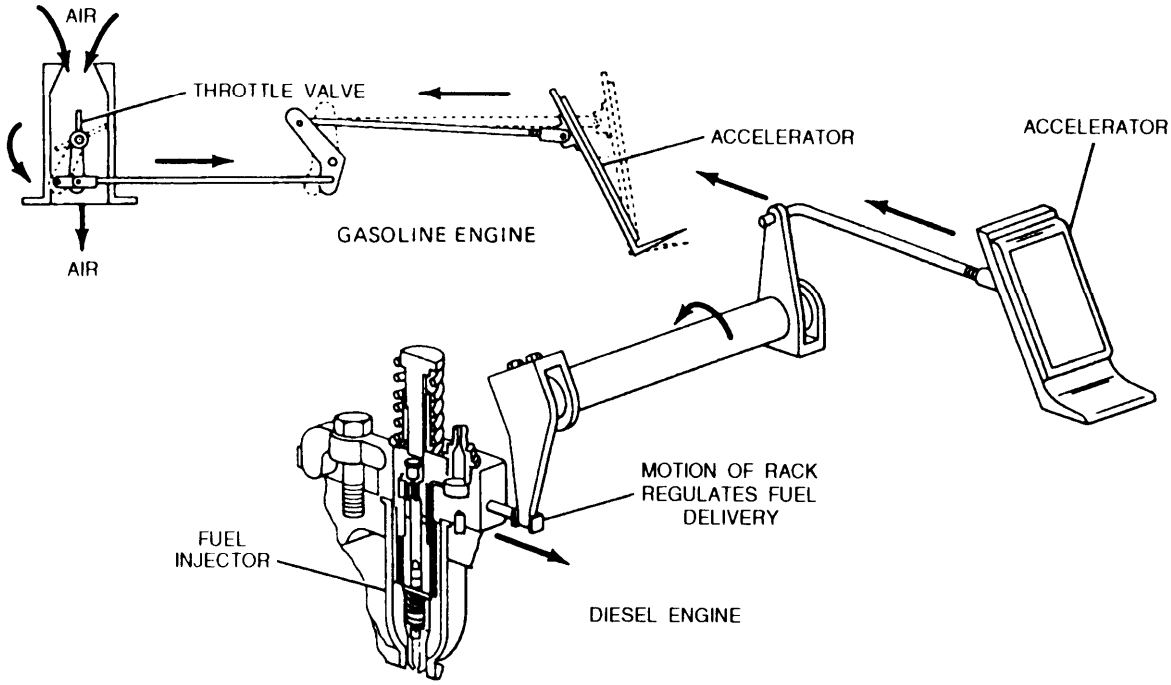

Figure 1-9.—Diesel and gasoline engines regulation of power.

injection system. The air and fuel then mix in the combustion chamber (fig. 1-8).

4. The engine speed and the power output of a diesel engine are controlled by the quantity of fuel admitted to the combustion chamber. The amount of air is constant. On the gasoline engine, the speed and power output is regulated by limiting the air and fuel mixture entering the engine (fig. 1-9).

A diesel engine is much more efficient than a gasoline engine, such as the diesel engine does not require an ignition system due to the heat generated by the higher compression, the diesel engine has a better fuel economy due to the complete burning of the fuel, and the diesel engine develops greater torque due to the power developed from the high-compression ratio.

The strokes that make up the four-stroke cycle of a diesel engine follow.

DIESEL ENGINE INTAKE STROKE.— The piston is at top dead center at the beginning of the intake stroke, and, as the piston moves downward, the intake valve opens. The downward movement of the piston draws air into the cylinder, and, as the piston reaches bottom dead center, the intake valve closes (fig. 1-10, view A).

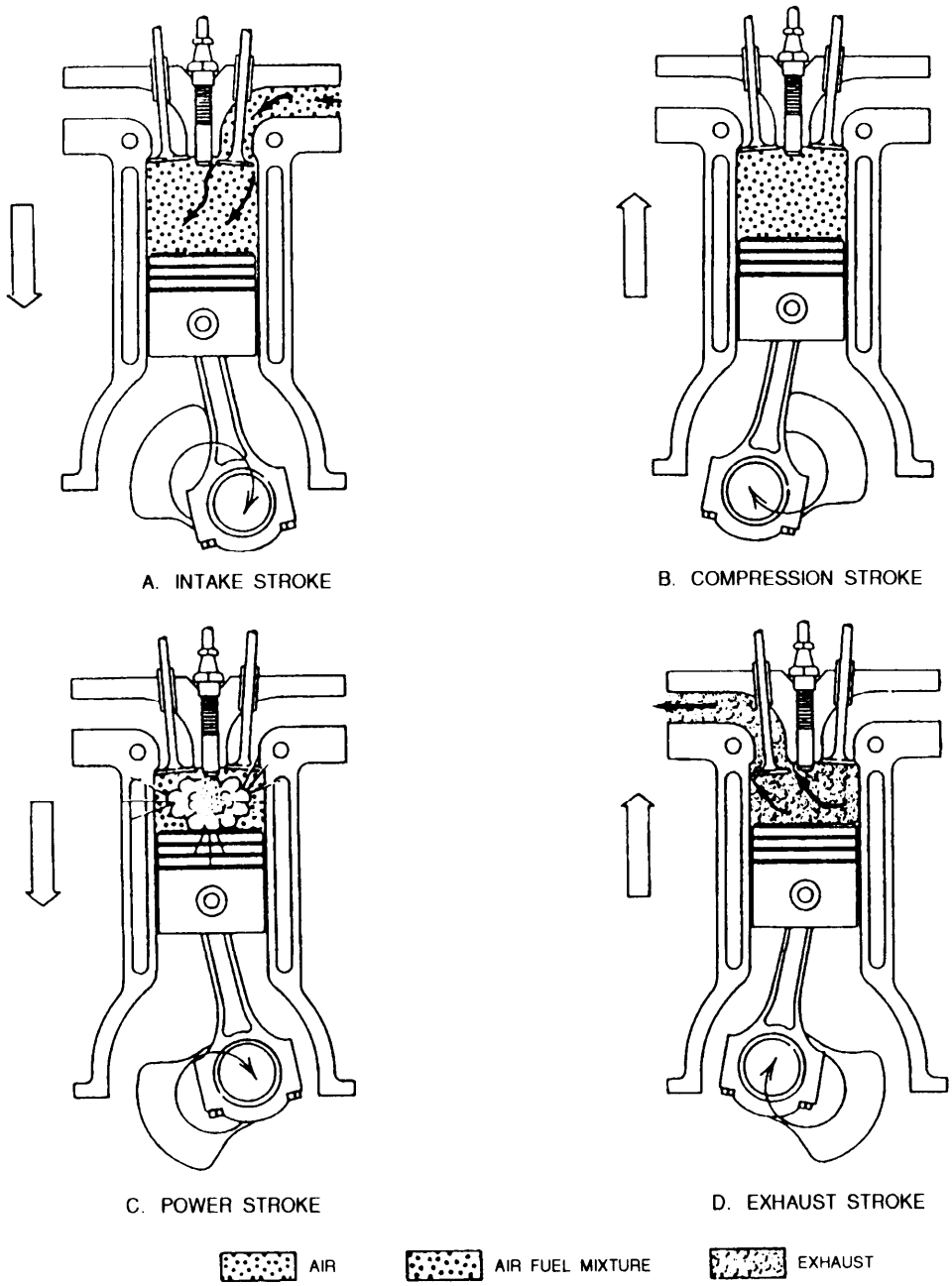

Figure 1-10.—Four-stroke cycle diesel engine.

DIESEL ENGINE COMPRESSION STROKE.— The piston is at bottom dead center at the beginning of the compression stroke, and, as the piston moves upward, the air compresses. As the piston reaches top dead center, the compression stroke ends (fig. 1-10, view B).

DIESEL ENGINE POWER STROKE.— The piston begins the power stroke at top dead center. The air is compressed to as much as 500 psi and at a compressed temperature of approximately 1000°F. At this point, fuel is injected into the combustion chamber and is ignited by the heat of the compression. This begins the power stroke. The expanding force of the burning gases pushes the piston downward, providing power to the crankshaft. The diesel fuel will continue to bum through the entire power stroke (a more complete burning of the fuel) (fig. 1-10, view C). The gasoline engine has a power stroke with rapid combustion in the beginning, but little to no combustion at the end.

DIESEL ENGINE EXHAUST STROKE.— As the piston reaches bottom dead center on the power stroke, the power stroke ends and the exhaust stroke begins (fig. 1-10, view D). The exhaust valve opens, and, as the piston rises towards top dead center, the burnt gases are pushed out through the exhaust port. As the piston reaches top dead center, the exhaust valve closes and the intake valve opens. The engine is now ready to begin another operating cycle.

Multifuel Engine

The multifuel engine (fig. 1-11) is basically a four-stroke cycle diesel engine with the capability of operating on a wide variety of fuel oils without adjustment or modification. The fuel injection system is equipped with a device called a fuel density compensator that varies the amount of fuel to keep the power output constant regardless of the type fuel being used. The multifuel engine uses a spherical combustion chamber (fig. 1-12) that aids in thorough fuel and air mixing, complete combustion, and minimizes knocks.

NOTE: Because of environmental pollution controls and the development of more efficient diesel engines, the multifuel engine is being phased out.

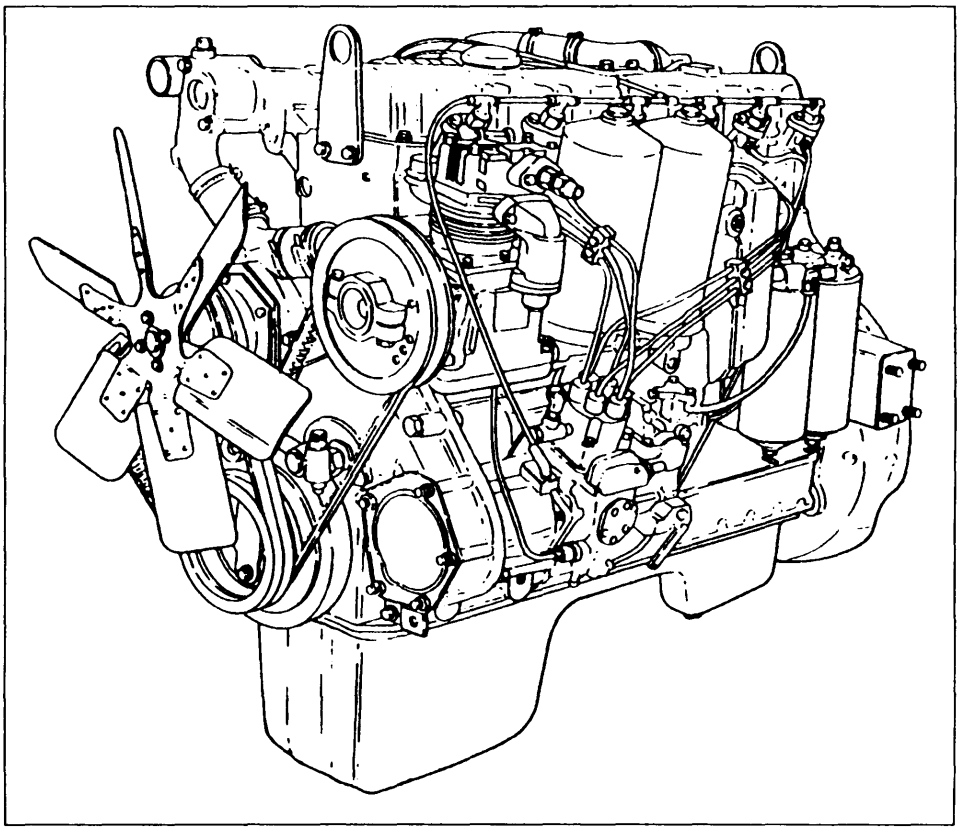

Figure 1-11.—Multifuel engine.

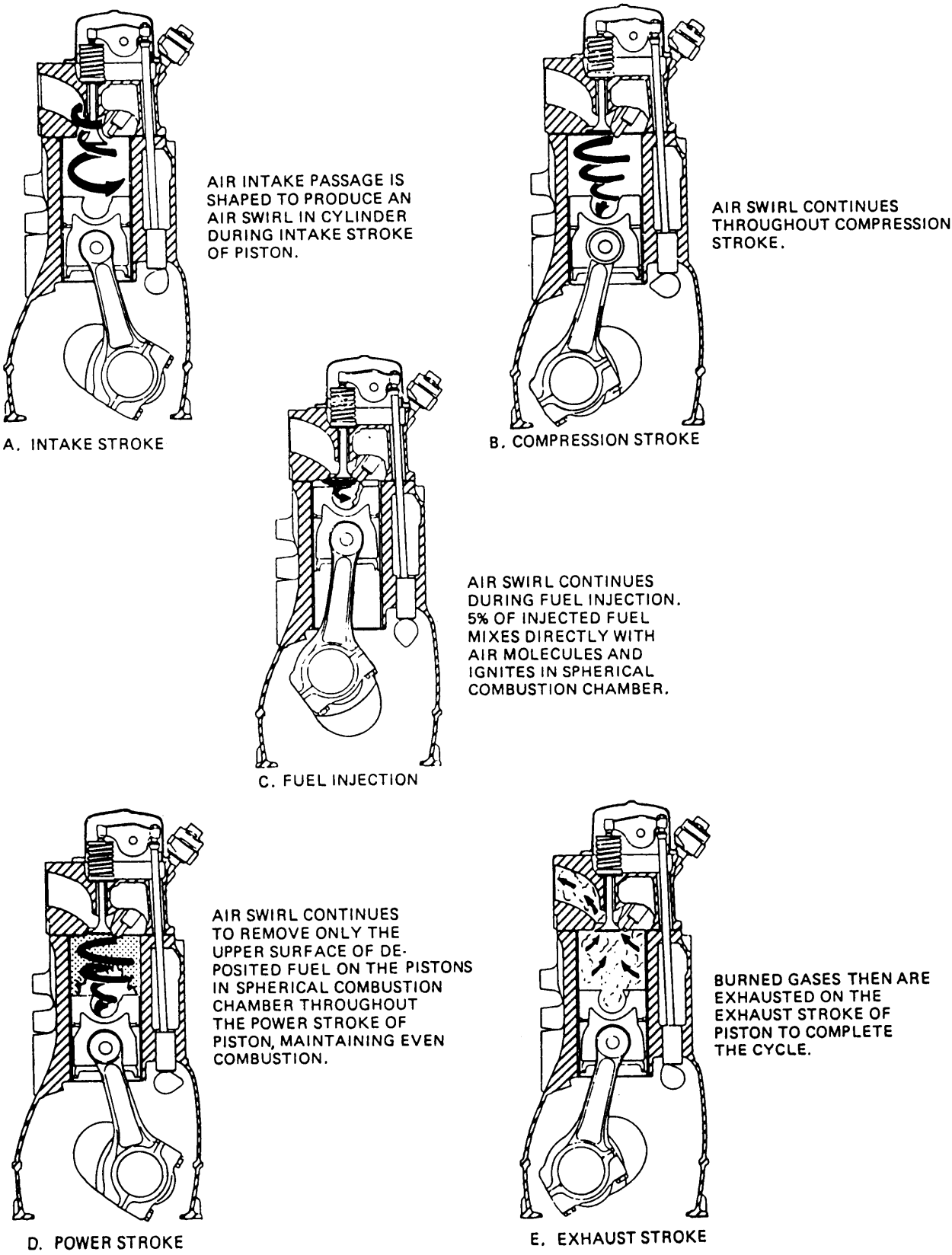

Figure 1-12.-Spherical chamber.

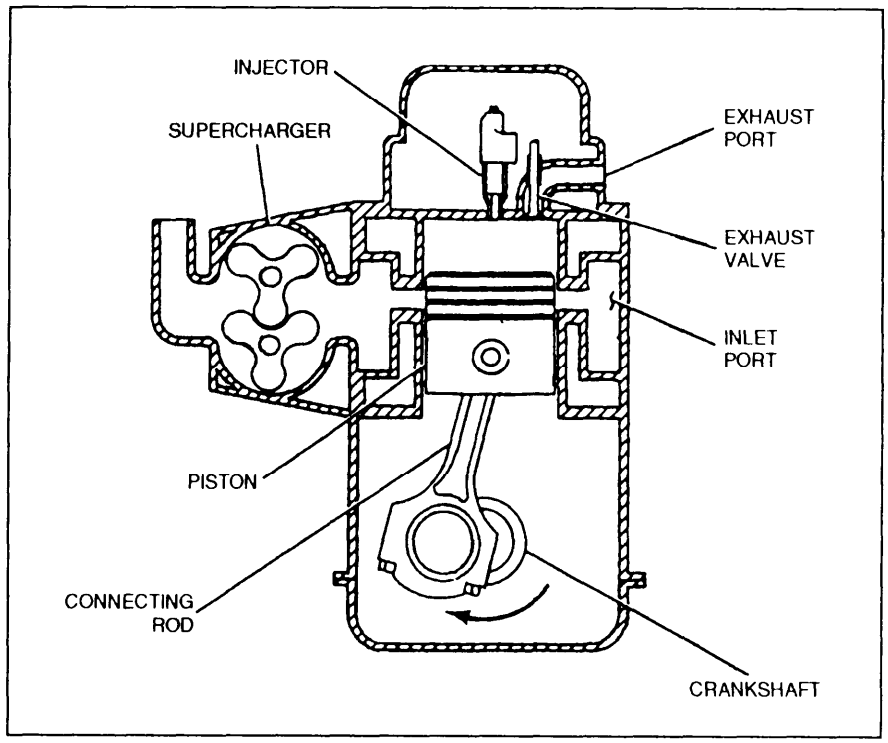

Figure 1-13.—Two-stroke cycle diesel engine.

Two-Stroke Cycle Diesel Engine

A two-troke diesel engine (fig. 1-13) shares the same operating principles as other internal combustion engines. It has all of the advantages that other diesel engines have over gasoline engines.

A two-stroke diesel engine does not produce as much power as a four-stroke diesel engine; however, it runs smoother than the four-stroke diesel. This is because it generates a power stroke each time the piston moves downward; that is, once for each crankshaft revolution. The two-stroke diesel engine has a less complicated valve train because it does not use intake valves. Instead, it requires a supercharger to force air into the cylinder and force exhaust gases out, because the piston cannot do this naturally as in four-stroke engines.

The two-stroke diesel takes in air and discharges exhaust through a system called scavenging. Scavenging begins with the piston at bottom dead center. At this point, the intake ports are uncovered in the cylinder wall and the exhaust valve is open. The supercharger forces air into the cylinder, and, as the air is forced in, the burned gases from the previous operating cycle are forced out (fig. 1-14).

COMPRESSION STROKE.— As the piston moves towards top dead center, it covers the intake ports. The exhaust valves close at this point and seals the upper cylinder. As the piston continues upward, the air in the cylinder is tightly compressed (fig. 1-14). As in the four-stroke cycle diesel, a tremendous amount of heat is generated by the compression.

POWER STROKE.— As the piston reaches top dead center, the compression stroke ends. Fuel is injected at this point and the intense heat of the compression causes the fuel to ignite. The burning fuel pushes the piston down, giving power to the crankshaft. The power stroke ends when the piston gets down to the point where the intake ports are uncovered. At about this point, the exhaust valve opens and scavenging begins again, as shown in figure 1-14.

Valve Train

The operation of the valves in a timed sequence is critical. If the exhaust valve opened in the middle of the intake stroke, the piston would draw burnt gases into the combustion chamber with a fresh mixture of fuel and air. As the piston continued to the power stroke, there would be nothing in the combustion chamber that would

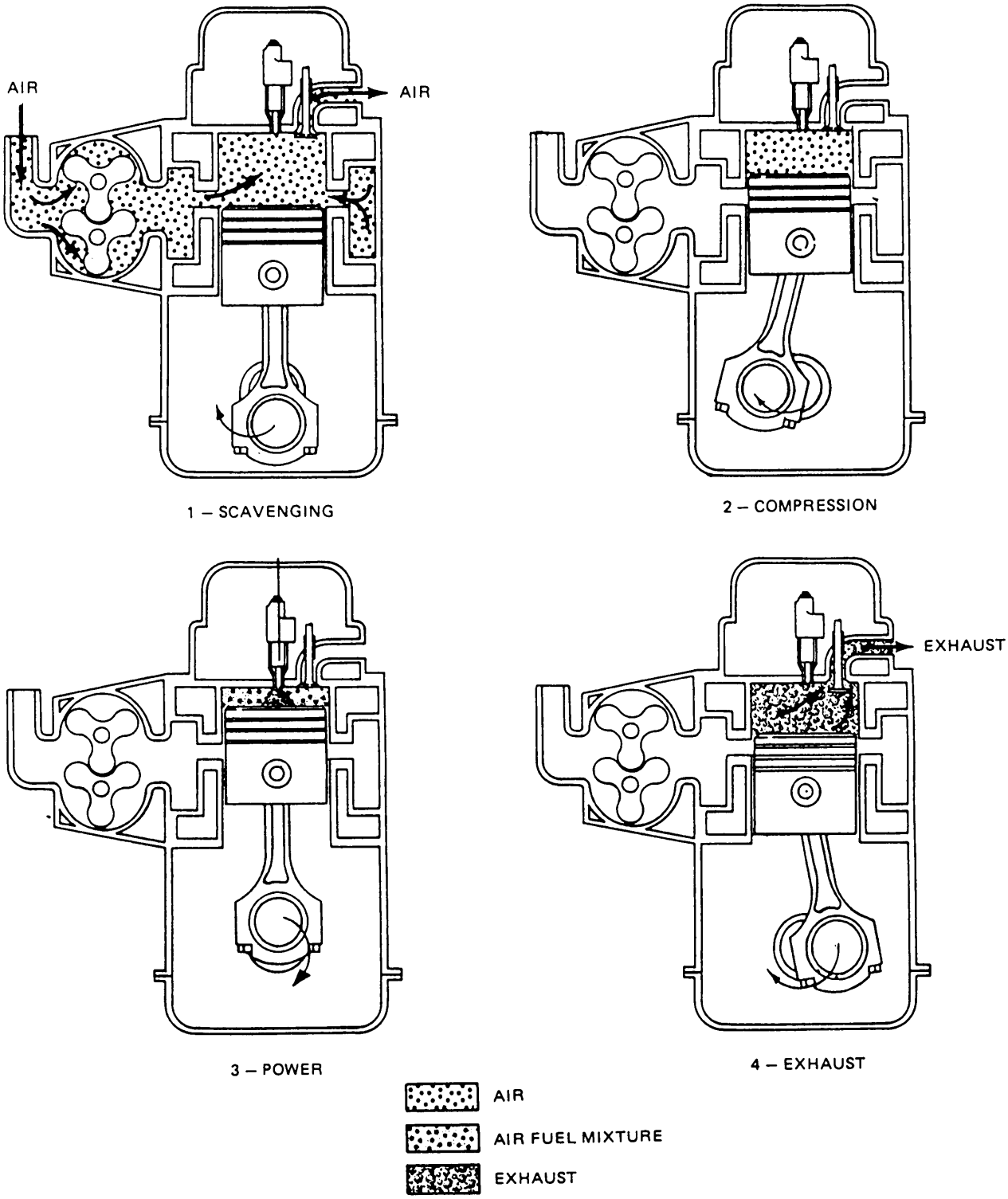

Figure 1-14.—Two-stroke diesel cycle.

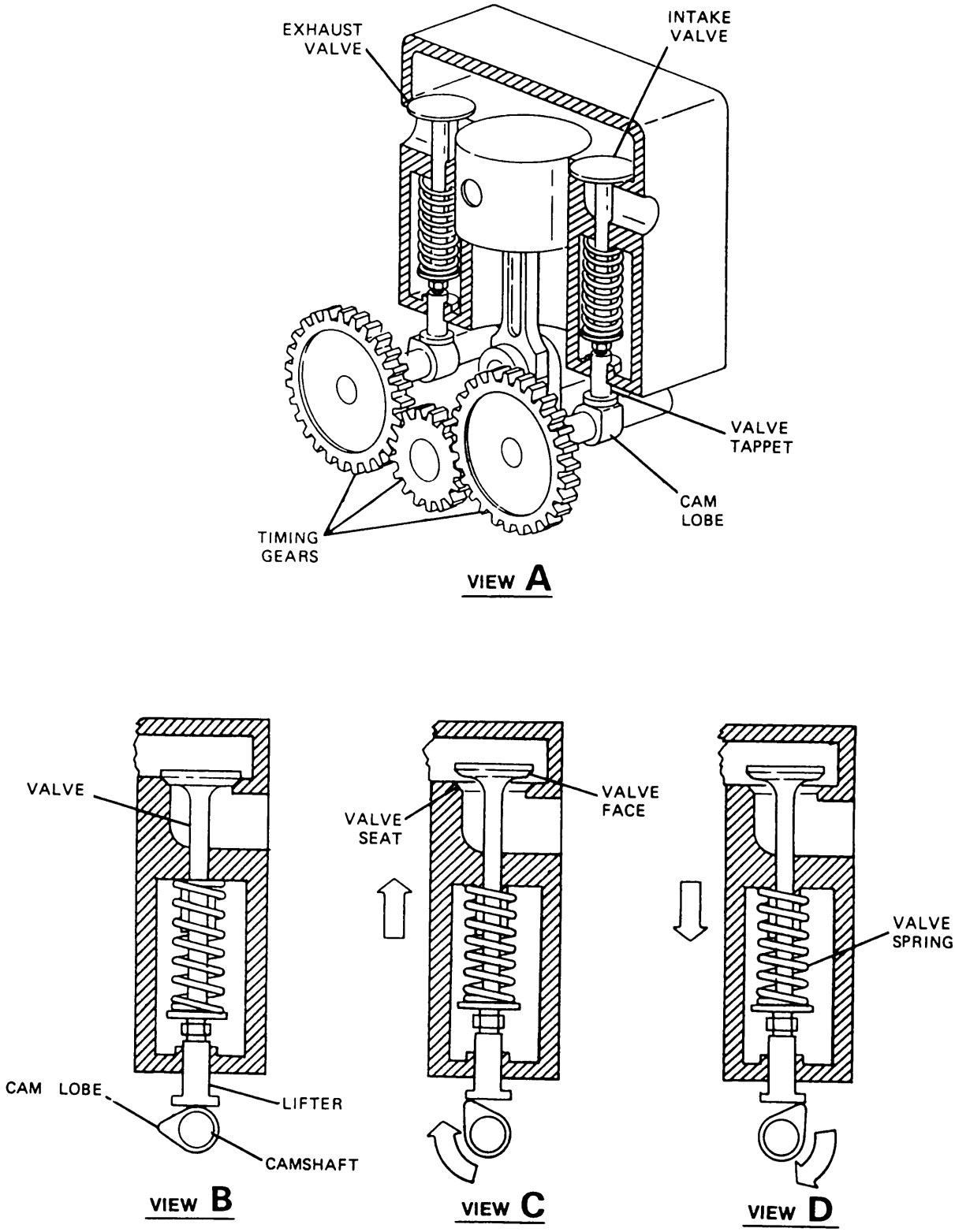

Figure 1-15.—Valve train operation.

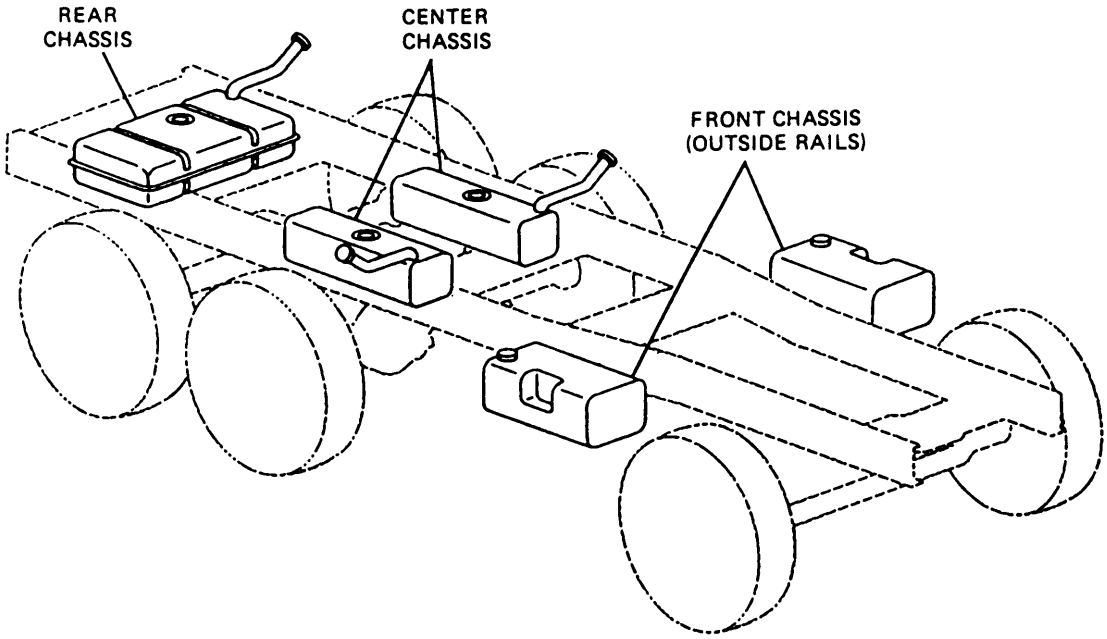

Figure 1-16.-Common fuel tank locations.

bum. The engine is fitted with a valve train to operate the valves, as shown in figure 1-15.

The camshaft is made to rotate with the crankshaft through the timing gears. The cam lobe is the raised portion on the camshaft that contacts the bottom of the lifter. As the cam rotates, the lobe pushes up on the lifter. The cam lobe pushes the valve open against the pressure of a spring. As the cam lobe rotates away from the lifter, the valve spring pulls the valve closed. The proper positioning of the cam lobes on the camshaft establishes a sequence for the intake and exhaust valves.

FUEL SYSTEMS

The function of the fuel system is to ensure a quantity of clean fuel is delivered to the fuel intake of an engine. The system must provide both safe fuel storage and transfer.

FUEL TANKS

Fuel tanks store fuel in liquid form. The tank may be located in any part of a vehicle that is protected from flying debris, shielded from collisions, and not likely to bottom out (fig. 1-16). Most wheeled vehicles use removable fuel tanks.

Most fuel tanks are made of thin sheet metal coated with a lead-tin alloy to prevent corrosion. Fiber glass and a variety of molded plastics are also popular as corrosion-resistant materials.

The walls of fuel tanks are manufactured with ridges to give them strength and internal baffles that increase internal strength and prevent the fuel from sloshing (fig. 1-17). The filler pipe offers a convenient opening to fill the tank and prevent fuel from being spilled onto the

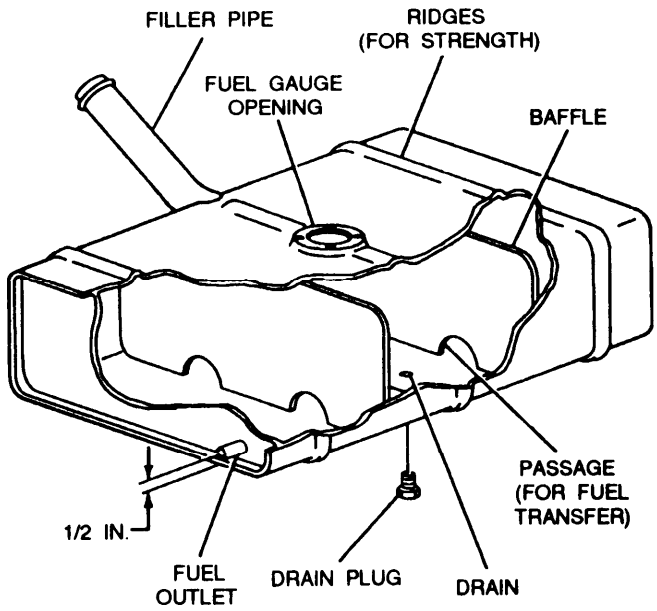

Figure 1-17.-Fuel tank construction.

passenger, engine, or cargo compartments. The fuel outlet pipe is located inside the tank and its opening is about one-half inch above the bottom. This location allows sediment to fall to the bottom of the fuel tank without being drawn into the fuel system. Most fuel tanks have a position on top to install a fuel gauge sending unit. This is usually a flanged hole. A threaded drain plug is normally located at the bottom of the tank and is used for draining and cleaning of the tank.

Gasoline Fuel

Gasoline, a by-product of petroleum, contains carbon and hydrogen. This factor allows the fuel to burn freely and to create extensive heat energy. Two types of gasoline are used: leaded and unleaded. Leaded gasoline has a higher octane rating than unleaded gasoline and is more effective as a valve and valve seat lubricant; however, leaded gasoline has almost been discontinued, because engines that use it emit a great amount of harmful hydrocarbons that pollute the atmosphere. Engines that use unleaded gasoline emit fewer hydrocarbons, have fewer combustion chamber deposits, and provide a longer life for spark plugs, exhaust systems, and carburetors; however, unleaded gasoline emits about the same amount of carbon monoxide and nitrogen oxide as leaded gasoline.

NOTE: The octane number in gasoline is a measure of its ability to burn evenly and resist spontaneous combustion. A knock in a gasoline engine is caused by gases burning too rapidly.

Catalytic Converter

A catalytic converter is positioned in the exhaust system, usually between the engine and the muffler, to control the emission of carbon monoxide and hydrocarbons produced from burning gasoline. As the engine exhaust passes through the converter, carbon monoxide and hydrocarbons are oxidized (combined with oxygen), changing them to carbon dioxide and water. This oxidation causes the outer shell of the converter to operate consistently at temperatures that are several hundred degrees higher than the rest of the exhaust system. The outer shell of the catalytic converter is normally made of stainless steel to cope with the high operating temperatures.

A chemical catalyst is an element or chemical compound that increases the reaction between two other chemicals without reacting with them. In this case, the catalyst in the catalytic converter increases the reaction between oxygen and the harmful carbon monoxide and hydrocarbons to produce harmless carbon dioxide and water emissions.

Platinum and palladium are precious metals often used as catalysts in catalytic converters. Small amounts of the catalysts are used to coat the surfaces of the material in the converter. Two common types of converters are shown in figure 1-18.

NOTE: The use of leaded gasoline is destructive to a catalytic converter. The lead in the exhaust can coat the catalyst as it passes through the converter, and this coating can completely halt catalytic converter operations.

Diesel Fuel

Diesel fuel comes from the residue of the crude oil after the more volatile fuels, such as gasoline and kerosene, are removed during the petroleum refining process. As with gasoline, the efficiency of a diesel fuel varies with the type of engine. The refining and blending process can produce a suitable diesel fuel for almost any engine operating conditions. Using a contaminated fuel or an improper grade of fuel can cause hard starting, incomplete combustion, a smokey exhaust, or cause an engine to knock.

Cleanliness of diesel fuel is important because fuel containing more than a trace of foreign substances can cause fuel pump and injector problems to develop. Diesel fuels can hold dirt particles in suspension longer than gasoline because it is heavier and more viscous. In refining, not all foreign materials can be removed, and harmful matter, such as dirt and water, can get into the fuel during the handling process, Water can rust an injection system and cause it to fail. Dirt clogs injectors and spray nozzles and can cause an engine to misfire or stop altogether. To be safe, remember to take precautions when refueling and try to prevent foreign matter from entering the fuel tank.

High-cetane diesel fuels allow diesel engines to be started at low temperatures, provide fast warmups without misfiring or producing white smoke, reduce the formation of carbon deposits, and eliminate diesel knock. However, a too high cetane number can lead to incomplete combustion and exhaust smoke if the delay is too short to allow for proper mixing of fuel and air. Most diesel fuels range from 33 to 64 in cetane number, with 40 the minimum for military grades DF-1 and DF-2.

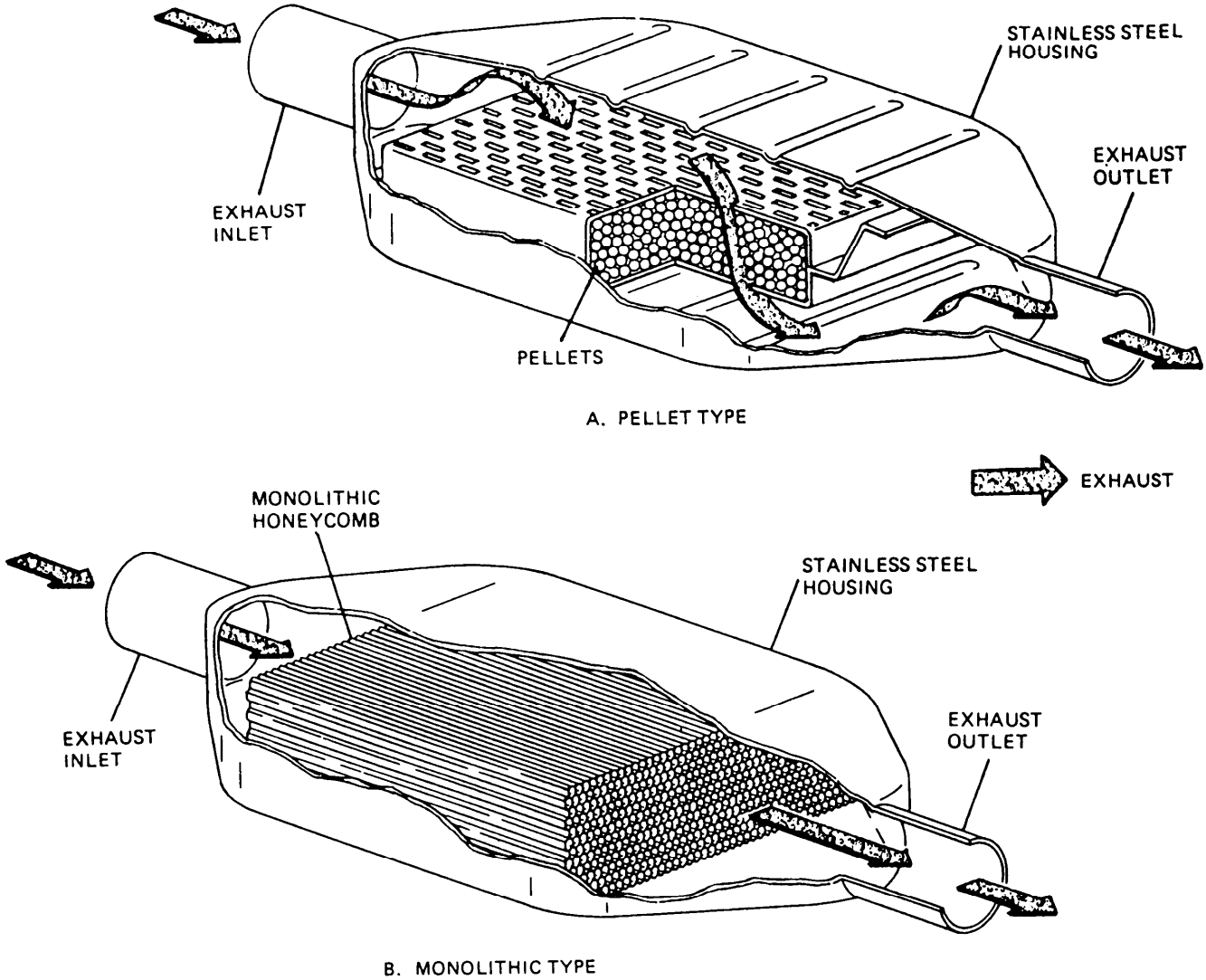

Figure 1-18.-Catalytic converter.

NOTE: The cetane number is a measure of the ability of a diesel fuel to provide fast spontaneous combustion with short ignition delay. A knock in a diesel engine is caused by the fuel igniting too slowly.

Jet Fuel

You may be deployed to some sites at which diesel fuel is not available and JET FUEL has to be used. The three major types of jet fuel used by the military are JP-4, JET-A1, and JP-5. **DO NOT USE JP-4 IN ANY DIESEL ENGINE.** The maintenance supervisor approves the use of JET-A1 and JP-5 and directs the amount of engine oil that must be added to the jet fuel. This must be done to improve the lubricating qualities that prevent the injector pump and injectors from seizing.

FUEL FILTERS

Fuel filters trap foreign material that may be present in the fuel and prevent it from entering the carburetor or sensitive fuel injection components.

Gasoline Fuel Filter

On a gasoline engine system there is at least one fuel filter used in the fuel system and it can be located in any accessible place along the fuel delivery line. Filters also can be located inside fuel tanks, carburetors, and fuel pumps.

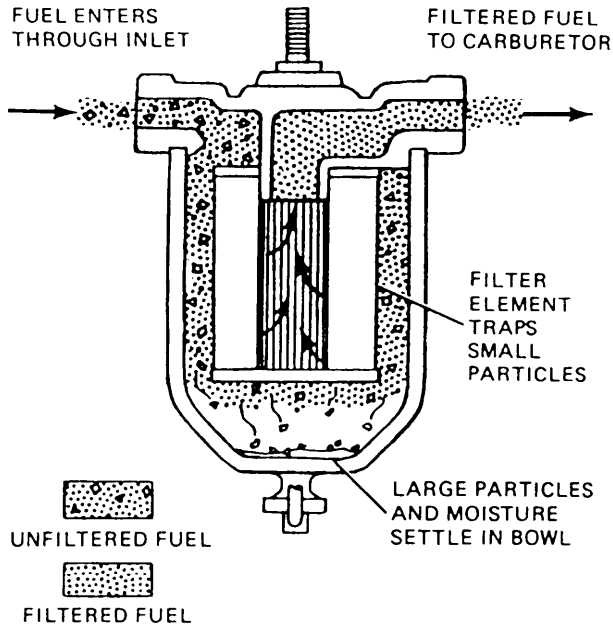

Figure 1-19.—Fuel filter operation.

The fuel filter operates by passing fuel through a porous material that blocks particles large enough to cause a problem in the system. Some filters also act as sediment bowls; water and larger particles of foreign matter settle to the bottom where they can be drained off (fig. 1-19).

Figure 1-20 shows the three types of fuel filters in common use. They are the replaceable in-line filter (view A), the in-line filter element (view B), and the glass bowl (view C).

Filter elements are made from ceramic, treated paper, sintered bronze, or metal screen, as shown in figure 1-21. A filter element that differs from the others is a series of closely spaced laminated disks. As the gasoline proses between the disks, foreign matter is blocked out.

Diesel Fuel Filters

Diesel fuel filters are called full-flow filters, because all the fuel must pass through them before reaching the injection pumps. They are very important because diesel fuels are more viscous than gasoline and

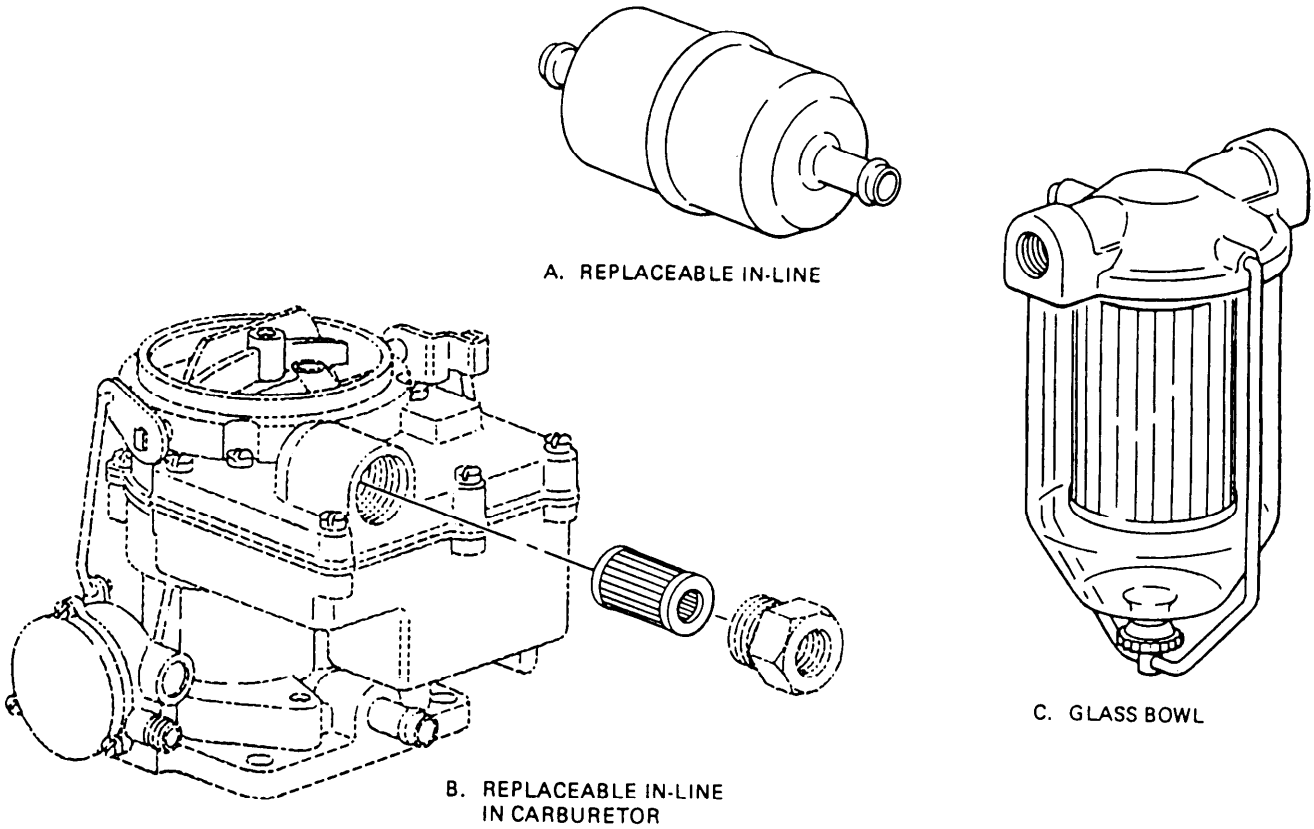

Figure 1-20.—Fuel filter configurations.

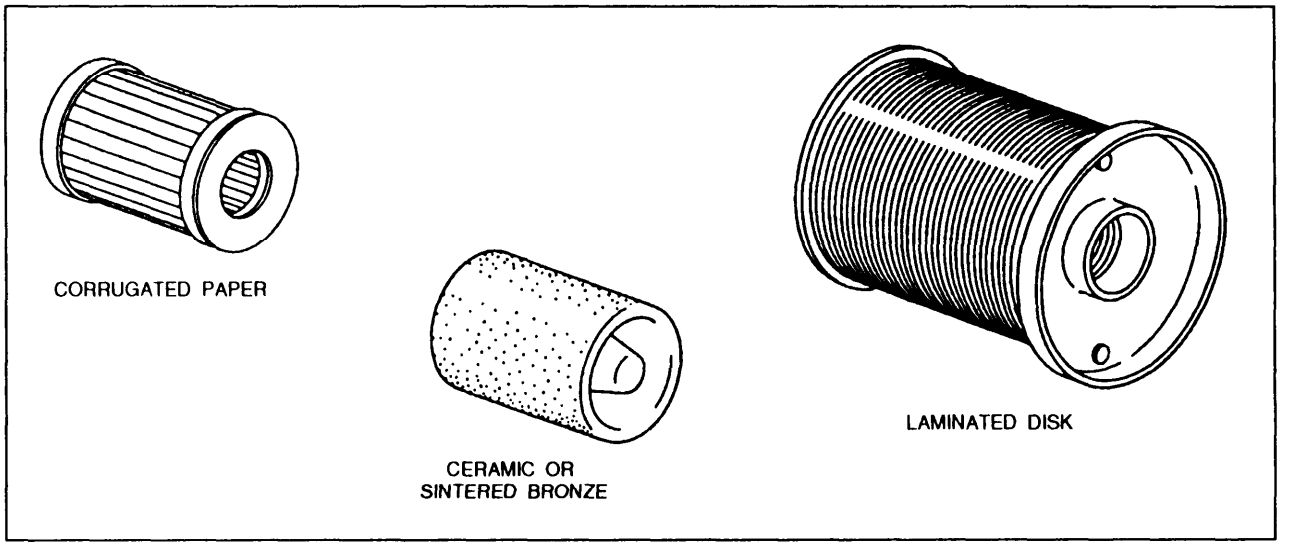

Figure 1-21.—Fuel filter elements.

contain more gum and abrasive particles that can cause premature wear of injection equipment. Some diesel fuel filters have an air valve to release any air that accumulates in the filter during operation.

Most diesel engine designs include two filters in the fuel supply system: a primary filter and a secondary filter.

PRIMARY FILTER.— In most designs, the primary filter is located between the fuel tank and the fuel supply pump. A primary falter contains a coarse filter material that removes the larger foreign matter. They are metal filters and only allow fine particles to pass through them (fig. 1-22). Solid materials larger than 0.005 inch remain outside the metal disks, while the larger foreign matter and most of the water settle to the bottom of the bowl. This matter can be removed through a drain plug. A ball relief valve in the filter cover enables the fuel to bypass the filter element if the disks become clogged. Most types of heavy equipment have a fuel pressure gauge that indicates when the filters are dirty.

NOTE: A good practice is to drain about one fourth of a pint of fuel out of the filter into a container or onto a rag during the prestart operations. This practice allows you to drain out any foreign matter that has settled to the bottom of the filter.

SECONDARY FILTER.— The secondary falter is usually located between the fuel supply pump and the fuel injection pump. It contains a fine filter that removes even the most minute traces of foreign matter from the

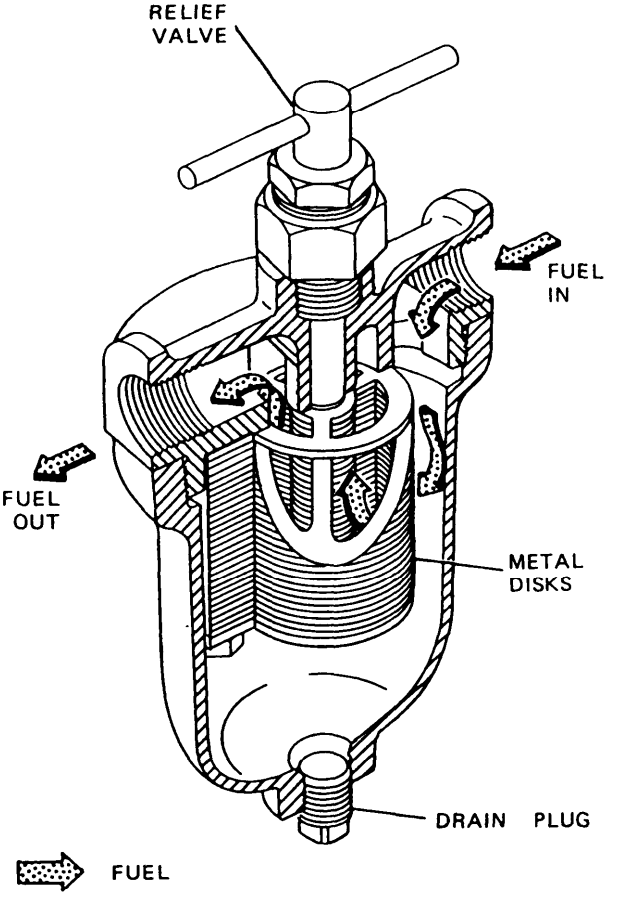

Figure 1-22.-Primary fuel filter.

fuel. Secondary filters (fig. 1-23) are fabric filters that have greater filtering qualities than primary filters. They arc used principally as the primary filter to protect the fuel injection pump.

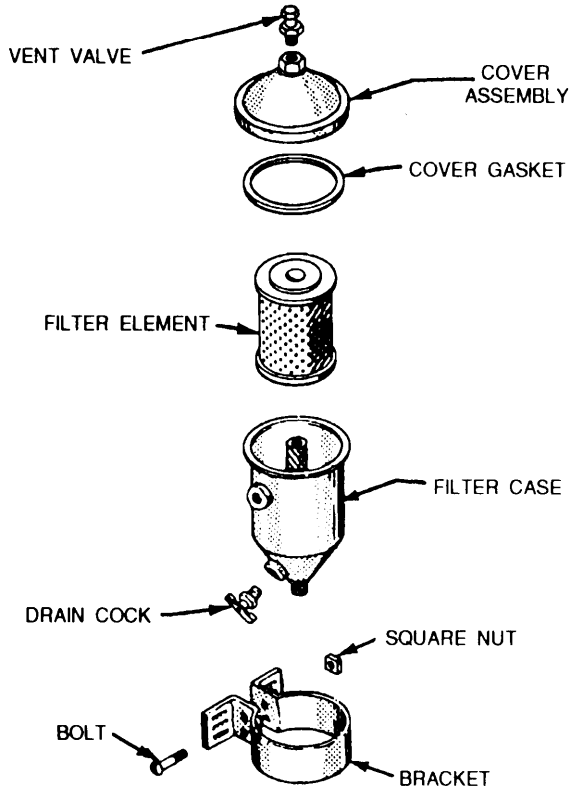

Figure 1-23.-Secondary fuel filter.

GASOLINE FUEL SYSTEM

The three basic parts of a gasoline fuel system are the fuel tank, fuel pump, and carburetor. Fuel is supplied from the fuel tank to the carburetor by either a gravity-feed system or a force-feed system. The gravity-feed system has the fuel tank placed above the carburetor (fig. 1-24). Afloat attached to a valve allows fuel to enter the carburetor at the same rate at which the engine is consuming it. This system maintains a uniform level in the carburetor regardless of the amount of fuel in the tank. The force-feed system (fig. 1-24) is where the fuel tank is located below the carburetor and a fuel pump is required.

Fuel Pump

The fuel pump draws the gasoline through a fuel line from the tank and forces it to the float chamber of the carburetor where it is stopped. Several types of fuel pumps are used; however, the most common type is the mechanical nonpositive fuel pump (fig. 1-25).

Carburetor

The carburetor is basically an air tube that operates by a differential in air pressure. It has an hourglass-shaped tube called a **throat** and the most constricted part

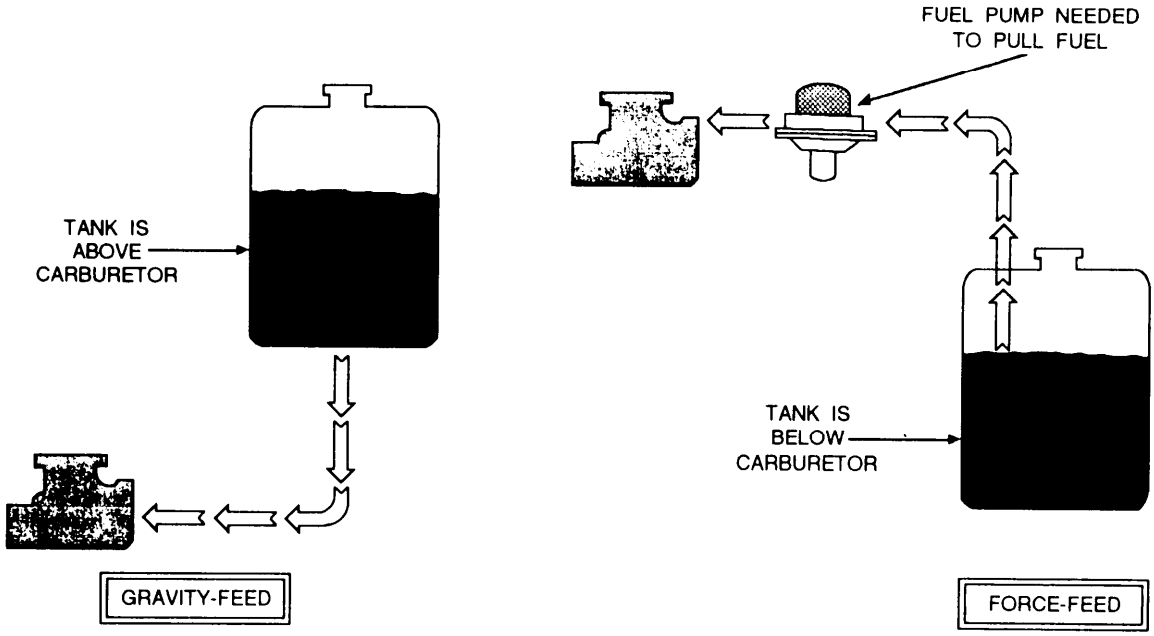

Figure 1-24.-Fuel systems.

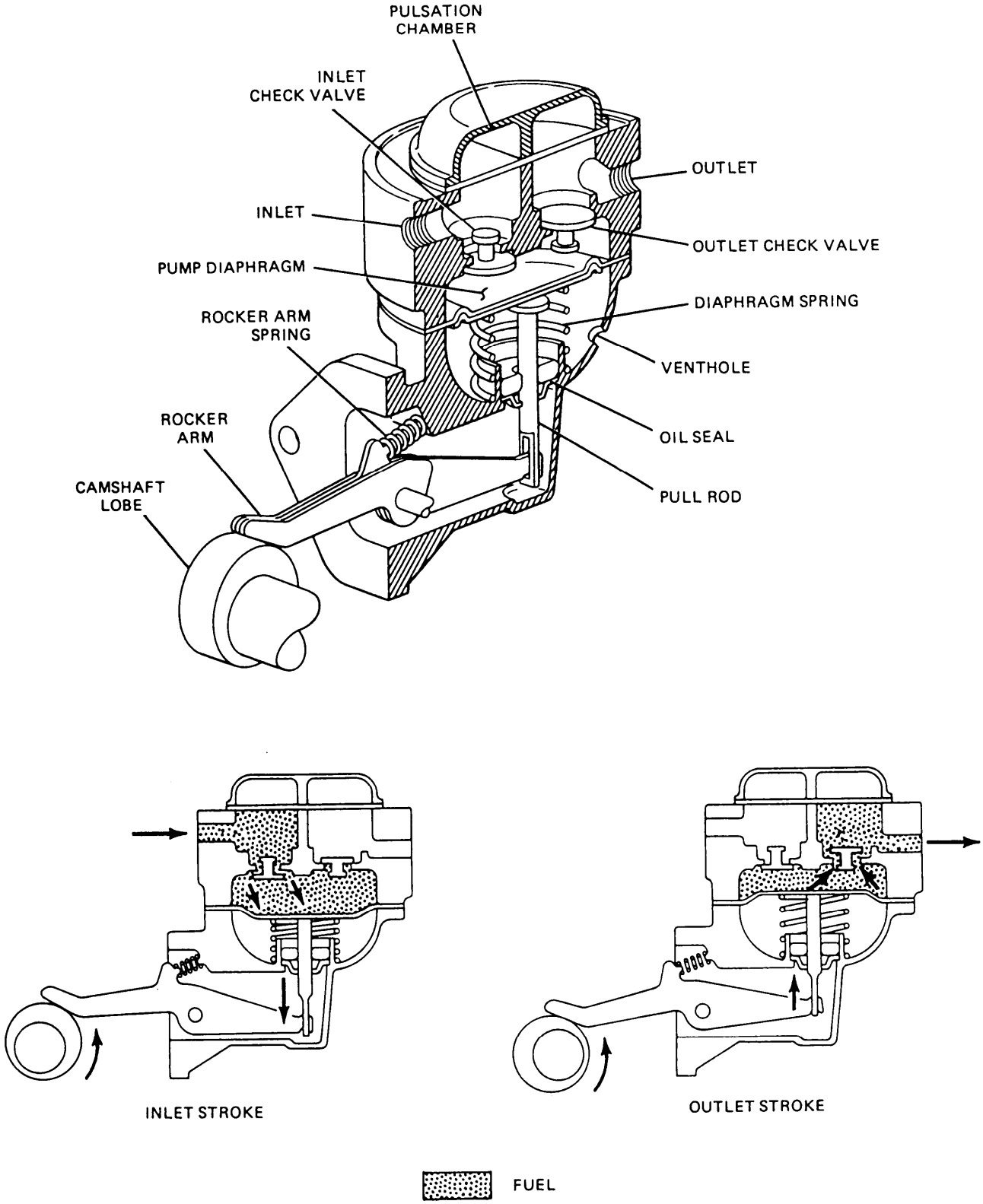

Figure 1-25.-Mechanical nonpositive pump.

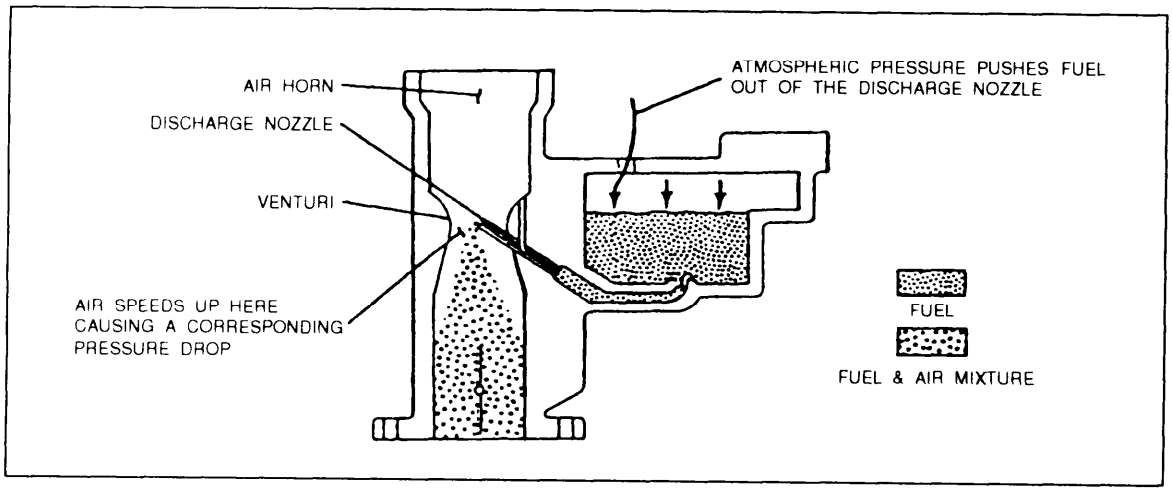

Figure 1-26.—Venturi effect.

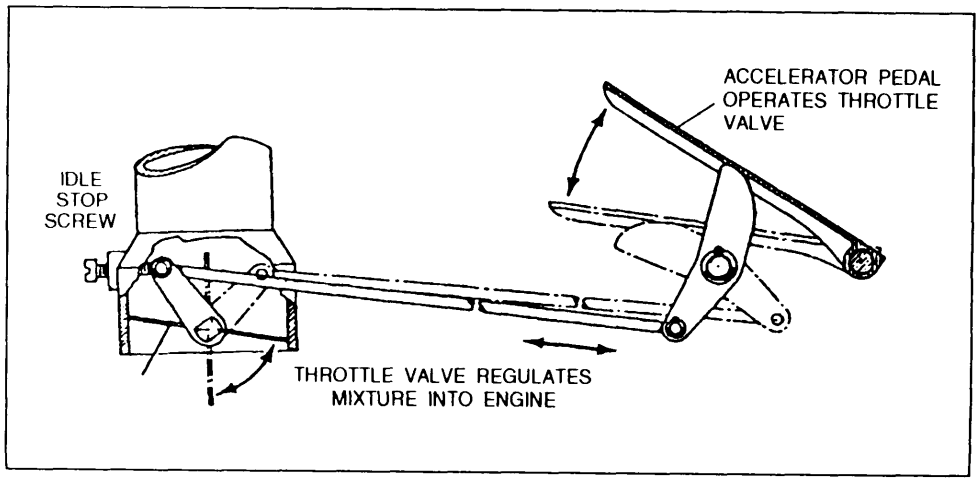

Figure 1-27.—Throttle valve.

of the throat is called the venturi (fig. 1-26). A tube called a discharge nozzle is positioned in the venturi and is connected to a reservoir of gasoline called the float bowl.

The downward intake stroke of the piston creates a partial vacuum in the carburetor throat that allows low-pressure air to rush by the fuel nozzle. This forces small drops of fuel to be mixed with the air. Then the fuel and air mixture must pass the throttle valve which is controlled by the operator (fig. 1-27). The throttle valve opens or closes to allow the correct volume of the fuel and air mixture into the engine. The choke valve (fig. 1-28) also controls the supply of fuel to the engine. When you start the engine in cold weather, the choke valve can be partly closed, forming a restriction that causes more fuel and less air to be drawn into the combustion chamber. This results in a richer air to fuel

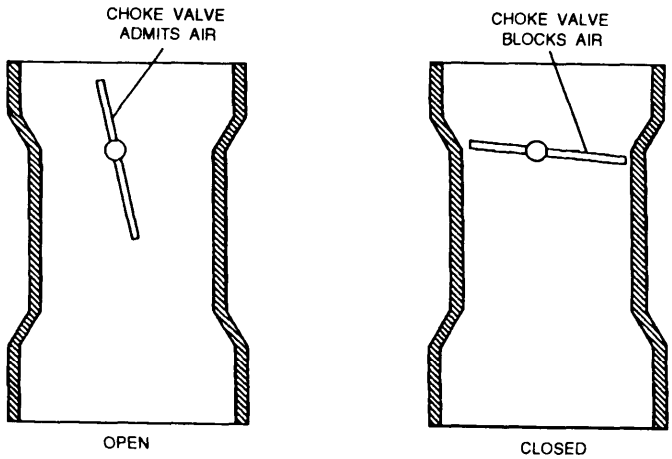

Figure 1-28.-Choke valve operation.

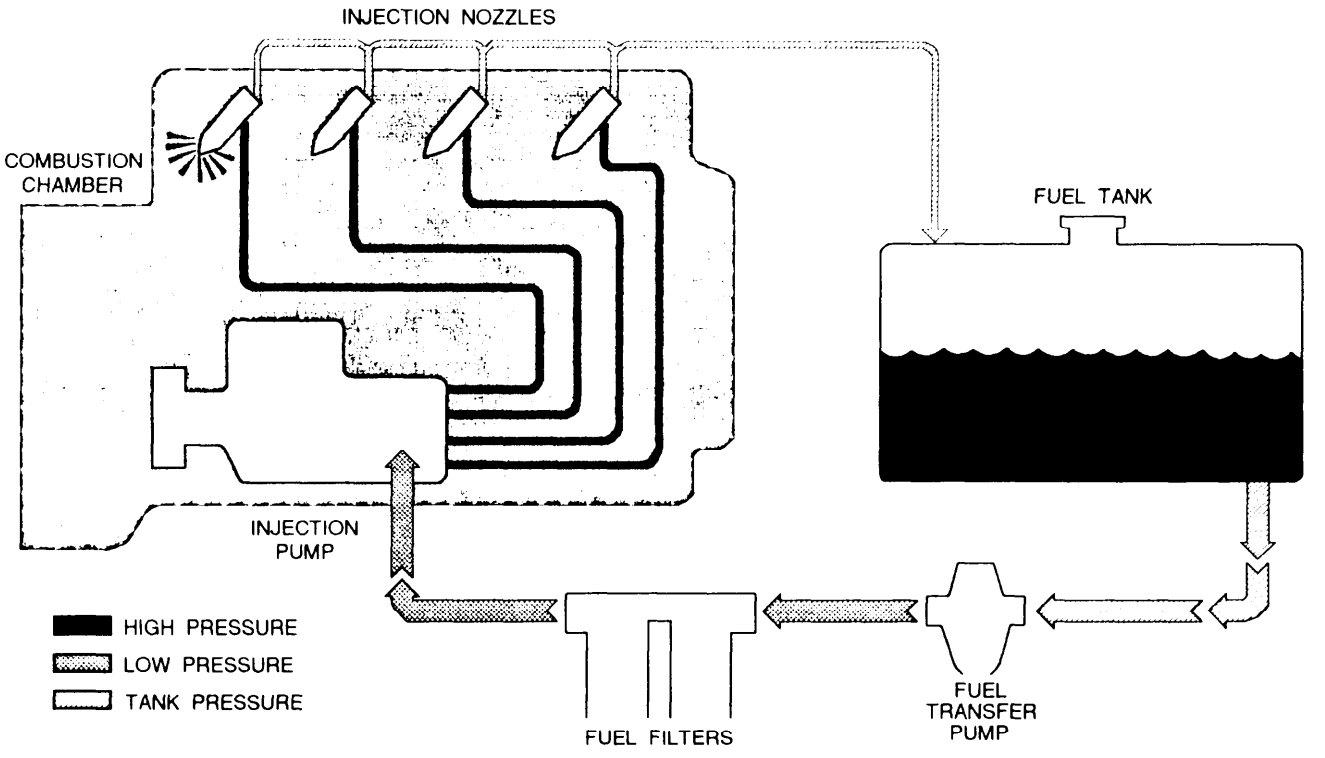

Figure 1-29.—Diesel fuel system.

mixture in the cylinders for the harder job of starting at low temperature.

DIESEL FUEL SYSTEM

The primary job of the diesel fuel system is to inject a precise amount of atomized and pressurized fuel into each engine cylinder at the precise time. The major parts of the diesel system are the fuel tank, fuel transfer pump, fuel filters, injection pump, and injection nozzles (fig. 1-29).

Fuel Transfer Pump

The fuel transfer pump is normally used on modern high-speed diesel engines. It can be driven by either engine or battery voltage. The fuel transfer pump can be located on the outside of the fuel tank in the supply line, submerged within the fuel tank, or mounted on the backside of the injection pump. The fuel pump pushes or draws the fuel through the filters where the fuel is cleaned.

Injection Pump

Several types of injection pumps are used on diesel engines. Each has its own unique operating principles. The primary function of the injection pump is to supply high-pressure fuel for injection.

Injection Nozzles

A wide variety of injector nozzles are in use today. All are designed to perform the same basic function which is to spray the fuel in atomized form into the combustion chamber of each cylinder.

Cold Weather Starting Aids

Diesel fuel evaporates much slower than gasoline and requires more heat to cause combustion in the cylinders of the engine. For this reason, preheater and starting aids, called glow plugs, are installed on equipment equipped with diesel engines.

PREHEATERS.— Preheaters are normally installed in the intake manifold; however, in a two-stroke cycle engine, they are placed in the air passages surrounding the cylinders. The preheater burns a small quantity of diesel fuel in the air before the air is drawn into the cylinders. This burning process is accomplished by the use of either a glow plug or an ignition coil that produces a spark to ignite a fine spray of diesel fuel. The resulting heat warms the remaining air before it is drawn into the cylinders.

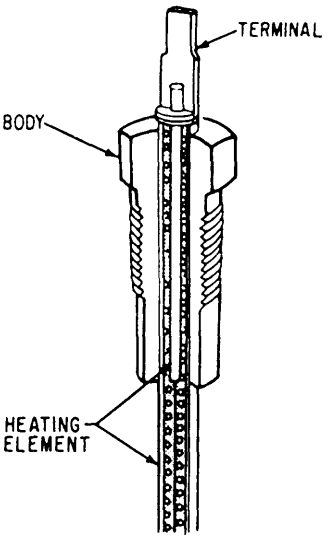

Figure 1-30.-Glow plug.

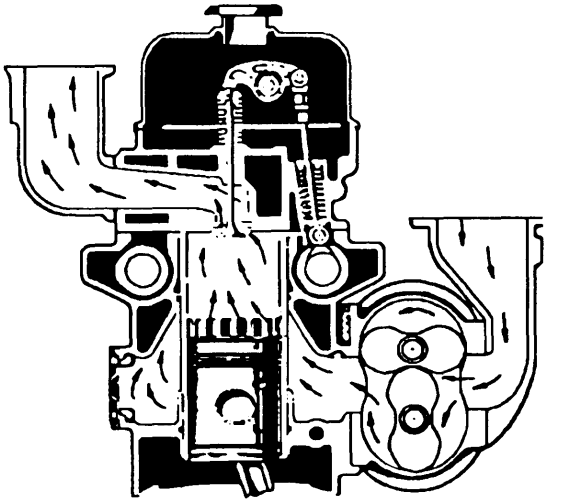

Figure 1-31.—Blower air intake system.

GLOW PLUGS.— Glow plugs (fig. 1-30) and the injection nozzle are installed in the precombustion chamber of the cylinder head. The glow plug is turned on when you turn on the ignition switch. On some equipment a light on the dashboard signals that the glow plug is cycling which signals you to wait between 15 to 30 seconds before cranking the engine. The heat, created by electrical resistance in the glow plug, heats the fuel and air mixture. The heat generated by the glow plug and the heat generated by compression allow the fuel to ignite.

AIR INDUCTION SYSTEMS

The function of an air intake system is to supply the correct amount of air needed to increase the combustion and the efficiency of an engine. On a diesel engine, the air intake system cleans the intake air, silences the intake noise, furnishes air for supercharging, and supplies scavenged air in two-stroke engines.

The three major components of the air induction system are blowers, turbochargers, and superchargers. They may be of the centrifugal or rotary type, or they may be gear-driven directly from the engine, belt or chain-driven, or driven by the flow of exhaust gases from the engine.

BLOWERS

The scavenging process, used in the two-stroke cycle diesel engine, is simply a charge of air forced into the cylinder by the blower. As this charge of air is forced into the cylinder, all the burnt gases are swept out through the exhaust valve ports. This air also helps cool the internal engine parts, particularly the exhaust valves.

The blower shown in figure 1-31 provides the forced-air induction for the scavenging process. Two rotors are closely fitted in a housing that is bolted to the engine. The rotor lobes provide continuous and uniform displacement of air as the rotors revolve. Blower rotors either have two lobes or three lobes, depending on the type.

TURBOCHARGERS

The four-stroke cycle engine uses two methods of air induction: naturally aspirated and turbo charged. The naturally aspirated system depends on atmospheric pressure to keep a constant supply of air in the intake manifold. The turbocharger is designed to force air into the cylinder and aid in scavenging the exhaust gases. The turbocharger differs from the blower in that the turbocharger uses the energy of exhaust gases to drive a turbine wheel (fig. 1-32).

The hot exhaust gases from the engine go through the exhaust inlet, across the turbine wheel, and out the exhaust outlet. The force of the exhaust turns the turbine wheel and shaft. This action rotates the compressor wheel (impeller) that is attached to the opposite end of the turbine shaft. As the impeller rotates, it draws air into the housing. The air is then compressed and forced into the intake manifold.

SUPERCHARGERS

Superchargers are engine-driven air pumps that force the air and fuel mixture into the engine. They are made in three basic configurations: centrifugal, Roots, and vane.

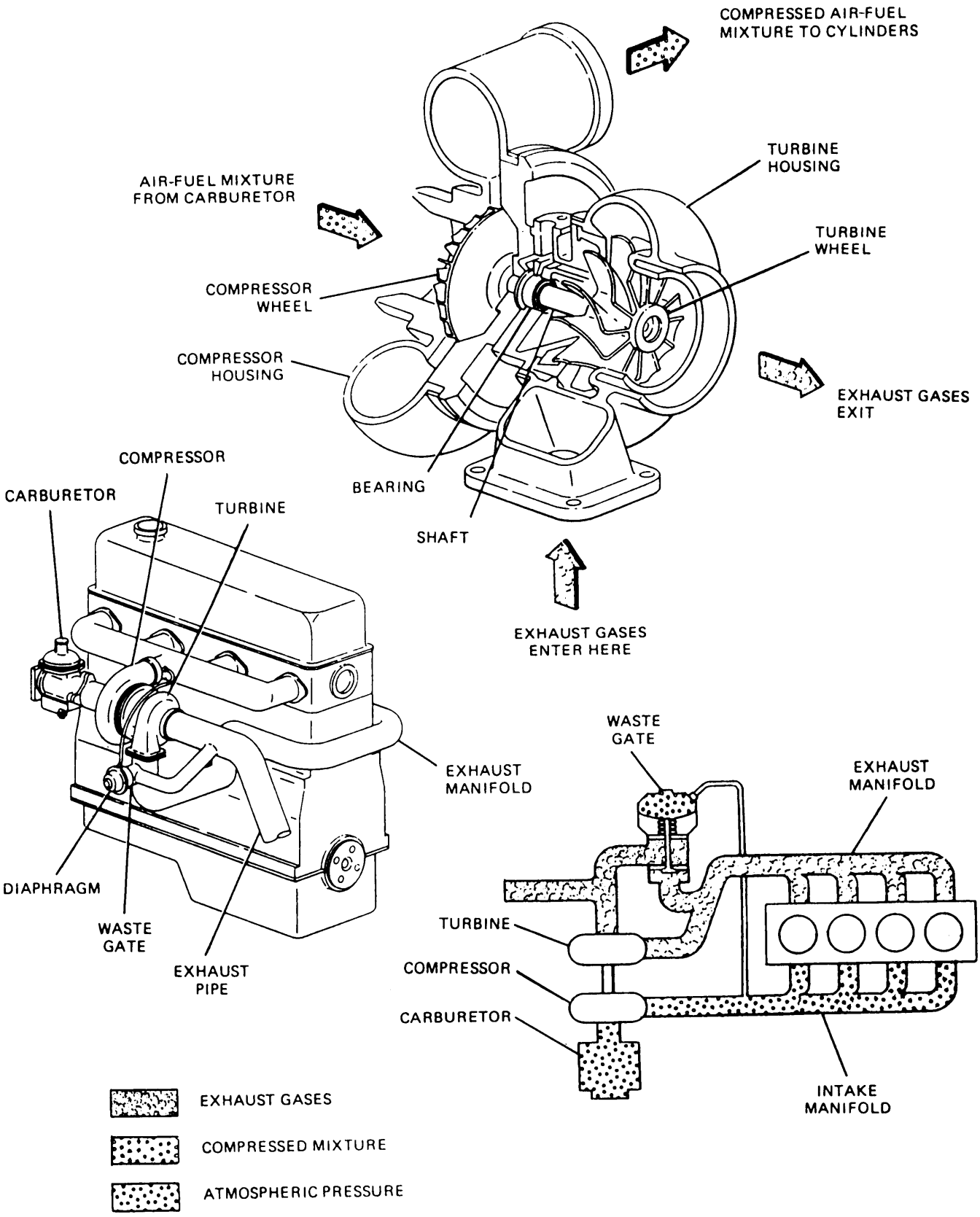

Figure 1-32.-Turbocharger.

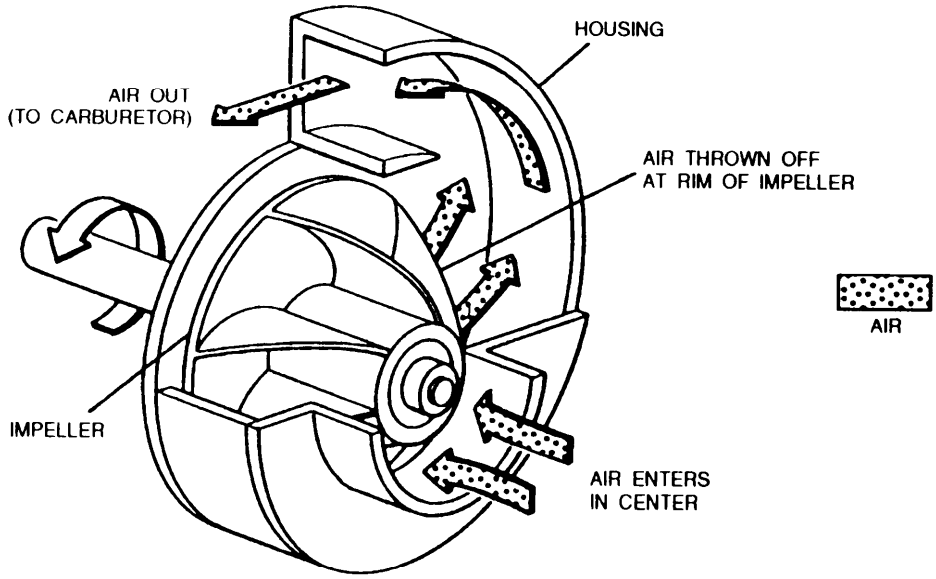

A. CENTRIFUGAL SUPERCHARGER

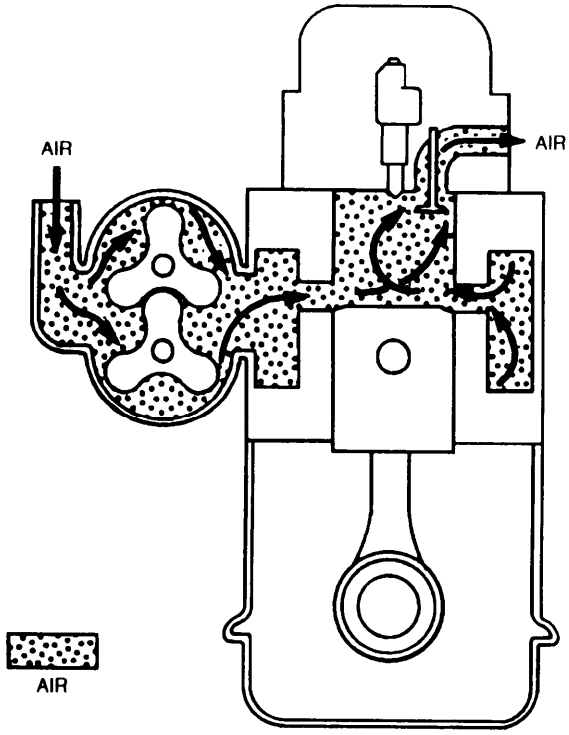

B. ROOTS SUPERCHARGER

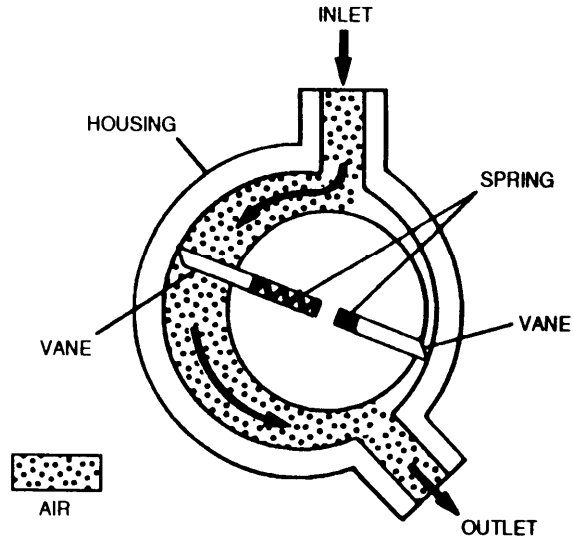

C. VANE SUPERCHARGER

Figure 1-33.-Superchargers.

Centrifugal Supercharger

The centrifugal supercharger (fig. 1-33, view A) has an impeller equipped with curved vanes. As the impeller is driven by the engine, it draws air into its center and throws it off at its rim. The air then is pushed along the inside of the circular housing. The diameter of the housing gradually increases to the outlet where the air is pushed out to the engine intake system.

Roots Supercharger

The Roots supercharger (fig. 1-33, view B) is a positive displacement type of supercharger that consists of two rotors inside a housing. As the rotors are driven by the engine, air is trapped between them and the housing. The air is then carried to the outlet where it is discharged. Because of the extremely narrow clearance between the rotors and the housing, this supercharger is very sensitive to dirt.

Vane Supercharger

The vane supercharger (fig. 1-33, view C) is a positive displacement supercharger that has a rotor that revolves in a body, the bore of which is eccentric to the rotor. Two sliding vanes are placed 180 degrees apart in slots in the rotor and are pressed against the body bore by springs in the slots. When the shaft is rotated, the vanes pick up air at the inlet port and carry it around the body to the outlet side where the air is discharged to the intake system of the engine.

AIR CLEANERS

Clean air is essential to the performance and life of an engine. The air cleaner must remove fine materials, such as sand, dust, or lint, from the air before it enters the intake system. The air cleaner normally has a reservoir large enough to hold material taken out of the air; therefore, operation over a reasonable time is possible before cleaning and servicing are necessary.

NOTE: A buildup of dust and dirt in the air cleaner passages will eventually choke off the air supply, causing poor combustion.

Multiple air cleaners are sometimes used in locations where engines are operated under extremely dusty air conditions or when two small air cleaners must be used in place of a single large cleaner.

The most common type of air cleaners are the following: pre-cleaners, dry air cleaners, dry element air cleaners, and oil bath air cleaners.

Pre-Cleaners

Pre-cleaners are devices that remove large particles of dirt or other foreign matter from the air before it enters the main air cleaner. This relieves most of the load on the air cleaner. Pre-cleaners are normally installed at the end of an air cleaner inlet pipe that extends upward into the air (fig. 1-34). This locates them in an area relatively free of dust.

NOTE: Cleaning out the collector bowl of the pre-cleaner is part of operator's maintenance and should be performed during both prestart and post-operation maintenance.

Dry Air Cleaners

Dry air cleaners (fig. 1-35) are attached directly to the intake system and are used on engines in which the

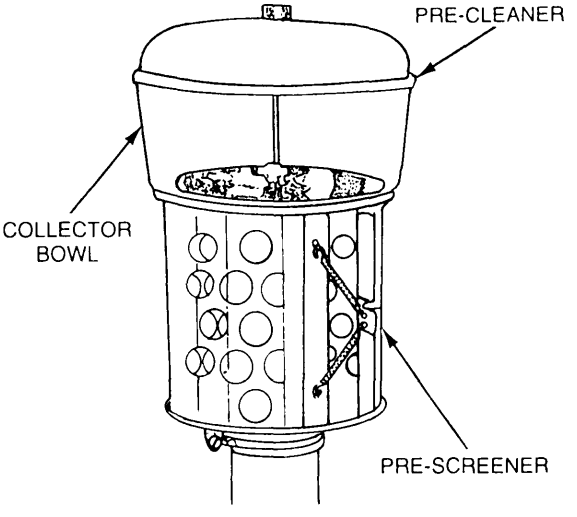

Figure 1-34.—Pre-cleaner.

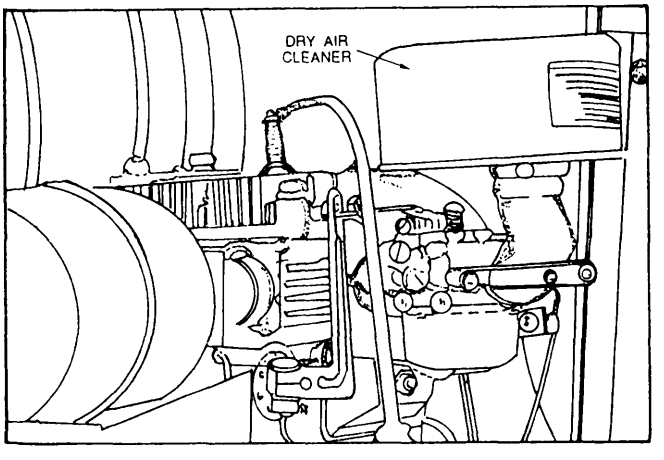

Figure 1-35.—Dry air cleaner.

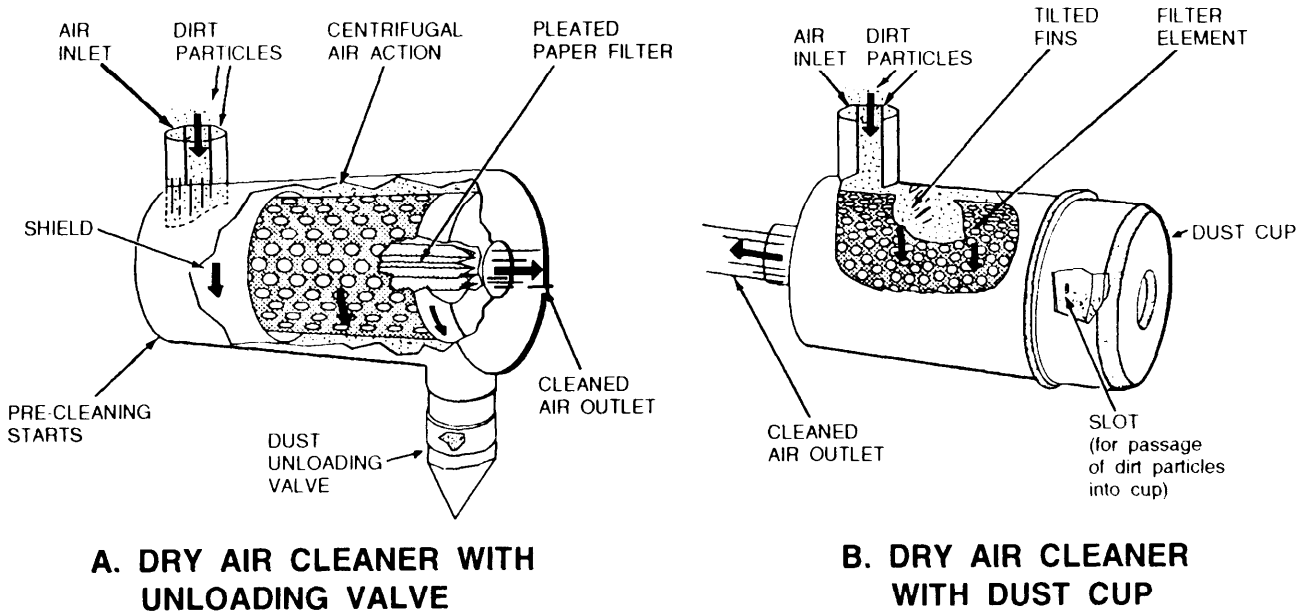

Figure 1-36.-Dry-element air cleaner.

demand for air is small. The dry air cleaner cleans the air by passing it through layers of cloth or felt that removes large dirt particles from the air very effectively.

Dry-Element Air Cleaners

The two most common dry-element air cleaners used are the cleaner with an unloading valve and a cleaner with a dust cup (fig. 1-36).

Dry air cleaners are built for two-stage cleaning: pre-cleaning and filtering. The cleaner with the dust unloading valve, as shown in figure 1-36, view A, directs the air into the pre-cleaner so that it strikes one side of the metal shield. This starts the centrifugal suction that continues until it reaches the far end of the cleaner housing. At this point, the dirt is collected into the dust unloader valve located at the bottom of the housing.

The dust unloader valve is a rubber duck-bill device that is held closed by engine suction while the engine is running. When the engine is shut down, the weight of the accumulated dirt helps open the flaps so the dirt can drop out. The cleaner with the dust air cup, as shown in figure 1-36, view B, pulls in the air past tilted fins that starts the centrifugal suction. When the air reaches the end of the cleaner housing, the dirt passes through a slot in the top of the cleaner and enters the dust cup.

Both types of pre-cleaners remove over 80 percent of the dirt particles, greatly reducing the load on the filters. After the air goes through the pre-cleaning stage, it then passes through the holes in the metal jacket surrounding the pleated-paper filter. Filtering is performed as the air passes through the paper filter that filters out almost all of the remaining small particles.

Checking and cleaning air cleaners equipped with either a dust unloading valve or dust cup is part of the daily prestart and post-operational checks and maintenance performed by the operator. The dust unloading valve should be inspected for cracks, clogging, and deterioration. The dust cup should be removed and wiped clean with a rag. Dusty filter elements should be removed and cleaned by tapping and rotating the filter on the heel of your hand to remove the dust.

NOTE: Do not tap the filter on a hard surface; this can damage the element.

When the tapping does not remove the dust, use a compressed air cleaning gun to clean the filter (fig. 1-37). Direct the clean dry air up and down the pleats, blowing from inside to outside.

NOTE: To prevent rupturing the filter, you must not allow the compressed air pressure to exceed 30 psi.

To clean with water, you first blow out the dirt with compressed air, then flush the remainder of the dirt from inside to outside with water. After flushing is completed, allow the filter to dry.

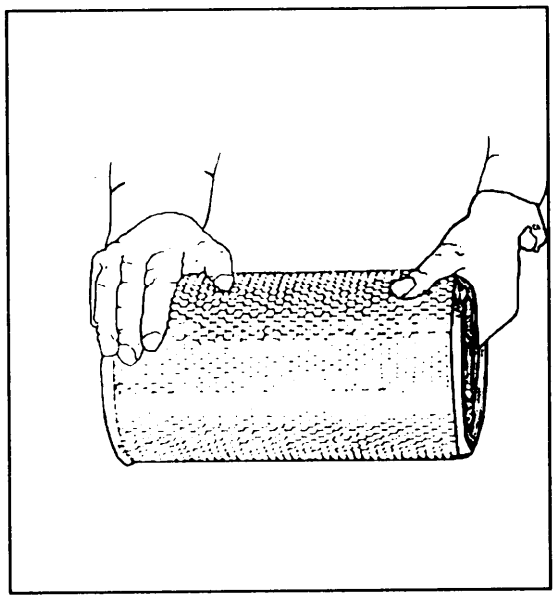

PATTING THE ELEMENT

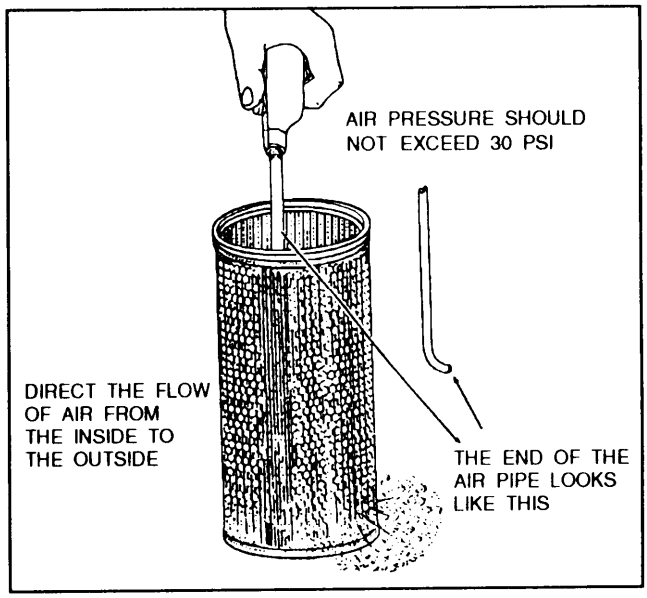

CLEANING AN AIR FILTER WITH LOW-PRESSURE AIR

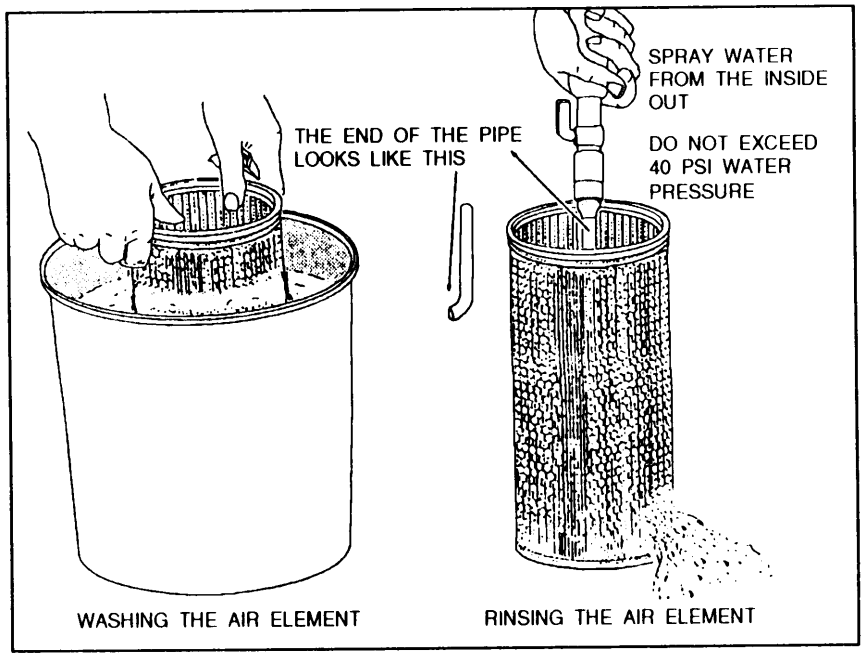

CLEANING AN AIR FILTER WITH SOAP AND WATER

Figure 1-37.—Dry filter cleaning.

For extremely oily filters, clean the filters with the compressed air or flush them with clean water. Soak and gently agitate the filter in a filter cleaning solution and lukewarm water. Rinse the filter thoroughly with clean water and then shake the excess water from the filter and allow it to airdry. Protect the filter from freezing, and keep a spare element to use while the washed one is drying.

After the filter is clean, inspect it for damage and check the filter gasket for damage. Before installing the filter, you must clean the inside of the air cleaner body thoroughly with a clean, damp rag.

NOTE: Consult the maintenance supervisor for approval before washing any filter elements with water. Additionally, never wash a dry element in fuel oil,

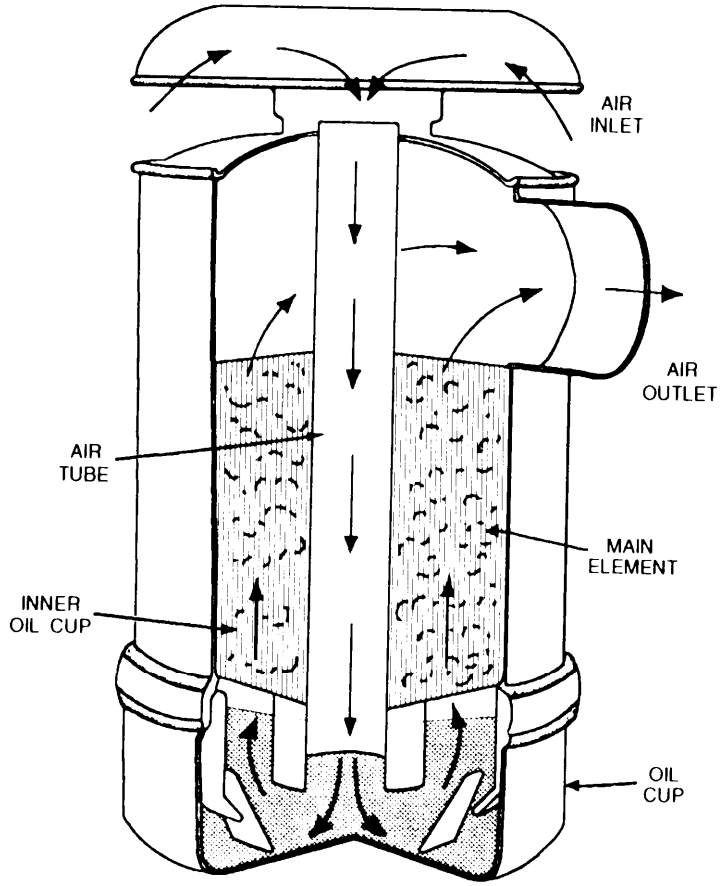

Figure 1-38.-Oil bath air cleaner.

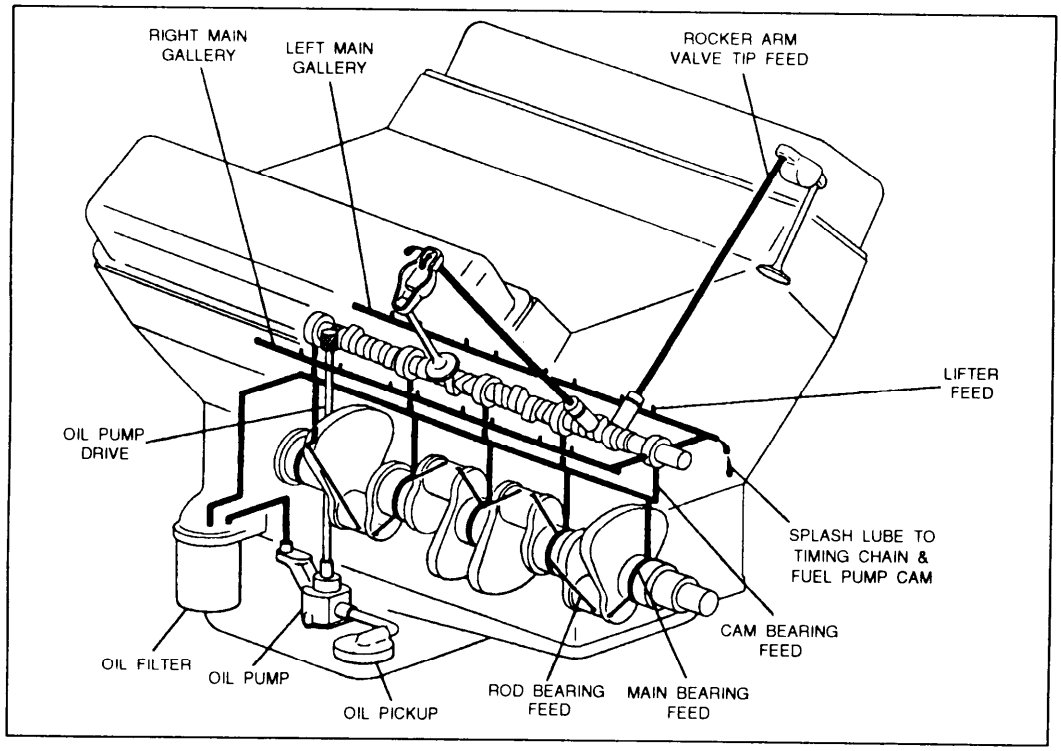

Figure 1-39.—Typical engine lubrication system.

gasoline, or solvent and never use compressed air to dry the element.

Oil Bath Air Cleaners

Oil bath air cleaners (fig. 1-38) draw air down a center tube where it strikes the surface of oil in the oil reservoir. As the air strikes the oil reservoir, most of the particles in the air do not make the 180-degree-upward turn. The dirt particles remain trapped in the oil. As the air continues upward and passes to the filter element, the smaller particles that bypassed the oil are trapped. The air keeps the filter element soaked with oil by creating a fine spray as it passes the reservoir. The air then makes another 180-degree turn and enters the intake system of the engine.

NOTE: It is the operator's responsibility to keep the oil cup filled to the proper level with the correct weight of oil and to document when the oil is dirty or has thickened, reducing its ability to clean particles from the air.

LUBRICATION SYSTEM

The engine lubrication system (fig. 1-39) reduces friction between moving parts, absorbs and dissipates heat, seals the piston rings and cylinder walls, cleans and flushes moving parts, and helps deaden the noise of the engine.

Checking the lubrication oils on a piece of equipment is part of the prestart check and the operator's responsibility. Also, it is a good professional practice to recheck the lube oil levels after a lunch break or during a crew turnover. The effort to check the lube oils is easier than explaining to the chain of command why an engine or part of the power train locked up or seized.

ENGINE OIL

Besides reducing friction and wear, engine oil acts as a cooling agent by absorbing heat from the surfaces over which it is spread. Engine oil carries heat to the engine sump where it is dissipated. The water circulating through an oil cooler also helps to reduce this heat (not all engines have oil coolers).

Engine oil is also used as a sealing agent. It fills the tiny openings between moving parts and cushions them against damage and distortion from extreme heat.

Engine oil is very important as a cleaning agent. Grit and dirt in engine parts are often removed by the oil before damage can result. The foreign matter and the greases in the bottom of the crankcase are evidence that engine oil cleans. Some oils have chemicals, known as additives, added to make them even better cleaners.

Oil Level Indicator

The oil level indicator consists of a rod, known as a dipstick. The dipstick extends through a tube into the crankcase (fig. 1-40). Marks on the dipstick indicate when the crankcase is full or, if low, how much oil is needed. To take readings, you should perform the following procedure: pull the dipstick out, wipe the dipstick with a rag, stick it back in, pull it out once again, and note how high the oil level is on it. On some engines, the correct oil level is achieved after the engine has

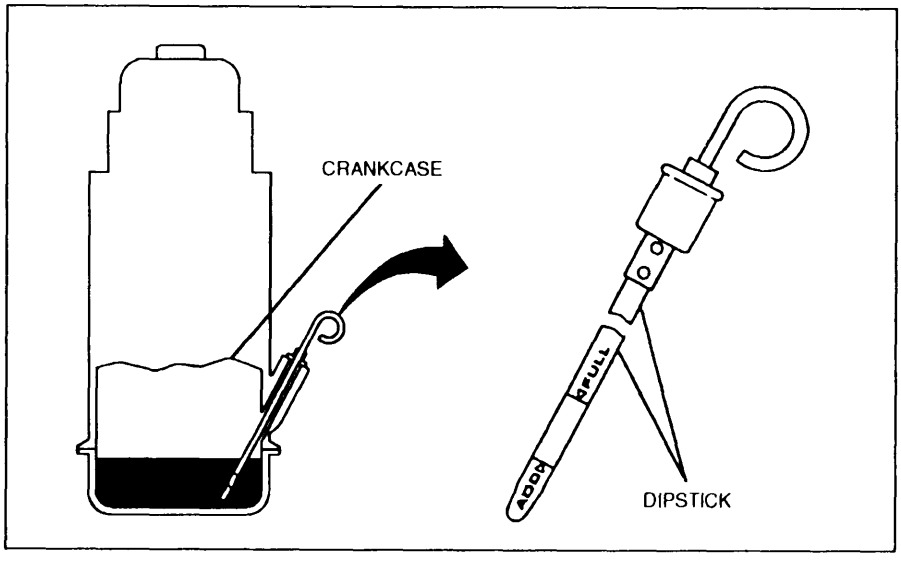

Figure 1-40.-Oil level indicator.

cycled a few minutes. However, it is a good practice to check to make sure there is oil in the crankcase, then follow the manufacturer's recommendations.

Oil Filters

The oil filter removes most of the impurities that were picked up by the oil as it circulated through the engine. Two types of filter element configurations are in use: the cartridge type and the sealed (spin-on) type (fig. 1-41).

CARTRIDGE FILTER.— The cartridge filter element fits into a permanent metal container. Oil is pumped under pressure into the container where it passes from the outside of the filter element to the center. From here the oil exits the container. The filter element is changed easily by removing the cover from the container.

SEALED (SPIN-ON) FILTER.— The sealed (spin-on) filter element is completely self-contained, consisting of an integral metal container and filter element. Oil is pumped into the container on the outside of the filter element. The oil then passes through the filter to the center of the element where it exits the container. This type of filter is screwed onto its base and is removed by spinning it off.

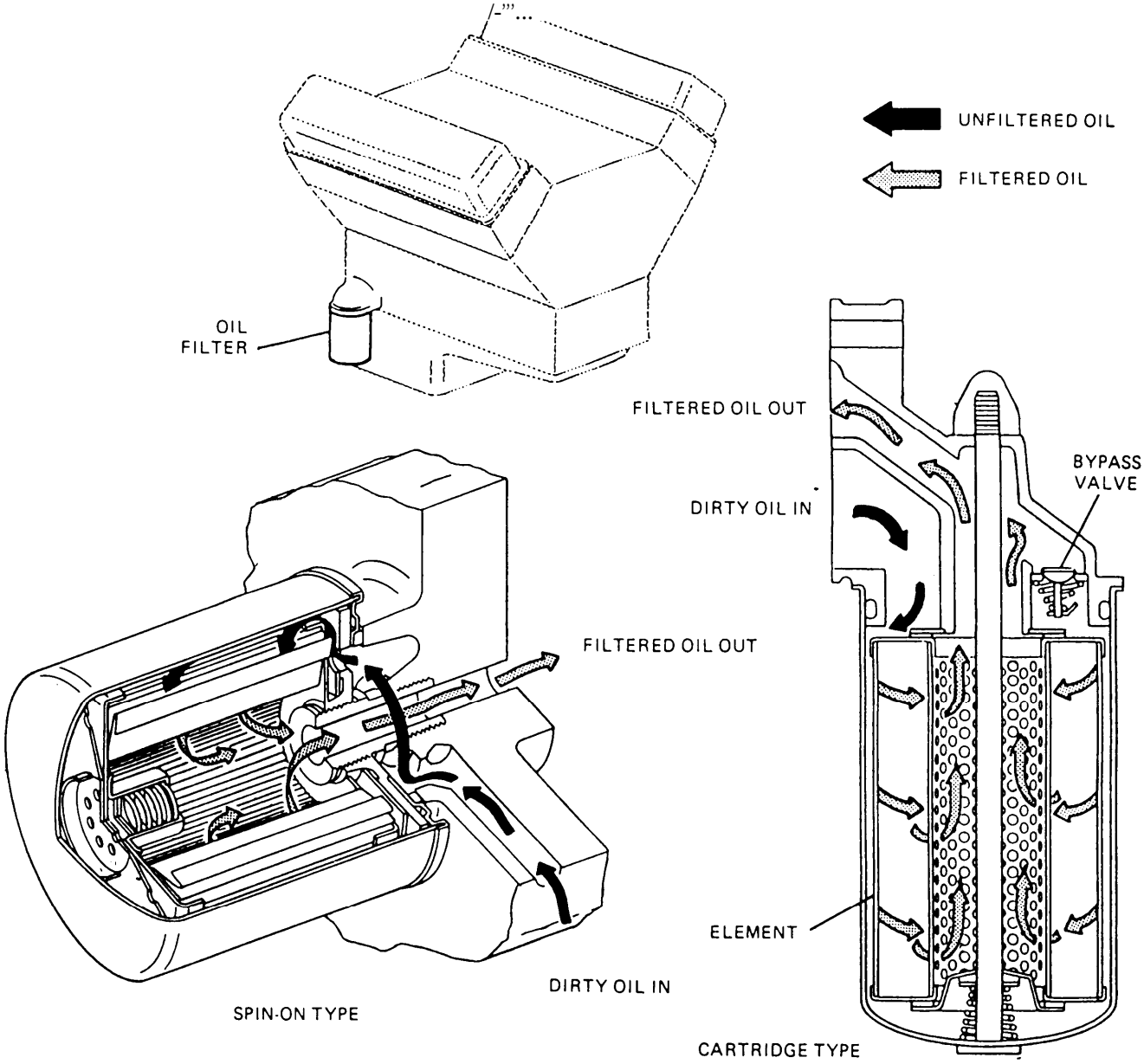

Figure 1-41.-Oil filters.

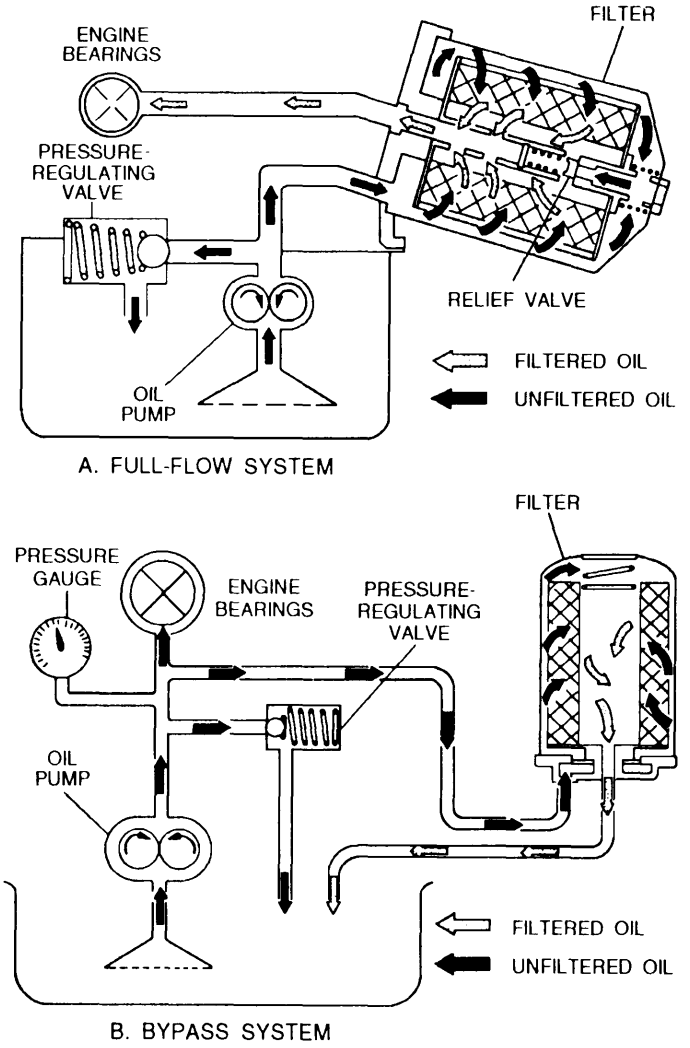

Figure 1-42.-Filter system configurations.

Filtering Systems

Two filter system configurations are in use today: the full-flow system and the bypass system.

FULL-FLOW SYSTEM.— All the oil in the full-flow system (fig. 1-42, view A) is circulated through the filter before it reaches the engine. When this system is used, it is necessary to incorporate a bypass valve in the oil filter. This valve allows the oil to circulate through the system without passing through the element in the event that it becomes clogged. This factor prevents the oil supply from being cut off from the engine.

BYPASS SYSTEM.— The bypass system (fig. 1-42, view B) diverts only a small quantity of the oil each time it is circulated and returns it directly to the oil pan after it is filtered. This type of system does not filter the oil before it is sent to the engine.

HYDRAULIC FLUID

On equipment, hydraulic fluids are used for hydraulic systems that steer, lift, push, close, and so forth. Hydraulic fluids that are currently in use include mineral oil, vegetable oil, water, phosphate ester, ethylene glycol compounds, and oil in water. The three most common types of hydraulic fluids are water base, petroleum base, and synthetic base.

NOTE: Before adding hydraulic fluid in a piece of equipment, consult the operator's manual for the type of hydraulic fluid required. Using the incorrect type can contaminate the hydraulic system which requires that the system be drained, flushed, and refilled with the correct fluid.

GEAR OIL

Gear oils are used in both manual transmissions and differentials. Gear oils reduce friction and do not break down or foam at high temperatures.

NOTE: Before adding gear oil, consult the operator's manual for the type of oil required for the specific type of equipment. Mixing different types of gear oil may cause the oil to break down and not have the quality required to protect the gears.

GREASE

Grease is used to lubricate bearings, bushings, and pivot points. For inaccessible bearings, grease is applied under pressure by the use of a grease gun (fig. 1-43).

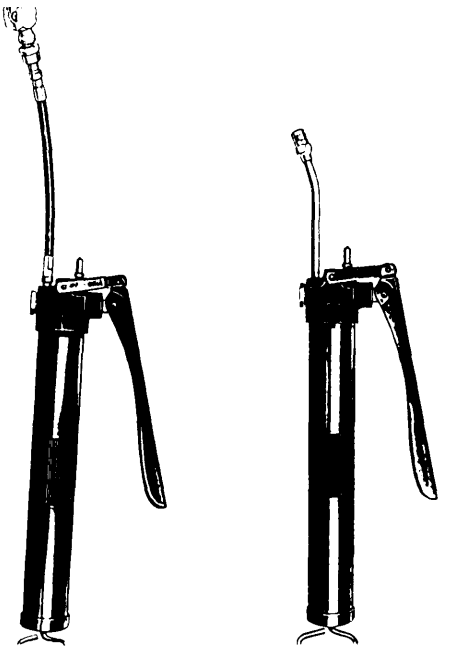

Figure 1-43.-Hand-operated grease gun.

When you are operating in dirty atmospheric conditions, grease seals out dust, dirt, and water from entering bearings and bushings.

Grease lube charts are either mounted on the equipment or are in the operator's manual. Grease lube charts state locations of grease fittings and how often the fittings should be lubricated. Over greasing of equipment blows seals and the excess grease collects sand and dirt that acts as a grinding compound on the lubricated surfaces. Under greasing allows excessive wear caused by metal-to-metal contact.

NOTE: Greasing equipment is the responsibility of the operator.

A water-resistant grease can prevent water from entering bearings and bushing joints. The grease commonly used on equipment is lithium-based. Lithium-based grease is water-resistant and has a wide range of operating temperatures. Care should be taken to keep grease clean. Always keep the grease container covered to prevent dirt and water from contaminating it.

ENGINE COOLING SYSTEMS

All internal combustion engines are equipped with some type of cooling system because of the high temperatures they generate during operation. The temperature in the combustion chamber during the burning of fuel is much higher than the melting point of iron. Therefore, if nothing is available to cool the engine during operation, valves burn and warp, lubricating oil breaks down, and bearings and pistons overheat resulting in engine seizure. At the same time, the engine must not be allowed to run too cold. An engine running cold does not burn all the fuel taken into the combustion chamber, causing carbon deposits to form that reduce fuel mileage, increase wear, and reduce engine power.

Three functions of the cooling system provide a satisfactory temperature operating range for the engine. First, the system removes the unwanted heat. Second, it regulates the engine temperature to keep it just right during all operating conditions. Third, when the engine is first started, the cooling system assists the engine in warming up to its normal operating temperature as soon as possible.

The two types of cooling methods are liquid cooling and air cooling. The liquid-cooling system is the most popular for automotive use, because it provides the most positive cooling and it maintains an even engine temperature. Air cooling is used for small vehicles and equipment; however, air cooling is not used if water cooling is practical. This is because air-cooled engines do not run at even temperatures and require extensive use of aluminum to dissipate heat.

Other means of heat dissipation for the engine, in addition to the cooling system, are as follows:

- The exhaust system dissipates as much, if not more, heat than the cooling system, although that is not its purpose.
- The engine oil removes heat from the engine and dissipates it to the air from the sump.
- The fuel provides some engine cooling through vaporization.
- A measurable amount of heat is dissipated as the air passes over the engine.

LIQUID-COOLING SYSTEM

A simple liquid-cooled cooling system consists of a radiator, water pump, hoses, fan and shroud, thermostat, and a system of jackets and passages in the cylinder head and cylinder block through which the coolant circulates (fig. 1-44). Cooling of the engine parts is accomplished by keeping the coolant circulating and in contact with the metal surfaces to be cooled. The pump draws the coolant from the bottom of the radiator, forces it through the jackets and passages, and ejects it into the upper tank on top of the radiator. The coolant then passes through a set of tubes to the bottom of the radiator from which the cooling cycle begins again. The radiator is situated in front of a fan that is driven either by the water pump or an electric motor. The fan ensures an air flow through the radiator at times when there is no vehicle motion.

Radiator

Most radiators have two tanks with a heat exchanging core between them. The upper tank contains an outside pipe, called an **inlet,** and on top is the **filler neck.** Attached to the filler neck is an outlet to the **overflow pipe.** The overflow pipe provides an opening from the radiator for escape of coolant or steam if pressure in the system exceeds the regulated maximum. This prevents rupture of cooling system components. The lower tank contains an outside pipe that serves as the outlet for the radiator.

The radiator is usually mounted in the front of the engine compartment so cool air can pass freely through the core. The outlet on the bottom radiator tank is connected to the water pump inlet. The top tank inlet of the radiator is connected to the outlet at the top of the engine. Rubber hoses and hose clamps are used to make

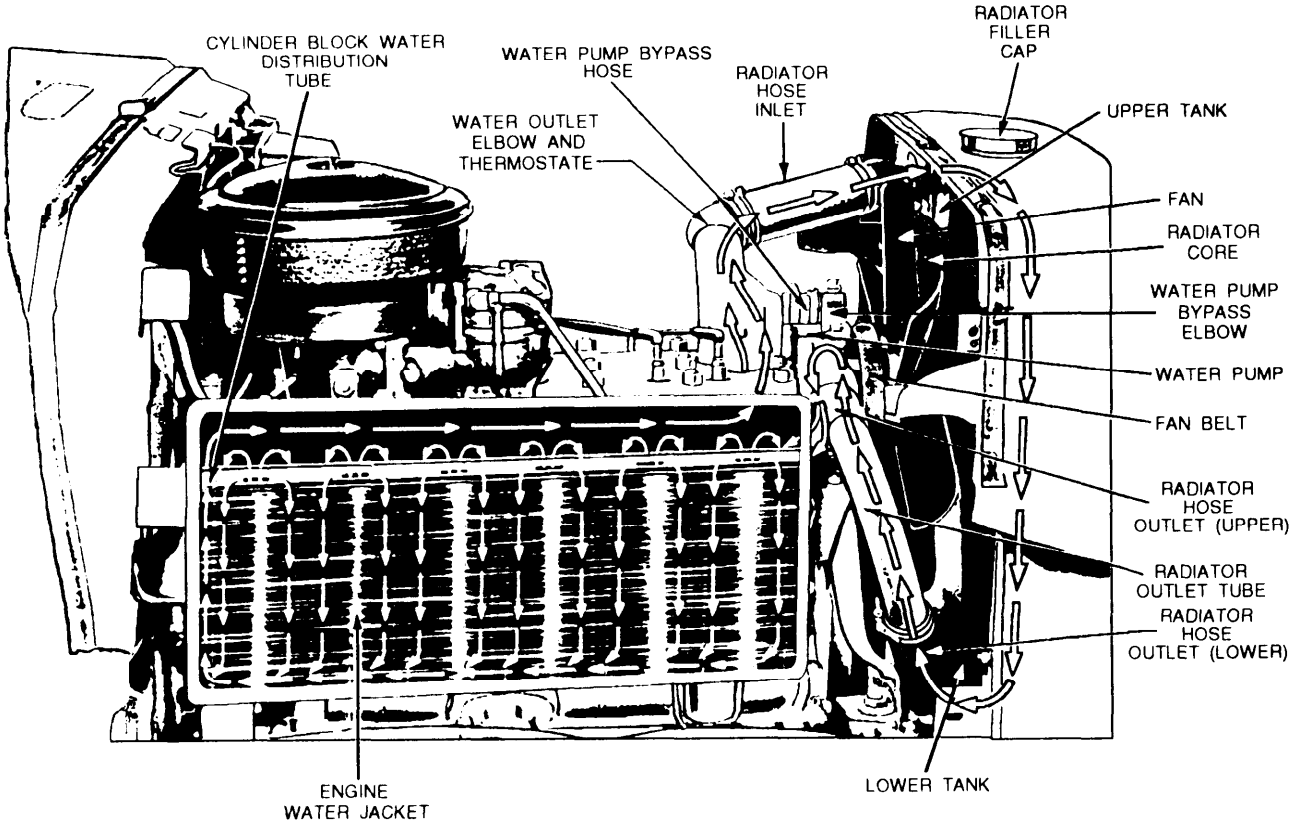

Figure 1-44.—Liquid-cooling system.

these connections to prevent engine vibrations from being transferred to the radiator.

When performing prestart checks on the radiator system, check for leaks, particularly where the tanks are soldered to the core, because vibration and pulsation from pressure can cause fatigue of soldered joints or seams. Bent fins should be straightened and the radiator core checked for any obstructions, tending to restrict the air flow. Radiator air passages can be cleaned by blowing them out with an air hose in the direction opposite to the ordinary flow of air. Water can also be used to soften obstructions before applying the air blast. In any event, the cleaning gets rid of dirt, bugs, leaves, straw, and other debris that would otherwise clog the radiator and reduce its cooling efficiency.

CAUTION

Spraying high-pressure water to soften an obstruction on the radiator can cause damage to the fins and core.

All hoses and tubing should be checked for leakage and general condition. The leakage may often be corrected by tightening or replacing the hose clamps. Deteriorated hoses should be replaced to preclude future troubles; for example, hoses sometimes rot on the inside, allowing tiny fragments to flow through the system and become lodged in the radiator, tending to clog it and cause overheating. For this reason, all old, cracked, or spongy hose should be replaced as soon as the condition is discovered during the prestart checks.

RADIATOR PRESSURE CAP.— The radiator pressure cap (fig. 1-45) is used on nearly all modern

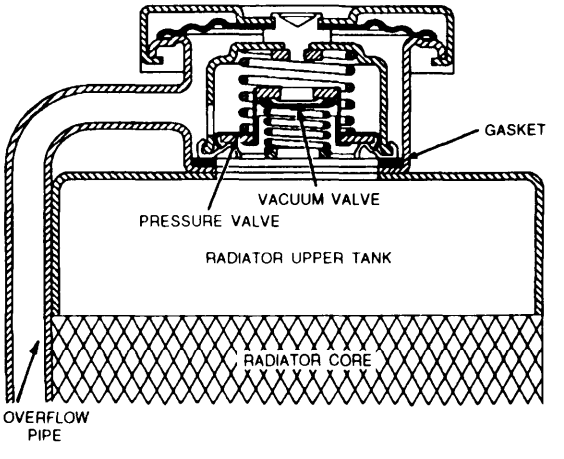

Figure 1-45.—Radiator pressure cap.

engines. The pressure cap closes off the overflow pipe and prevents loss of coolant during normal operation. It also allows a certain amount of pressure to develop within the cooling system. The pressure raises the boiling point of the coolant approximately 3 degrees for each pound and permits the engine to operate at higher temperatures without loss of coolant from boiling.

The pressure cap contains two spring-loaded valves. The larger valve is called the pressure valve and the smaller one is called the vacuum valve. A shoulder in the radiator filler neck provides a seat for the bottom of the cap assembly and a gasket on this seat prevents leakage between the cap and the filler neck.

The pressure valve acts as a safety valve to relieve extra pressure within the system. The cooling system may be designed to operate at various pressures between 4 and 17 psi, depending on the manufacturer's specifications. The pressure valve in the cap is preset by the manufacturer. When replacing a pressure cap, make sure you use a cap with the proper pressure setting that is usually marked on the top surface of the cap.

The vacuum valve opens only when the pressure within the cooling system drops below the outside air pressure as the engine cools down. This automatic action of the vacuum valve prevents collapse of the hoses and the radiator.

CAUTION

ALWAYS REMOVE THE RADIATOR CAP SLOWLY AND CAREFULLY. Removing the cap from a hot, pressurized radiator can cause serious burns from escaping steam and coolant.

COOLANT AND ANTIFREEZE.— Since water is easily obtained, is cheap, and has the ability to transfer heat readily, it has served as a basic coolant for many years. Some properties of water, such as the boiling point, freezing point, and natural corrosive action on metals, limit its usefulness as a coolant. This is counteracted by the use of an antifreeze. Manufactured under many different trade names, the most commonly used type of antifreeze is ethylene glycol. Ethylene glycol is a chemical compound composed of a mixture of ethylene and glycerine derivatives. Maximum freezing protection is achieved by mixing 60% ethylene glycol with 40% water. This mixture protects the cooling system to a temperature as low as minus 62°F. Ethylene glycol has a very high boiling point, does not evaporate easily, is noncorrosive, and is practically nonflammable.

WARNING

Because it has a sweet taste, animals and children sometimes ingest spilled coolant. The lead content that antifreeze absorbs while in use makes it a hazardous waste and it cannot be disposed of by being dumped on the ground. It must be containerized and turned in for disposal.

Water Pump

The water pump is the heart of the cooling system. Most engines use a centrifugal water pump (fig. 1-46) that provides a large volume capacity and is nonpositive in displacement. This type of pump has an impeller with blades that force the coolant outward as the impeller rotates. The shaft on which the impeller is mounted is usually driven by a fan belt and revolves in a bushing or in ball bearings inside the housing. For different cooling systems, pumps vary considerably in construction of seals, bearings, mounting, and drive.

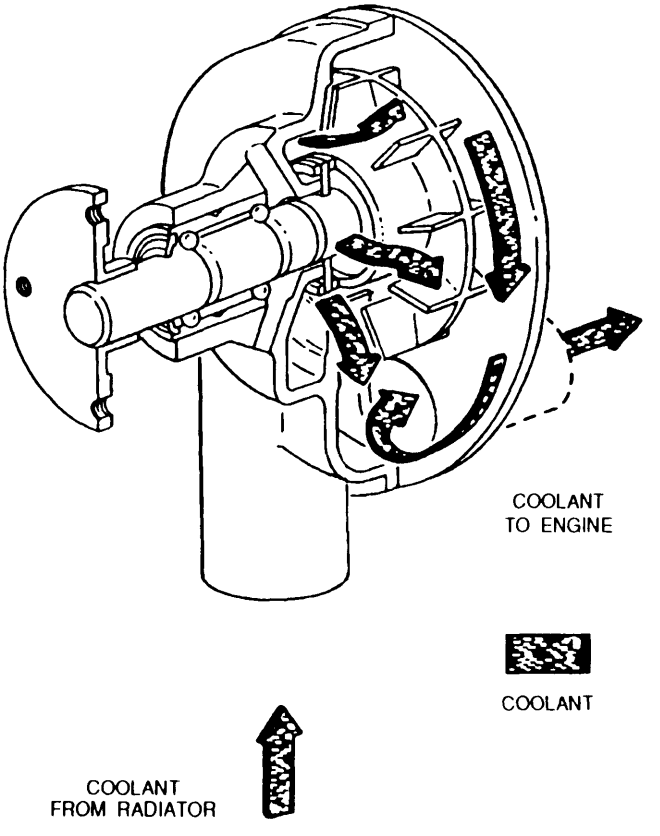

Figure 1-46.-Water pump.

Fan and Shroud

The engine fan is usually mounted on the end of the water pump shaft and is driven by the same belt that drives the pump. The fan pulls a large volume of air through the radiator core that cools the hot water circulating through the radiator. In addition to removing the heat from the water in the radiator, the flow of air created by the fan causes some direct cooling of the engine itself. On some construction equipment, such as dozers and track loaders, the fan blows air through the radiator vice pulling the air. Besides cooling the water, the blowing of air keeps sand, dirt, and debris out of the radiator. Some engines are equipped with a shroud that improves fan efficiency by assuring that all the air handled by the fan passes through the radiator.

Fan blades are spaced at intervals around the fan hub to aid in controlling vibration and noise. They are often curled at the tip to increase their ability to move air. Except for differences in location around the hub, most blades have the same pitch and angularity.

Bent fan blades are a common problem. They cause noise, vibration, and excess wear on the water pump shaft. Visual inspection of the fan blades, pulleys, pump shaft end play, and drive belts are part of your pre- and post-operational checks. A bent or distorted fan or one with a loose blade should be replaced. When the fan is merely loose on its mounting, tightening is in order. Loose fan belts can be adjusted for proper tension, usually by adjusting the generator or alternator on its mounting (fig. 1-47). A common method for measuring belt tension is to press down on the belt at a point midway between the generator or alternator and the fan pulley, and measure the amount of deflection. The amount of deflection varies and should be set to the manufacturer's specification. A rule of thumb used in the NCF for belt tension is no more than a one-half inch deflection.

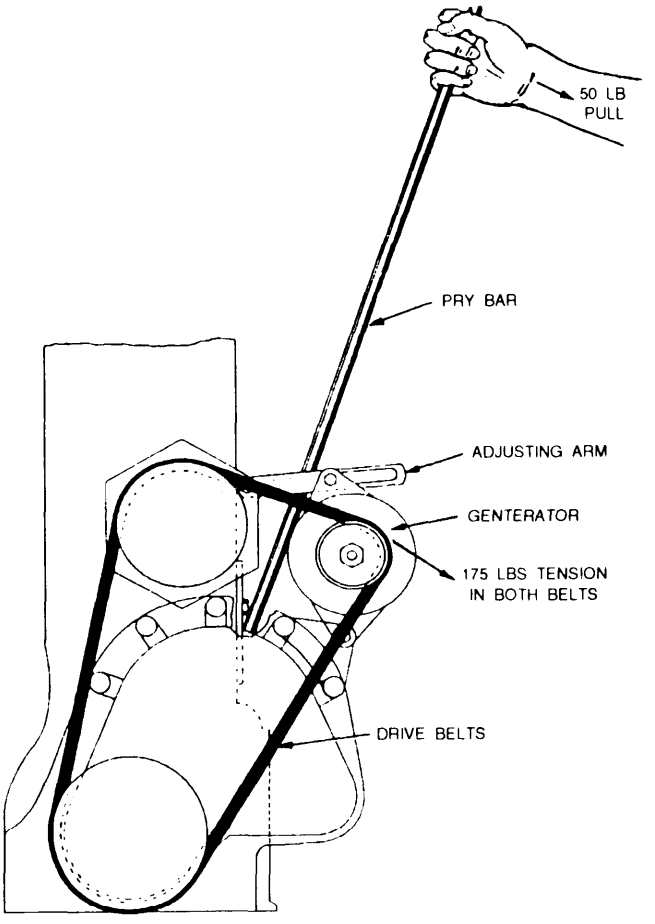

Figure 1-47.-Drive belt adjustment.

Water Jacket

The water passages in the cylinder block and cylinder head form the engine water jacket. The passages of the water jacket are designed to control circulation of coolant and provide proper cooling throughout the engine. In the cylinder block, the water jacket completely surrounds all cylinders along their full length. Water passages are also provided around the valve seats and hot parts of the cylinder block. In the cylinder head, the water jacket covers the combustion chambers at the top of the cylinders and contains passages around the valve seats when the valves are located in the head.

Thermostat

Automatic control of the temperature of an engine is necessary for efficient engine performance and economical operation. Since all engine parts are in a contracted state when cold, the engine temperature should be brought to normal as quickly as possible. The water pump starts coolant circulating the moment the engine is started, which is undesirable during cold weather operations. Coolant circulation is restricted by the installation of a thermostatically controlled valve, or thermostat, in the cylinder head water outlet. This valve allows coolant to circulate freely only within the block until the desired temperature is reached. This shortens the warm-up period. A bypass is used to direct the water

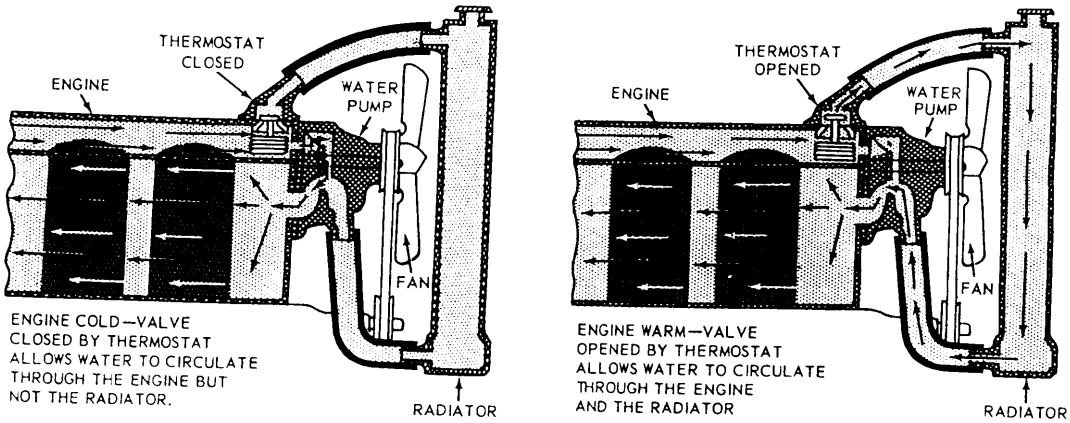

Figure 1-48.-Thermostat operation.

from the block to the pump when the passage to the radiator is blocked by the closed thermostat (fig. 1-48).

Some stationary engines and large trucks are equipped with shutters that supplement the action of the thermostat in providing a faster warmup and in maintaining proper operating temperatures. When the engine coolant is below a predetermined temperature, between 185°F to 195°F, the shutters, located in front of the radiator, remain closed and restrict the flow of air through the radiator. Then, as the coolant reaches proper temperature, the shutters start to open.

Overflow Tank

The overflow tank serves as a receptacle for coolant forced out of the radiator overflow pipe and provides for its return to the system. As the engine cools, the balancing of pressures causes the coolant to siphon back into the radiator.

Cooling systems using an overflow tank are known as closed cooling systems (fig. 1-49). Coolant is usually added to this system through the overflow tank that is marked for proper coolant level. **NEVER** remove the radiator cap located on the radiator unless you are positive the system is cold. If there is any pressure in the radiator, it will spray you with hot steam and coolant. Use extreme caution when performing operator's maintenance on a closed cooling system.

Expansion Tank

Some engines use an expansion tank in their cooling system (fig. 1-50). The tank is mounted in series with the upper radiator hose and is used to supply extra room for coolant expansion and generally takes the place of the upper radiator tank. The pressure cap and the overflow line are also mounted on the expansion tank.

AIR-COOLING SYSTEM

The simplest type of cooling is the air-cooled, or direct method, in which the heat is drawn off by moving air in direct contact with the engine. The rate of the cooling is dependent upon the area exposed to the cooling air, the heat conductivity of the metal used, the volume of the metal or its size in cross section, the amount of air flowing over the heated surfaces, and the difference in temperature between the exposed metal

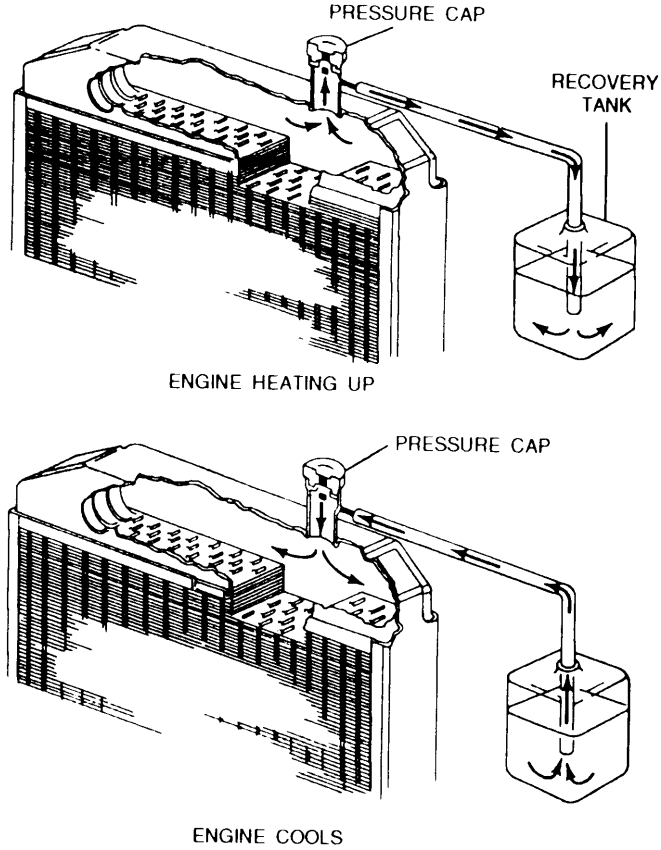

Figure 1-49.-Closed cooling system.

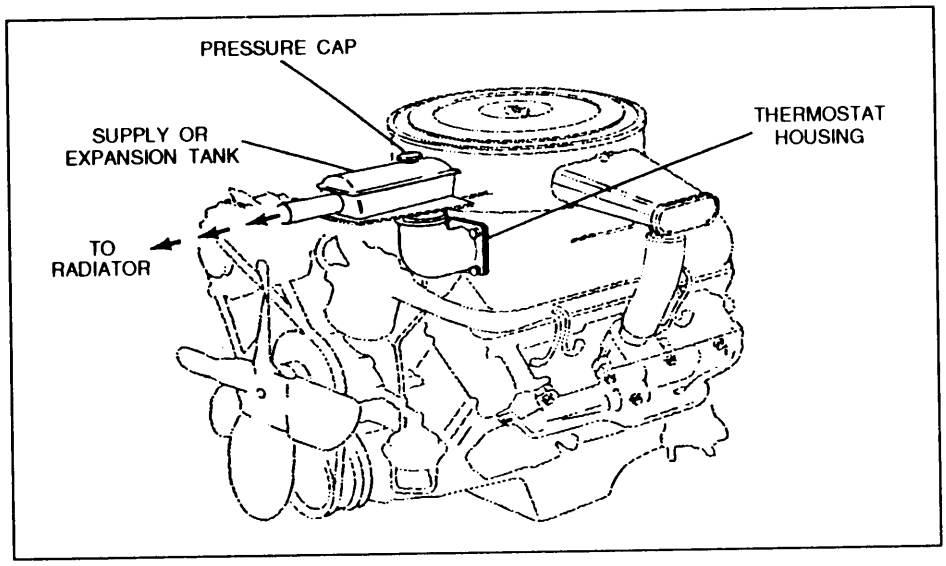

Figure 1-50.-Expansion tank.

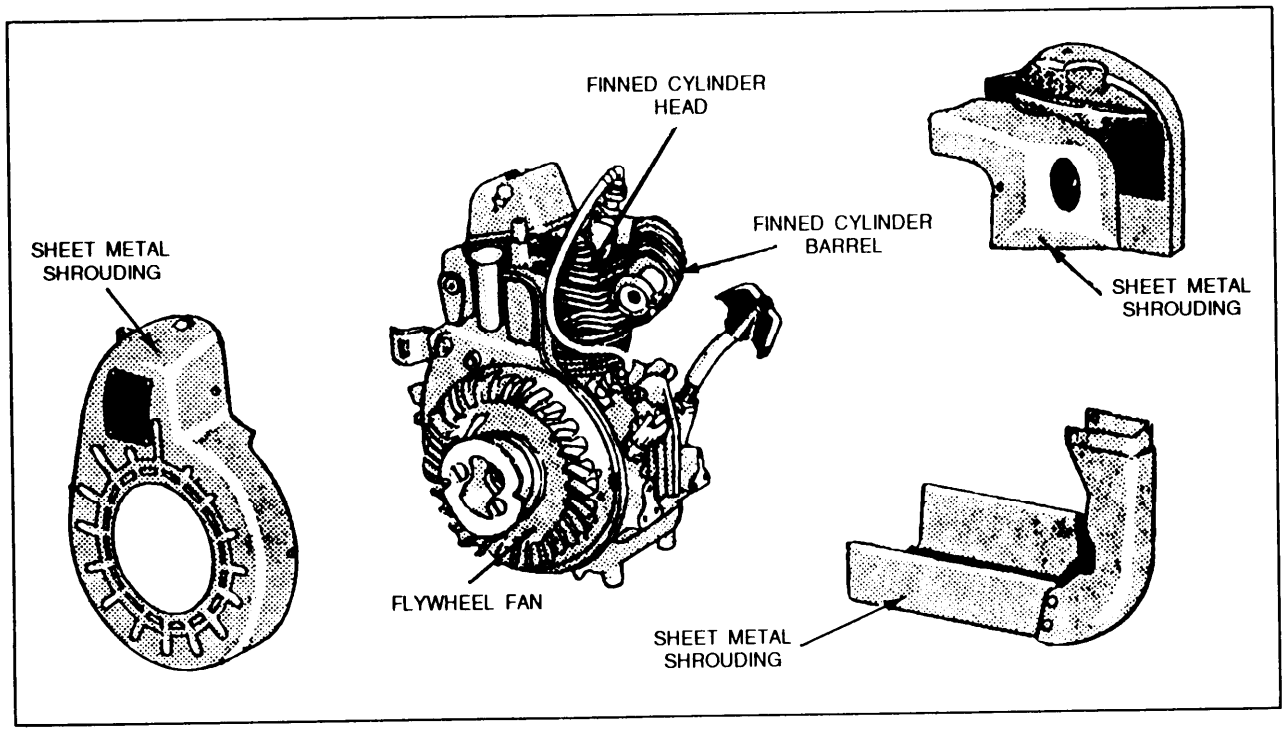

Figure 1-51.—Air-cooled engine.

surfaces and the cooling air. Some heat must be retained for efficient operation. This is accomplished by the use of thermostatic controls and mechanical linkage that open and close shutters to control the volume of cooling air. You will find that air-cooled engines generally operate at a higher temperature than liquid-cooled engines, whose operating temperature is largely limited by the boiling point of the coolant used. Consequently, greater clearances must be provided between the moving parts of air-cooled engines to allow for the increased expansion.

In air-cooled engines, the cylinders are mounted independently to the crankcase so that an adequate volume of air can circulate directly around each cylinder. The circulating air absorbs excessive amounts of heat from the cylinders and maintains enough cylinder head temperatures for satisfactory operation. The cooling action is based on the simple principle that the surrounding air is cooler than the engine heat. The primary components of an air-cooled system are the fan and shroud and the baffles and fins. A typical air-cooled engine is shown in figure 1-51.

Fan and Shroud

All stationary air-cooled engines must have fans or blowers of some type to circulate a large volume of cooling air over and around the cylinder. The fan for the air-cooled engine shown in figure 1-51 is built into the flywheel. When the engine is assembled, the shrouding, or cowling, forms a compartment around the engine so that the cooling air is properly directed for effective cooling. Air-cooled engines, such as those used on motorcycles and outboard engines, do not require the use of fans or shrouds, because their movement through the air creates a sufficient air flow over the engine for adequate cooling.

Baffles and Fins

In addition to the fan and shroud, some engines use baffles or deflectors to direct the cooling air from the fan to those parts of the engine not in the direct path of air flow. Most baffles are made of light metal and are semicircular with one edge in the stream of air. Most air-cooled engines use fins. These are thin, raised projections on the cylinder barrel and head. The fins provide more cooling area or surface and aid in directing air flow. Heat, resulting from combustion, passes by conduction from the cylinder walls and cylinder head to the fins and is carried away by the passing air.