CHAPTER 4

OXYGEN SYSTEMS

Terminal Objective: Upon completion of this chapter, you will be able to recognize the importance, characteristics, and uses of oxygen and identify oxygen systems, components, and their functions.

A dependable supply of oxygen is an essential element for the sustainment of life. Oxygen systems aboard naval aircraft sustain the lives of the pilot and aircrew so they can perform their missions. AME personnel service and maintain aircraft oxygen systems. Therefore, it is very important that AME personnel understand how and why oxygen systems function as they do. This chapter provides an overview of the operating characteristics and maintenance requirements for several specific aircraft oxygen systems, stressing safety and the use of the applicable Maintenance Instructions Manual (MIM).

IMPORTANCE OF OXYGEN

Learning Objective: Recognize the importance of oxygen to include types, characteristics, and the effects of a lack of oxygen.

No one can live without sufficient quantities of food, water, and oxygen. Of the three, oxygen is by far the most urgently needed. If necessary, a well-nourished person can go without food for many days or weeks, living on what is stored in the body. The need for water is more immediate but still will not become critical for several days. The supply of oxygen in the body is limited to a few minutes. When that supply is exhausted, death is inevitable.

Oxygen starvation affects a pilot or aircrewman in much the same way that it affects an aircraft engine. Both the body and the engine require oxygen for the burning of fuel. An engine designed for low-altitude operation loses power and performs poorly at high altitudes. High-altitude operation demands a means of supplying air at higher pressure to give the engine enough oxygen for the combustion of fuel. A supercharger or compressor satisfies the engines demands. What about the demands of the human body?

The combustion of fuel in the human body is the source of energy for everything the aviator is required to do with muscles, eyes, and brain. As the aircraft climbs, the amount of oxygen per unit of volume of air decreases, and the aviator's oxygen intake is reduced. Unless the aviator breathes additional oxygen, the eyes, brain, and muscles begin to fail. The body is designed for low-altitude operation and will not give satisfactory performance unless it is supplied the full amount of oxygen that it requires. Like the engine, the body requires a means of having this oxygen supplied to it in greater amounts or under greater pressure. This need is satisfied by use of supplemental oxygen supplied directly to the respiratory system through an oxygen mask, and by pressurizing the aircraft to a pressure equivalent to that at normal safe-breathing altitudes, or both.

For purposes of illustration, an aviator's lungs are like a bag of air since the air in the lungs behaves in the same way. If an open bag is placed in an aircraft at sea level, air will escape from it continuously as the aircraft ascends. The air pressure at 18,000 feet is only half that at sea level; therefore, at 18,000 feet the bag will be subjected to only half the atmospheric pressure it was subjected to at sea level. For this reason, it will contain only half the oxygen molecules it had when on" the ground. In like fashion, an aviator's lungs contain less and less air as he/she ascends and correspondingly less oxygen. Thus, the use of supplemental oxygen is necessary on high-altitude flights.

Up to approximately 35,000 feet, an aviator can keep sufficient oxygen in his/her lungs to permit normal activity by use of oxygen equipment that supplies oxygen upon demand (inhalation). The oxygen received by the body on each inhalation is diluted with decreasing amounts of air up to approximately 33,000 feet. Above 33,000 feet and up to approximately 35,000 feet, this equipment provides 100-percent oxygen. At approximately 35,000 feet, inhalation through the DEMAND oxygen system alone will NOT provide enough oxygen.

Above 35,000 feet and up to about 43,000 feet, normal activity is only possible by use of PRESSURE DEMAND equipment. This equipment consists of a "supercharger" arrangement by which oxygen is supplied to the mask under a pressure slightly higher than that of the surrounding atmosphere. Upon inhalation, oxygen is forced (pressured) into the mask by the system. Upon exhalation the oxygen pressure is shut off automatically so that carbon dioxide can be expelled from the mask. Above 43,000 feet, the only adequate provision for the safety of the aviator is pressurization of the entire body.

TYPES OF OXYGEN

Aviators breathing oxygen (MIL-0-2721OD) is supplied in two types—type I and type II. Type I is gaseous oxygen and type II is liquid oxygen. Oxygen procured under this specification is required to be 99.5 percent pure. The water vapor content must not be more than 0.02 milligrams per liter when tested at 21.1°C (70°F) and at sea-level pressure.

Technical oxygen, both gaseous and liquid, is procured under specification BB-O-925A. The moisture content of technical oxygen is not as rigidly controlled as is breathing oxygen; therefore, the technical grade should never be used in aircraft oxygen systems.

The extremely low moisture content required of breathing oxygen is not to avoid physical injury to the body, but to ensure proper operation of the oxygen system. Air containing a high percentage of moisture can be breathed indefinitely without any serious ill effects. The moisture affects the aircraft oxygen system in the small orifices and passages in the regulator. Freezing temperatures can clog the system with ice and prevent oxygen from reaching the user. Therefore, extreme precautions must be taken to safeguard against the hazards of water vapor in oxygen systems.

CHARACTERISTICS OF OXYGEN

Oxygen, in its natural state, is a colorless, odorless, and tasteless gas. Oxygen is considered to be the most important of all the elements to life. It forms about 21 percent of the atmosphere by volume and 23 percent by weight. The remainder of the atmosphere consists of nitrogen (78 percent) and inert gases (1 percent), of which argon is the most abundant.

Of all the elements in our environment, oxygen is the most plentiful. It makes up nearly one-half of the earth's crust and approximately one-fifth of the air we breathe.

Oxygen combines with most of the other elements. The combining of an element with oxygen is called oxidation. Combustion is simply rapid oxidation. In almost all oxidations, heat is given off. In combustion, the heat is given off so rapidly it does not have time to be carried away; the temperature rises extremely high, and a flame appears.

Some examples of slow oxidation are rusting of iron, drying of paints, and the change of alcohol into vinegar. Even fuels in storage are slowly oxidized, the heat usually being rapidly carried away. However, when the heat cannot easily escape, the temperature will rise and a fire may break out. This fire is the result of spontaneous combustion.

Oxygen does not burn, but it does support combustion. Nitrogen neither burns nor supports combustion. Therefore, combustible materials burn more readily and more vigorously in oxygen than in air, since air is composed of about 78 percent nitrogen by volume and only about 21 percent oxygen.

In addition to existing as a gas, oxygen can exist as a liquid and as a solid. Liquid oxygen is pale blue in color. It flows like water, and weighs 9.52 pounds per gallon.

EFFECTS OF LACK OF OXYGEN

A decrease in the amount of oxygen per unit volume of air results in an insufficient amount of oxygen entering the bloodstream. The body reacts to this condition rapidly. This deficit in oxygen is called HYPOXIA. When the body regains its normal oxygen supply, one may recover from hypoxia. A complete lack of oxygen, which results in permanent physical damage or death, is called ANOXIA.

Hypoxia

Most people are not aware of the body's enormous increase in oxygen requirements caused by an increase in physical activity. Strenuous exercise like cross-country running results in a greatly increased need for oxygen, which is evidenced by deep and rapid breathing. Even mild exercise like getting up and walking around a room may double the air intake. In the case of the aviator, leaking of an oxygen mask, which may go completely unnoticed while the wearer is at rest, may lead to collapse and unconsciousness when an attempt is made to move from one station to another in the aircraft. A walkaround (portable) oxygen bottle sufficient for 24 minutes of quiet breathing maybe emptied by 17 minutes of use when the user is moving around inside the aircraft.

Effects of Hypoxia

People differ in their reactions to hunger, thirst, and other sensations. An individual's reactions vary from time to time under similar circumstances. Illness, pain, fear, excessive heat or cold, and many other factors govern what the response will be in each particular case. The same thing is true of individual reactions to oxygen starvation. The effects of hypoxia on a given person cannot be accurately predicted. For example, a person may be relatively unaffected one day, but highly susceptible the next.

It is difficult to detect hypoxia, because its victims are seldom able to judge how seriously they are affected, or if they are affected at all. The unpleasant sensations experienced in suffocation are absent in the case of hypoxia. Blurring of vision, slight shortness of breath, a vague, weak feeling, and a little dizziness are the only warnings. Even these may be absent or. so slight as to go unnoticed.

While still conscious, the aviator may lose all sense of time and spend his/her last moments of consciousness in some apparently meaningless activity. In such a condition, a person is a menace to the crew as well as to the himself. Since the aviator understands that it is the reduced air pressure at higher altitudes that determines the effect on the body, dependence should be upon the altimeter rather than sensations or judgment to determine when oxygen is needed. The effects of hypoxia at various altitudes are discussed in the following paragraphs.

BELOW 10,000 FEET.— At or below 10,000 feet, some effects of hypoxia may be present. Generally, the eye is the first part of the body to suffer effects of hypoxia. Even at a relatively low altitude of approximately 5,000 feet, where no other effect of hypoxia can be detected, night vision is appreciable reduced. At 10,000 feet, night operations may be seriously handicapped by poor night vision, which is due to mild oxygen starvation. Thus, the use of supplemental oxygen on night flights above 5,000 feet is required. Although hypoxia affects the eyes in the daytime as well as at night, the results during the day are usually not as noticable below 10,000 feet.

BETWEEN 10,000 AND 15,000 FEET.— Although efficiency may be considerably impaired at 10,000 to 15,000 feet, death from oxygen starvation at these altitudes is virtually unknown. The greatest dangers are from errors in judgment or performance due to drowsiness or mental confusion. At these altitudes, long flights without oxygen produce persistent drowsiness and excessive fatigue for many hours afterward. Frequently, persistent headaches develop soon after completion of the flight. For these reasons, the use of oxygen on flights above 10,000 feet is required. Portable oxygen systems are available for aircraft that do not have oxygen equipment.

BETWEEN 15,000 AND 20,000 FEET.— Flights at 15,000 to 20,000 feet, even for short periods, must not be attempted without the use of oxygen. Collapse and unconsciousness are common. Failure to use oxygen could result in death, especially when the situation is complicated by loss of blood in combat or by shock due to pain or fear.

BETWEEN 20,000 AND 25,000 FEET.— During World War II, most military flying was done in unpressurized aircraft at altitudes of between 20,000 and 25,000 feet. Most of the resulting anoxia deaths occurred in this altitude range. The general symptoms of drowsiness, mental confusion, dim vision, and dizziness occur here, as at lower altitudes, but they come on much more quickly, allowing less opportunity for corrective action. Consequently, under no circumstances should aircraft ascend to these altitudes, even for short periods, without the use of oxygen by all persons aboard. The movement of personnel in the aircraft requires the constant use of walkaround equipment. Unusual actions or failure of a crew member to respond quickly

and clearly, when called, require immediate investigation.

BETWEEN 25,000 AND 30,000 FEET.— Between 25,000 and 30,000 feet, collapse, unconsciousnes, and death quickly follow interruption of the oxygen supply. Mask leakage at these altitudes may cause a degree of hypoxia that, although not noticed during flight, can produce considerable fatigue and have serious cumulative effects.

ABOVE 30,000 FEET.— Above 30,000 feet, unconsciousness and death strike rapidly and often without warning. At such altitudes, it is imperative that all oxygen equipment be functioning correctly and that each breath be taken through a properly fitted oxygen mask. Above a pressure altitude of 35,000 feet, pressure breathing oxygen equipment is required.

GASEOUS OXYGEN SYSTEMS

Learning Objective: Identify safety precautions, components, typical systems, and maintenance procedures for gaseous oxygen systems.

Gaseous oxygen systems are used primarily in large, multiplace aircraft where space and weight limitations are less important items and the systems are used only periodically.

HANDLING/SAFETY PRECAUTIONS

The pressure in gaseous oxygen supply cylinders should not be allowed to fall below 50 psi. If the pressure falls much below this value, moisture is likely to accumulate in the cylinder and could be introduced into the oxygen system of the aircraft, causing component malfunction.

All oxygen under pressure is potentially very dangerous if handled carelessly. Personnel servicing or maintaining oxygen systems and components must be meticulously careful about preventing grease, oil, hydraulic fluid, or similar hydrocarbons as well as other contamination from coming in contact with lines, hoses, fittings, and equipment as this contact presents a fire and explosion hazard.

If, because of hydraulic leaks or some other unpreventable malfunction, components of the oxygen system do become externally contaminated, they should be cleaned using only approved oxygen system cleaning compounds. While some MIMs specify the use of a variety of cleaning compounds, the preferred compound is oxygen system cleaning compound conforming to Military Specification MIL-C-8638 or ultra clean solvent cleaning compound (type I, trichlorotrifluoroethane) conforming to Military Specification MIL-C-81302B.

The following safety precautions should be adhered to:

- Under no circumstances should a non-approved cleaning compound be used on any oxygen lines, fittings, or components.

- When handling oxygen cylinders, the valve protection cap should always be in place. Before removing the cap and opening the valve, ensure that the cylinder is firmly supported. A broken valve may cause a pressurized cylinder to be propelled like a rocket.

- Do NOT use oxygen in systems intended for other gases or as a substitute for compressed air.

- Cylinders being stored for use on gaseous oxygen servicing trailers or any other use must always be properly secured. Do not handle cylinders or any other oxygen equipment with greasy hands, gloves, or other greasy materials. The storage area should be located so that oil or grease from other equipment cannot be accidentally splashed or spilled on the cylinders.

Additional safety precautions may be found in the publications technical manual NAVAIROSH Requirements for the Shore Establishment, NAVAIR A1-NAOSH-SAF-000/P-5100; Aviators Breathing Oxygen (ABO) Surveillance Program Laboratory Manual and Field Guide, A6-332A0-GYD-000; Aviation-Crew System, Oxygen Equipment, NAVAIR 13-1-6.4.

SYSTEM COMPONENTS

Basically, all gaseous oxygen systems consist of the following:

1. Containers (cylinders) for storing the oxygen supply
2. Tubing to route the oxygen from the main supply to the user(s)
3. Various valves for directing the oxygen through the proper tubing

4. A metering device (regulator) to control the flow of oxygen to the user

5. A gauge(s) for indicating the oxygen pressure

6. A mask to direct the oxygen to each user's respiratory system

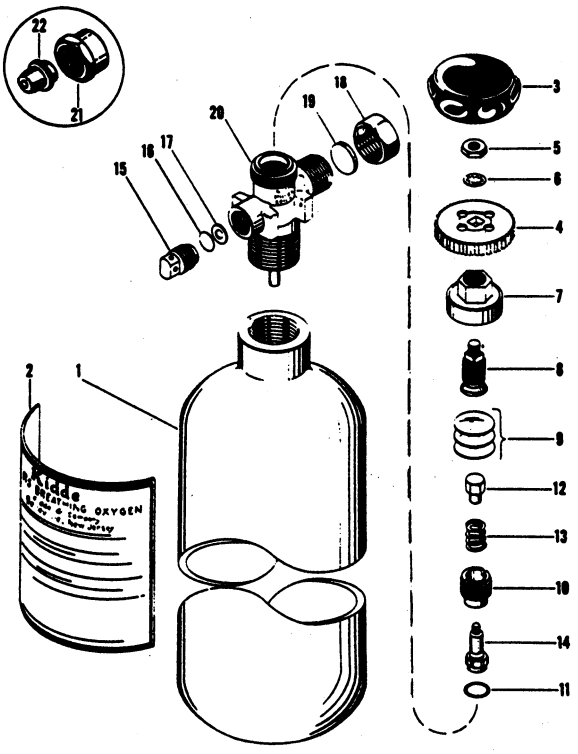

1. Cylinder
2. Label—Instruction on Walter Kidde cylinders
3. Handgrips
4. Handwheel
5. Nut, handwheel
6. Washer, lock extension teeth, bronze, No. 10
7. Caps, valve
8. Stem, upper
9. Diaphragm (set of 3)
10. Bushing
11. Gasket, bushing
12. Cap, spindle
13. Spring
14. Seat, valve
15. Plug, safety
16. Disc, safety
17. Washer, safety disc
18. Cap, outlet
19. Washer, outlet cap
20. Body, valve
21. Nut, coupling
22. Nose, coupling

Figure 4-1.—Gaseous oxygen cylinder and handwheel valve assembly.

Cylinders

Gaseous oxygen cylinders used in naval aircraft systems are generally high-pressure, nonshatterable cylinders. The term *shatterproof* or *nonshatterable* indicates that the cylinder is designed to resist shattering when punctured by a foreign object, such as gunfire, at a pressure of 1,800 psi. The resistance to shattering is generally achieved by the use of a heat-treated alloy or wire wrapping applied to the outside of the cylinder. The two most common cylinder sizes are 514 and 295 cubic inches.

The main advantage of the high-pressure cylinder is that it minimizes space used for storing gaseous oxygen. All high-pressure oxygen cylinders are painted green in accordance with the established color codes provided in MIL-STD-101A.

Cylinders come equipped with either a manually operated handwheel valve or an automatic self-opening valve (figs. 4-1 and 4-2). Opening the handwheel operated valve assembly releases the contents of the cylinder. The handwheel has four 5/15-inch diameter holes for the attachment of remote-operation equipment, if needed.

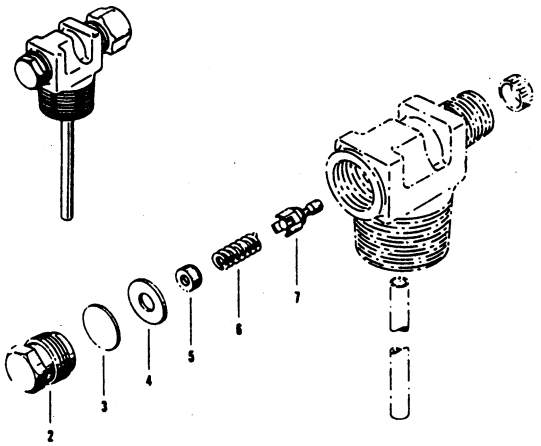

1. Self-opening high-pressure oxygen valve assembly
2. Safety plug assembly
3. Safety disc
4. Disc washer
5. Spring nest
6. Spring
7. Assembly check

Figure 4-2.—Self-opening oxygen cylinder valve.

The valve is equipped with a fusible metal safety plug and a safety disc to release the contents of the cylinder if the pressure becomes excessive because of high temperatures. The safety plug is filled with a fusible metal designed to melt at temperatures ranging from 208° to 220°F (97.8° to 104.5°C).

The cylinder and valve assembly is connected to the oxygen tubing by silver soldering the tubing to a coupling nose and securing the nose to the valve outlet with a coupling nut.

The self-opening (automatic) oxygen cylinder valve is automatically opened when it is connected to the oxygen line. The use of this type of valve permits remote location of the oxygen cylinder to places less vulnerable during combat and more readily accessible for servicing.

Regulators

The success or failure of high-altitude flight depends primarily on the proper functioning of the oxygen breathing regulator. Acting as a metering device, the regulator is the heart of the oxygen system. To perform successfully in an aircraft system, a regulator must deliver the life-supporting oxygen in the quantities demanded throughout its entire range of operation.

Although personnel of the PR rating are primarily responsible for maintenance of regulators, the AME is responsible for performing operational checks in the aircraft and for removal and installation. In other words, the AME removes a malfunctioning regulator from the aircraft and delivers it to the shop where the PR determines the trouble and makes the necessary repairs. When the trouble is corrected, the AME reinstalls the regulator in the aircraft.

Tubing

Two types of tubing are used in aircraft oxygen systems. Low-pressure aluminum alloy tubing is used in lines carrying pressures up to 450 psi. High-pressure copper tubing is used in lines carrying pressure above 450 psi.

NOTE: Some of the newer naval aircraft are equipped with high-pressure oxygen lines made of aluminum alloy.

Lines running from the filler valve to each of the cylinders are called filler lines. Those running from the cylinders to the regulators are called distribution or supply lines.

Oxygen lines, like all other lines in the aircraft, are identified by strips of colored tape. The strips of tape are wrapped around each line near each fitting and at least once in each compartment through which the line runs. The color code for oxygen lines is green and white with the words *Breathing Oxygen* printed in the green portion, while black outlines of rectangles appear in the white portion.

Resistance to fatigue failure is an important factor in oxygen line design because the line pressure in a high-pressure system will at times exceed 1,800 psi, and at other times be as low as 300 psi. Because of these varying pressures and temperatures, expansion and contraction occur all the time. These fluctuations cause “metal fatigue,” which must be guarded against in both the design and the construction specifications for tubing. Steps are taken during installation to prevent fatigue failure of the tubing. Tubing is bent in smooth coils wherever it is connected to an inflexible object, like a cylinder or a regulator. Every precaution is taken to prevent the accidental discharge of compressed oxygen because of faulty tubing or installation. Although simple in construction and purpose, tubing is the primary means by which oxygen is routed from the cylinders to the regulator stations.

High-pressure tubing is usually seamless copper tubing, and is manufactured in accordance with strict specifications. It has an outside diameter of 3/16 inch and a wall thickness of 0.035 inch. For application in high-pressure oxygen installations, copper tubing is type N (soft annealed), and is pressure tested at not less than 3,000 psi.

High-pressure tubing is used between the oxygen cylinder valve and the filler connection in all systems, between the cylinder valve and the regulator inlet in high-pressure systems, and between the cylinder valve and pressure reducer in reduced high-pressure systems.

To connect high-pressure copper tubing, adapters and fittings are silver soldered to the tubing ends. Due to the high pressures involved, the security (leak tightness) of all high-pressure lines relies primarily on a metal-to-metal contact of all its fittings and connections. A fitting properly silver soldered to the end of a length of copper tubing will not come loose or leak.

Some of the later models of naval aircraft use aluminum alloy or stainless steel tubing in high--pressure oxygen system installations. Replacement tubing should be manufactured of the same type

material as the original tubing or a suitable substitute as specified in the MIM.

Valves

Various types of valves are installed in gaseous oxygen systems. Among the most commonly used are check valves, pressure-reducing valves, and filler valves.

CHECK VALVES.— Check valves are installed at various points in the oxygen system. Their purpose is to permit the flow of oxygen in one direction only. Check valves are located in the system to prevent the loss of the entire oxygen supply in the event a cylinder or line is ruptured.

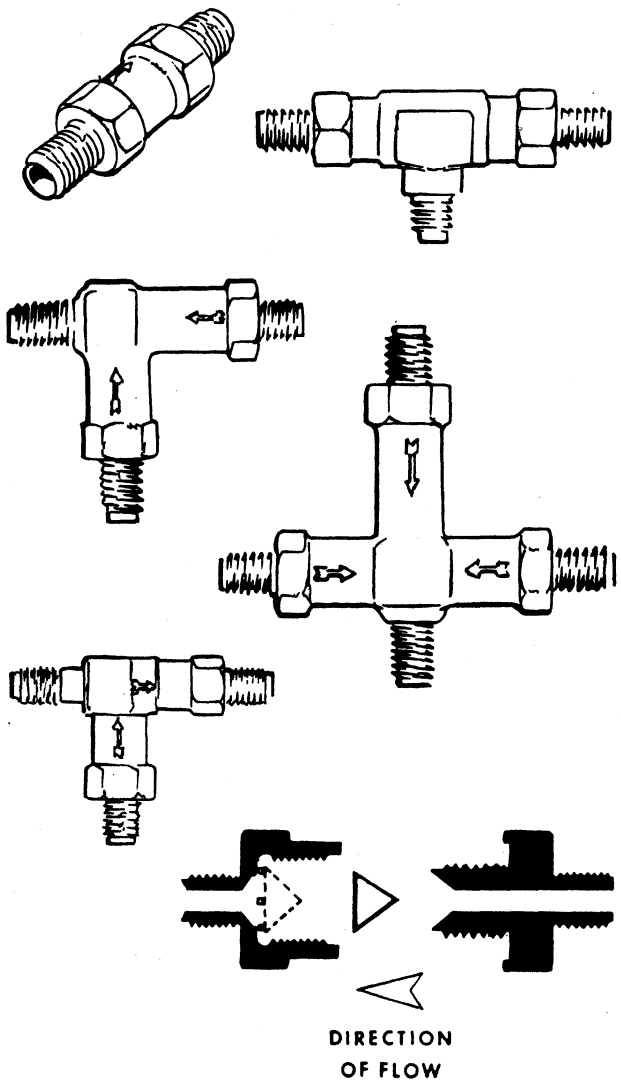

Figure 4-3.—Oxygen system check valves.

Various styles of single, dual, and triple check valves are available, as shown in figure 4-3. The arrow (or arrows) embossed on the valve casting indicates the direction of flow through the valve.

PRESSURE-REDUCING VALVES.— Pressure-reducing valves (or pressure reducers) are used in certain oxygen systems for the purpose of reducing high cylinder pressure to a working low pressure. In most installations the pressure reducers are designed to reduce the pressure from 1,800 psi to a working pressure of 60 to 70 psi. They are always located in the oxygen distribution lines between the cylinders and the flight station outlets. Figure 4-4 illustrates a typical pressure-reducing valve.

FILLER VALVES.— A11 oxygen systems are designed so the entire system can be serviced (refilled) through a common filler valve. The filler valve is generally located so it may be reached by a man standing on the ground or wing. The filler valve contains a check valve, which opens during the filling operation and closes when filling is completed. A dust cap keeps out dust, dirt, grease, and moisture.

Gauges

Gauges are used in gaseous oxygen systems to indicate the oxygen pressure in pounds per square inch (psi). All systems are equipped with at least one gauge that indicates the amount of oxygen in the cylinder(s). The gauge also indicates indirectly how much longer the oxygen will last.

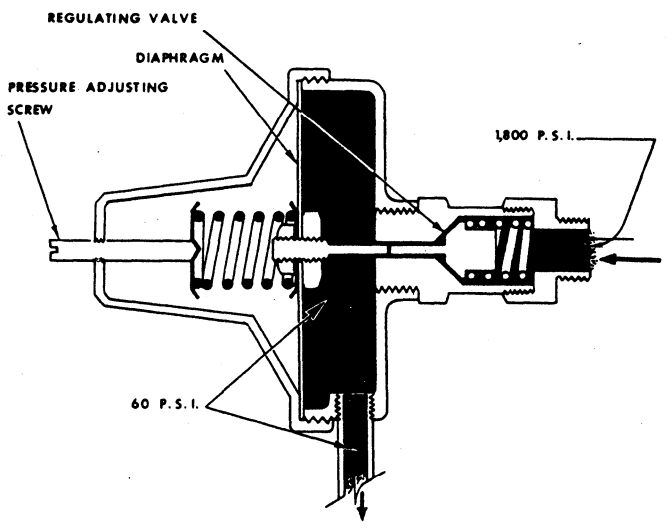

Figure 4-4.—Pressure-reducing valve.

The volume of any gas compressed in a cylinder is directly proportional to the pressure. If the pressure is half, the volume is half, etc. Therefore, if 900 psi of oxygen remains in an 1,800 psi system, half the oxygen is left.

A pressure gauge is always mounted at each flight station, usually on the regulator. These gauges are calibrated to indicate from 0 to 2,000 psi on high-pressure systems and 0 to 500 psi on reduced high-pressure systems.

TYPICAL GASEOUS OXYGEN SYSTEMS

As previously stated, naval aircraft equipped with high-pressure oxygen systems are designed for approximately 1,800 psi, and working pressures reduce to 60 to 70 psi by a reducer or regulator. Systems equipped with pressure reducers are referred to as reduced high-pressure systems. The reduced high-pressure gaseous oxygen system shown in figure 4-5 is typical of such systems. Oxygen is stored in three high--pressure cylinders and supplies three regulators—one each for the pilot, copilot, and flight engineer.

SYSTEM OPERATION

The pressure manifold, which is equipped with internal check valves, receives oxygen flow from the cylinders, directs the flow into a common line, and routes it to the pressure reducer. The manifold assembly also connects to a filler line, allowing the three cylinders to be recharged simultaneously from an external supply. The pressure reducer decreases the pressure to 65 psi.

Incorporated on the low-pressure side of the pressure reducer is a relief valve, which connects

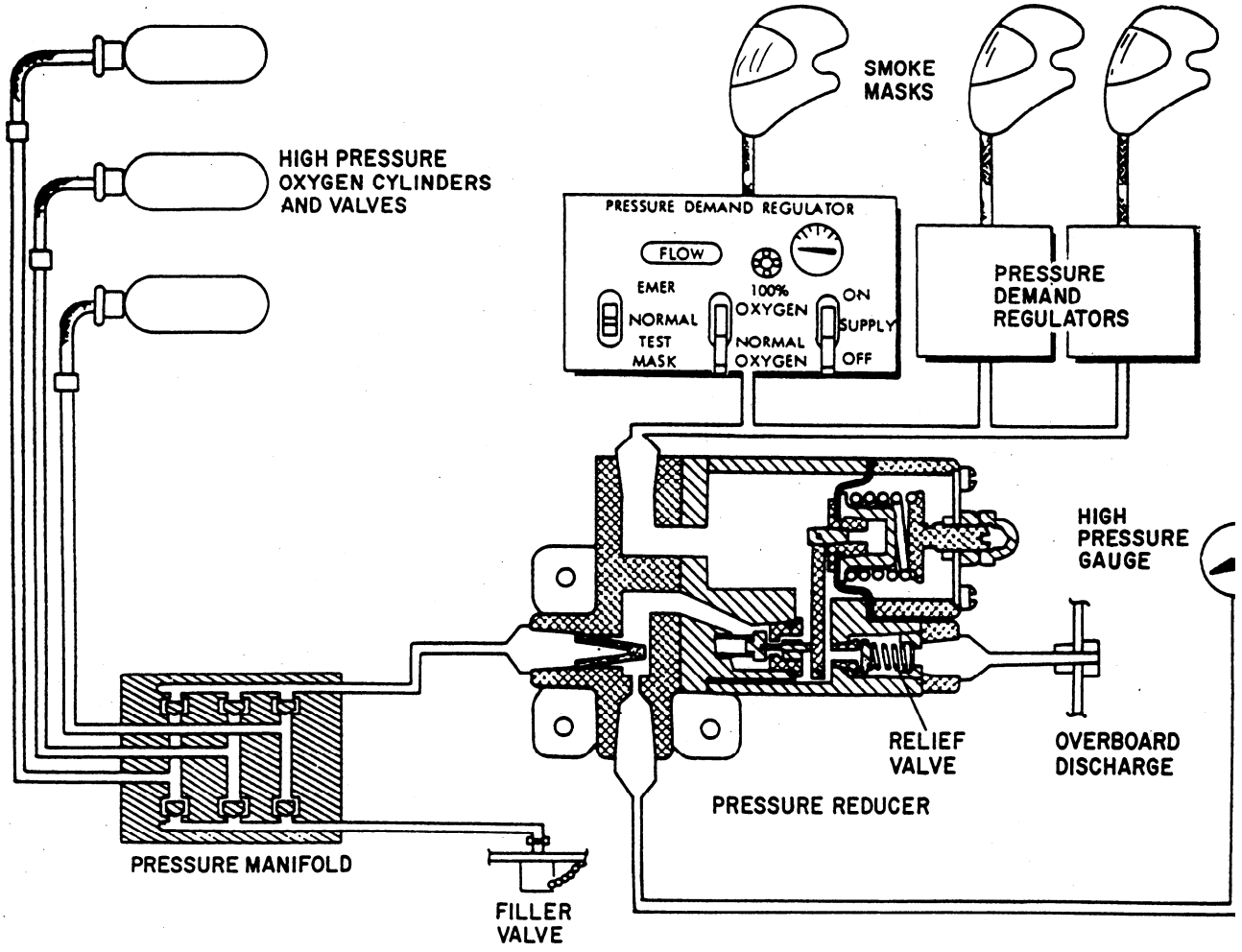

Figure 4-5.—Reduced high-pressure oxygen system schematic,

through tubing to an overboard discharge indicator. In the event of excessive pressure developing within the low-pressure section of the pressure reducer, the excess pressure will flow through the relief valve and out the overboard discharge line. This flow will rupture the green disc in the discharge indicator, giving a visual indication of a malfunctioning pressure reducer.

A line from the high-pressure side of the pressure reducer connects to a gauge in the cockpit. This gauge gives the pilot an indication of pressure in the three storage cylinders.

The oxygen flows from the low-pressure side of the reducer to the three regulators. A flexible hose attached to each regulator is for attachment of the oxygen mask.

Portable Oxygen Systems

Portable oxygen systems include walkaround cylinders, survival kits, and bailout units. These systems are used primarily to maintain crew functions in the event of failure of the fixed oxygen systems. The survival kit oxygen system also performs the same function during descent after bailout. All of these are small, lightweight, high-pressure, self-contained gaseous systems, which are readily removed from the aircraft.

Walkaround Cylinders

Walkaround cylinders are standard equipment on many transport, patrol, and early warning aircraft, and are used separately or in addition to a permanently installed oxygen system. Each system consists of a reducer and regulator assembly mounted directly on a small oxygen cylinder.

Figure 4-6 illustrates a high-pressure walk-around oxygen system. A 295 or 514 cubic inch-capacity, 1,800 psi cylinder is equipped with a regulator, which is connected to the cylinder with a short coiled length of copper tubing. A short flexible breathing tube, clamped to the outlet of the regulator at one end and fitted with a connector at the other end, provides the necessary assembly for the attachment of the demand mask tube. Straps fastened to the cylinder bracket provide the means for securing the unit to the user's seat or part of the aircraft's structure. The cylinder bracket may be placed horizontally or stood on end while in use. The straps can be used as a handle to carry it from place to place. Because of its weight, the walkaround unit should not be carried by its breathing tube, regulator, or copper tubing.

SYSTEM MAINTENANCE

The maintenance procedures discussed in this section are general in nature. Consult the applicable MIM prior to performing any maintenance on each specific type of aircraft. Routine maintenance includes servicing of cylinders, checking the system and regulators for

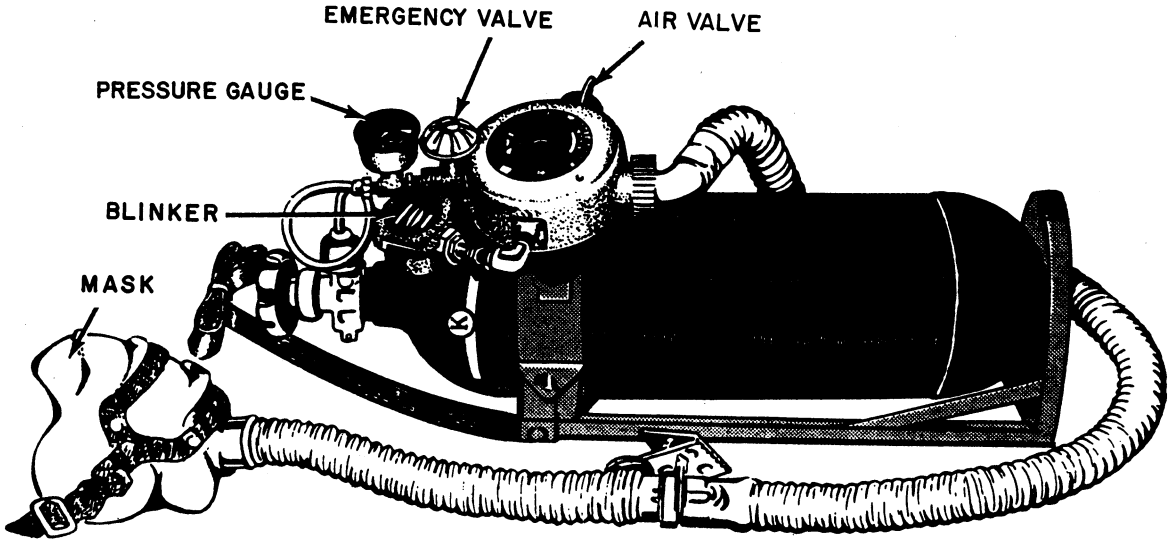

Figure 4-6.—Walkaround oxygen bottle cylinder.

leaks, operationally checking the system, and troubleshooting malfunctions.

Malfunctions may become apparent during inspections, testing, or actual use of the oxygen system. The remedies for some malfunctions will be quite obvious, while others may require extensive time and effort to pinpoint the actual cause. The effectiveness of corrective action will be dependent on an accurate diagnosis of the malfunction.

Troubleshooting of the gaseous oxygen system, as with other systems, is the process of locating a malfunctioning component or unit in a system or mechanism. To troubleshoot intelligently, you must be familiar with the system and know the function of each component within the system. You can study the schematic diagrams of the system provided in the MIM to gain a mental picture of the location of each component in relation to other components. By learning to interpret these diagrams, you can save time in isolating malfunctioning components. The schematic diagram does not indicate the location of components in the aircraft; however, it will provide the means to trace the oxygen flow from the cylinder through each component to the mask.

Installation diagrams provided in either the MIM or the Illustrated Parts Breakdown (IPB) will assist you in locating the particular component in the aircraft.

The MIMs provide a variety of troubleshooting charts, which are intended to aid you in discovering the cause of malfunction and its remedy. Table 4-1 illustrates one type of chart. The discrepancy is listed in the first column with

Table 4-1.—Gaseous Oxygen System Troubleshooting

Discrepancy	Probable cause	Remedy
Excessive leakage of system pressure.	Filler valve leaking.	Replace filler valve.
	Leak in lines.	Check tubing, fittings, and connections and repair or replace as necessary.
	Flexible hose leaking.	Replace hose.
	Regulator not shut off.	Shut off regulator.
Crewmember receives insufficient oxygen at high altitude.	Improperly functioning regulator.	Replace regulator.
	Ill-fitting mask.	Refit or replace mask.
	Mask flapper valve not operating properly.	Check mask exhaust valve.
	Flexible tubing to mask crushed or kinked.	Replace tubing as necessary.
No pressure reading at the regulator.	Defective regulator.	Replace regulator.
	Oxygen supply turned off.	Turn on cylinder hand valve if so equipped.
	System not charged.	Replenish oxygen supply.
Regulator pressure gauge indications are incorrect.	Gauge defective.	Replace gauge.
Regulator flow indicator not functioning.	Indicator defective.	Replace regulator.

the probable cause in the second and the remedy in the third. The list of probable causes is arranged in the order of probability of occurrence.

Some manufacturer's troubleshooting charts or aids may include several sheets, similar to the one illustrated in table 4-2, This sheet gives a step-by-step method to correct known malfunctions. Notice how each step progresses through the system. At each step it indicates a correction procedure; however, if the system checks OK at that point, directions are given to proceed with further logical troubleshooting. In almost all cases, the steps of troubleshooting are arranged to correspond with the steps of the operational 'checkout procedures.

LIQUID OXYGEN (LOX) SYSTEMS

Learning Objective: Identify safety precautions, components, installation and testing of components, and operating procedures for liquid oxygen (LOX) systems.

Liquid oxygen, commonly referred to as LOX, is normally obtained by a combined cooling and pressurization process. When the temperature of gaseous oxygen is lowered to -182°F under 720 psi pressure. it will begin to form into a liquid. When the temperature is lowered to – 297°F, it

Table 4-2.—Oxygen System Troubleshooting

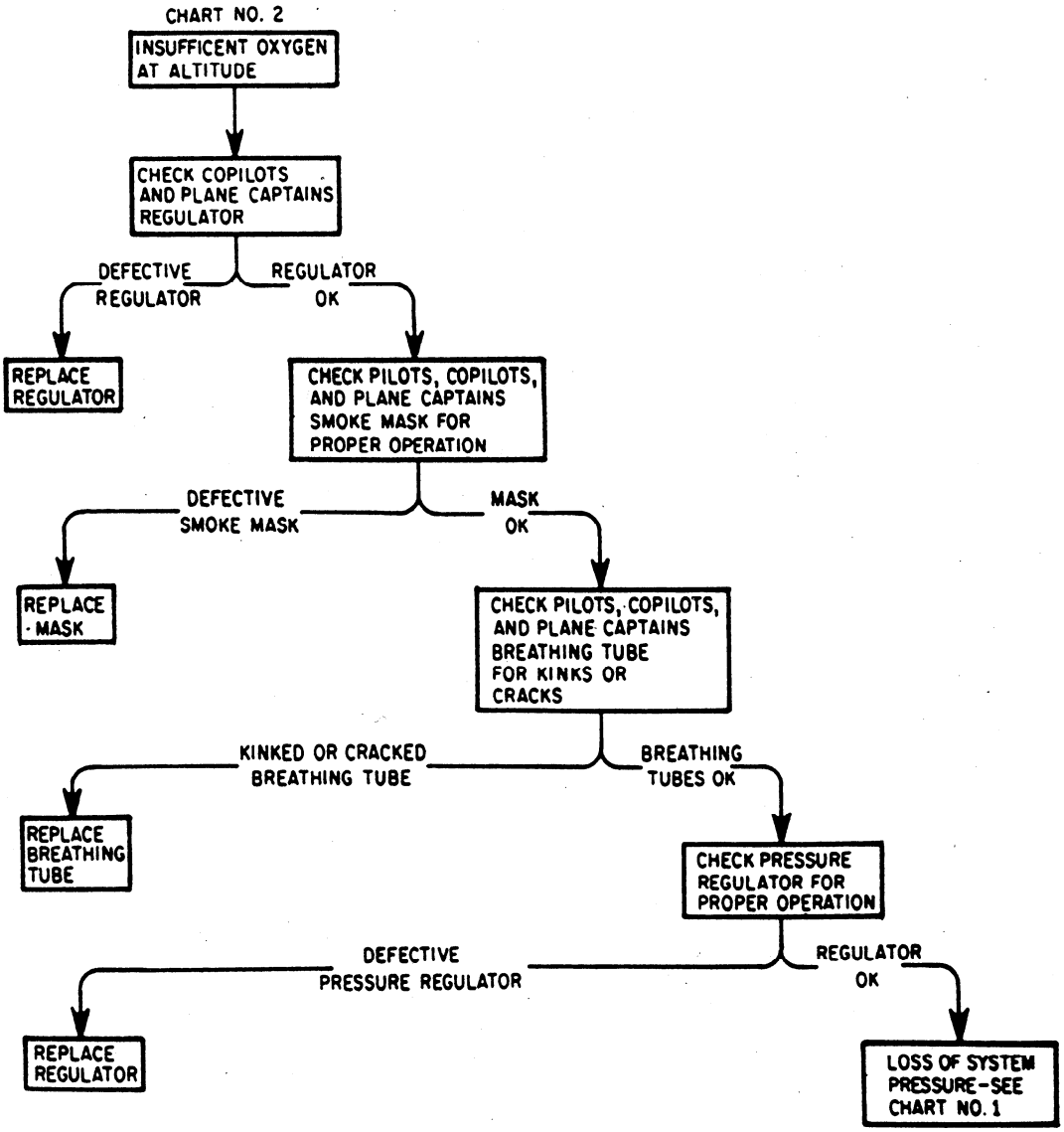

will remain a liquid under-normal atmospheric pressure.

Once converted into a liquid, oxygen will remain in its liquid state as long as the temperature is maintained below -297°F. The liquid has an expansion ratio of about 862 to 1, which means that one volume of LOX will expand about 862 times when converted to a gas at atmospheric pressure. Thus, 1 liter of LOX produces about 862 liters of gaseous oxygen.

SAFETY PRECAUTIONS

As already mentioned, the main dangers of LOX are the extremely low temperature of the liquid, its expansion ratio, and its support of violent combustion. The liquid is nontoxic, but will freeze (burn) the skin severely upon contact.

Use extreme caution not to touch implements containing LOX unless gloves are worn. Without gloves, bare skin would immediately stick and freeze to the metal surface.

Personnel that could be exposed to accidental spillage of LOX must wear a face shield, coveralls, gloves, and oxygen safety shoes to prevent skin and vision damage. Open gloves, low cut shoes, trousers with cuffs, and similar improper clothing that can form pockets capable of holding a quantity of LOX in contact with the skin present a severe hazard. All personnel handling LOX must wear the protective clothing specified in the protective clothing section of NAVAIR 13-1-6.4.

A greater danger than freezing is the combustion supporting potential of oxygen. When LOX is used, it is possible to build up high concentrations of oxygen quickly. Many materials such as cloth, wood, grease, oil, paint, or tar will burn violently when saturated with oxygen, provided an ignition source is supplied. A static electric discharge or spark can serve as an igniter. Once an oxygen-enriched fire is started, it is virtually impossible to extinguish until the oxygen supply is cut off.

An added danger exists if a combustible material is saturated with oxygen at low temperatures. Many materials, especially hydrocarbons, tar, etc., will burn with explosive violence when so saturated or subjected to very mild shock or impact.

Extreme care must be taken not to splash or spill LOX on clothing. When LOX come in contact with cloth, an ideal and deadly situation for a fire exists—a fire that cannot be put out.

LOX by itself will not burn, but mixed with the smallest amount of almost any material will cause the liquid to boil and splash violently, making combustion possible. If splashed out of a container, LOX will break into many parts upon contact with the floor\deck. It must be poured slowly from one container to another to avoid splashing, and to allow the gaining receptacle to cool sufficiently without thermal breakage.

NEVER seal or cap the vent port of a liquid oxygen system because liquid oxygen at atmospheric pressure will generate up to 12,000 pounds of pressure if allowed to evaporate in a sealed container or system that has no relief provisions.

Access to oxygen supply/storage areas should be limited only to personnel familiar with proper handling procedures. The area should be adequately ventilated and free of any materials that could present a fire hazard. All pressure-type containers, plumbing, and pressure-relief devices should conform to the applicable maintenance manual and be kept in good repair. The vents on LOX containers are designed to have a sufficient flow capacity to carry away any oxygen that may boil off in case of accidental loss of insulation. Do NOT cap such vents or cause the opening to be restricted in any way.

The pressure relief assembly in LOX system storage vessels consists of a reseatable relief valve and a rupture disc in parallel. The assembly is designed so that the relief valve relieves first, with the rupture disc acting as a safety backup in the event the relief valve malfunctions or its relieving capacity is exceeded.

LOX converters and servicing trailers should be stowed or parked so that they are protected from excessive heat and the direct rays of sunlight as much as is practical. All LOX should be segregated from containers of other gases or liquids and all flammable materials. Hydrocarbons such as oil and grease in the xygen handling area could result in death, serious injury, and property damage.

Smoking, open flames, or sparks are not ermitted in any oxygen handling area. When transferring oxygen, provide adequate ventilation to prevent the formation of an oxygen enriched atmosphere.

Avoid spilling LOX on floors or deck areas. In case of accidental spillage, ventilate the area. Intentional drainage of LOX from a system or container must be caught in a clean drain pan and allowed to evaporate in a suitable open area that will not present a hazard.

In the event that LOX is spilled on clothing, separate clothing from skin contact immediately,

and thoroughly air clothing for 1 hour to allow dilution of the oxygen concentration. When an uninsulated container of LOX is touched or when there is any reason to suspect some part of the body has been frozen or chilled, the area should be thoroughly washed or immersed in clean water that is slightly above body temperature (approximately 104°F to 113°F). The exposed area should then be loosely wrapped with clean, dry dressing, and medical aid sought immediately.

When servicing and maintaining LOX systems, the AME will be required to transfer LOX from servicing trailers to aircraft converters, and occasionally from the converter to a drain pan. The AME will also be required to remove and install converters and other components of LOX systems. All servicing and maintenance of LOX systems must be done in accordance with the instructions contained in the applicable aircraft MIM. All safety precautions concerning the handling of LOX must be adhered to.

When a completely empty system is being serviced, the LOX should be added slowly to cool the converter down to the storage temperature (– 297°F). The converter could otherwise be damaged by thermal shock or rapid pressure buildup.

Additional gaseous and liquid oxygen safety precautions and handling procedures are provided in the following publications:

1. NAVAIR Al-NAOSH-SAF-000/P5100/l , NAVAIROSH Requirements for the Shore Establishment

2. NAVAIR 06-30-501, Technical Manual of Oxygen/Nitrogen Cryogenic Systems

All personnel handling oxygen and maintaining gaseous or liquid oxygen systems should be thoroughly familiar with all the precautions and procedures listed in the latest revisions to these publications. They should also be familiar with the specific precautions provided in the applicable aircraft MIM and those pertaining to the type of equipment being used to service such systems.

SYSTEM COMPONENTS

Aircraft LOX systems are similar to gaseous oxygen systems except that the several cylinders of gaseous oxygen are replaced by one or more LOX converters. The use of more than one converter provides for an adequate supply of oxygen on long-range flights or where there is more than one crew member using the oxygen system. In addition to the converter(s), most LOX systems contain a heat exchanger, shutoff valves, and quantity indicating units. See figure 4-7 for a schematic diagram of a LOX system.

Container

The LOX converter consists of an inner and outer shell of stainless steel separated by a vacuum. A blowout disc provides a margin of safety from explosion if a leak occurs in the inner shell.

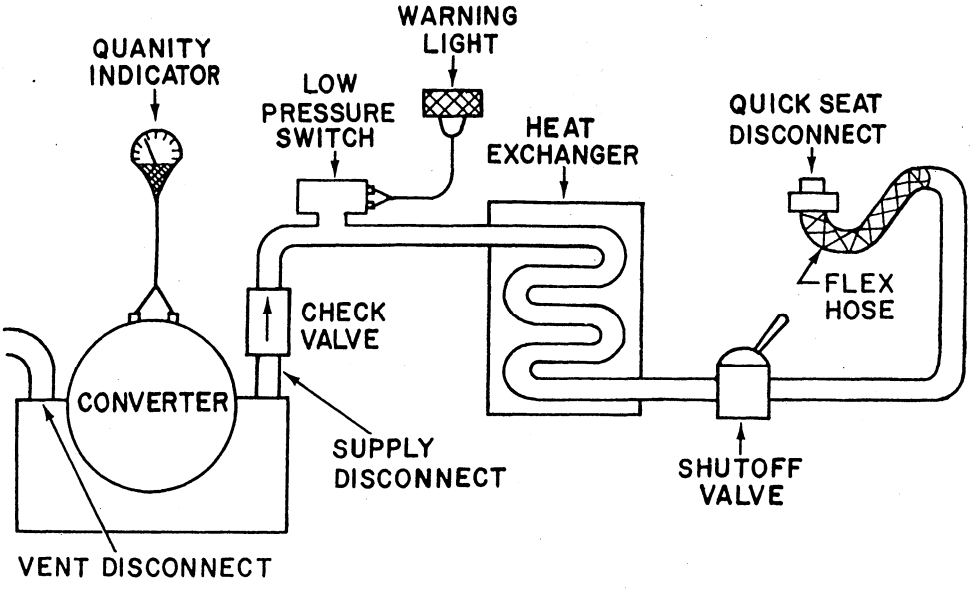

Figure 4-7.—LOX system schematic.

Filler Valve

The filler valve is a combination filler, vent, and buildup valve. The filler portion of the valve is essentially a spring-loaded check valve (fig. 4-8). When the servicing hose of the LOX cart is coupled to the filler connection, the poppet is displaced. This seals the supply port and allows container pressure to be relieved through the vent port. At the same time, oxygen flows through the filler connection and fill port to the container. When the container is full, the liquid flows from the container through the gas port and then through the vent port. In the normal position, the spring in the filler connection holds the poppet in place, forming a gastight seal. There is a check valve in the fill port that acts as a backup seal in the event the filler connection develops a leak. The vent port is also sealed in this position, allowing the gaseous boiloff (from the top of the container) to flow through the gas port to the supply port and into the oxygen system.

Pressure Control Valve

The pressure control valve used on most converters is a combination opening and closing valve (two valves contained within one housing). These valves are controlled by spring-loaded bellows. The pressure closing valve is spring-loaded open and the pressure opening valve is spring-loaded closed. The pressure closing valve maintains operating pressure within the converter. The pressure opening valve controls the flow of gaseous oxygen into the supply line. If the pilot's demand for oxygen becomes greater than the capability of the pressure opening valve to deliver, there is a differential check valve that opens and allows liquid oxygen to flow directly into the supply line. It is transformed into gaseous oxygen during its passage through the oxygen system supply lines.

Relief Valves

A relief valve is provided in the converter to relieve excessive pressure buildup in the event of a malfunction in the pressure control valves. It also relieves normal pressure buildup when the system is not in use. This normal buildup pressure is caused by heat entering the system, and will cause a loss of 10 percent of the systems capacity every 24 hours. As an example, approximately 1 liter of loss will be experienced from a 10-liter converter.

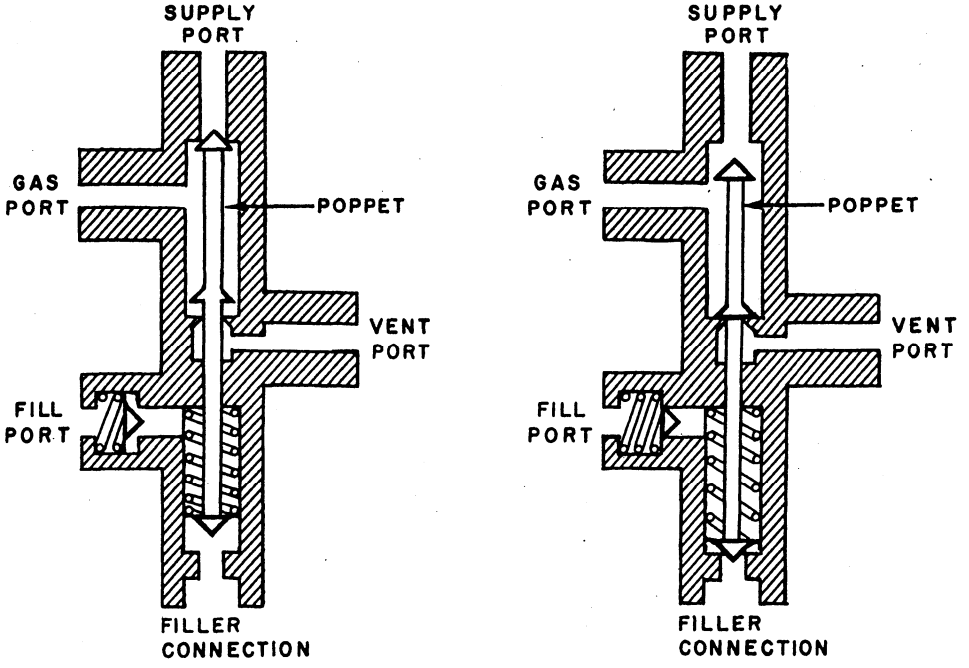

Figure 4-8.—Filler valve.

Quick-Disconnect Couplings

Liquid oxygen systems are designed for the rapid removal of the LOX converter for ease of servicing and maintenance. This is accomplished by the use of supply and vent quick-disconnect couplings, a single point converter retainer wing nut hold down, and quick-disconnect quantity indicator lead disconnects (fig. 4-9).

The vent and supply quick-disconnect couplings are of two-piece construction. The male half is mounted on the LOX converter, and the female half is attached to the flexible oxygen supply and vent lines.

The coupling for the supply line contains a spring-loaded check valve, which closes automatically when the supply line is uncoupled from the converter. This prevents contaminating the aircraft oxygen system when the converter is removed for servicing. The vent coupling has no check valve; however, it forms a positive seal between the vent port of the converter and overboard vent line.

Heat Exchanger

The lungs would be damaged if gaseous oxygen were breathed at the temperature at which it exits the LOX converter. The purpose of the air-to-oxygen heat exchanger is to increase the temperature of the gaseous oxygen after it leaves the LOX converter. The heat exchanger is located in the cockpit area of the aircraft in order to expose it to a temperature capable of warming the gaseous oxygen regardless of the altitude of the aircraft. The heat exchanger is constructed of aluminum and has a large interior surface area (fig. 4-10).

Low-Pressure Switch

The low-pressure switch is located in the oxygen system supply line (fig. 4-7). It indicates to the flight crew, through a caution light in the aircraft cabin, when system pressure falls below minimum operating pressure of the system. This alerts and allows the pilot to descend to a safe altitude.

Quantity Indicating System

The quantity indicating system consists of a quantity gauge and a warning light. These are located in the cockpit of the aircraft. A quantity probe is also a part of the liquid oxygen converter.

This probe senses the amount (quantity) of liquid contained in the converter. This information is transmitted to the quantity gauge by an

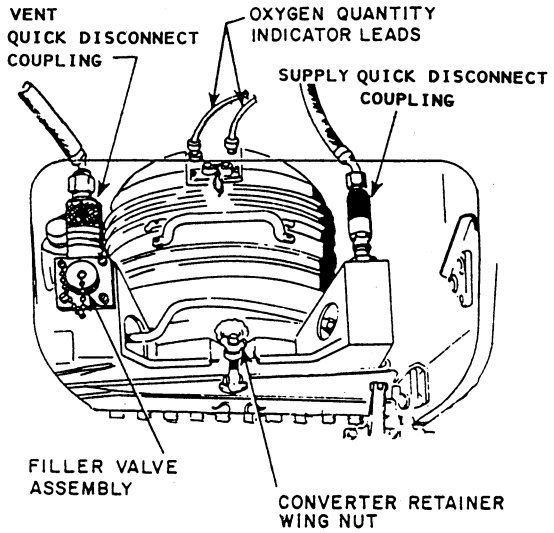

Figure 4-9.—LOX converter installation.

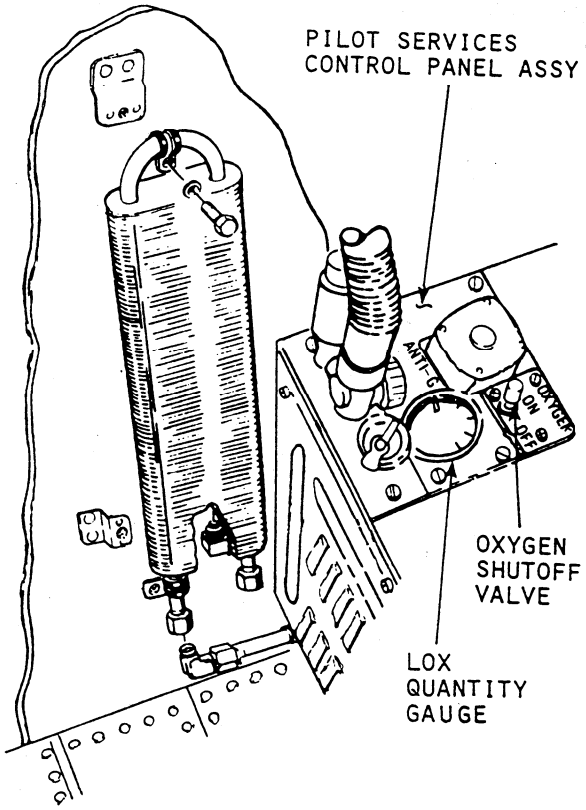

Figure 4-10.—Aircraft air-to-oxygen heat exchanger.

electrical coaxial cable. The quantity gauge is marked in liters from zero to the systems maximum storage capacity (i.e., 0 to 10). The gauge constantly shows the remaining liquid in the converter. The low quantity warning light is also connected to the coaxial cable and illuminates when the quantity of liquid in the converter falls below 1 liter. The maintenance of the quantity indicating and warning light system is the responsibility of the AE rating. You, as an AME, must understand the operation of the electrical portion of the LOX system in order to troubleshoot the indicator and warning systems.

Oxygen Shutoff Valve

The oxygen shutoff valve is installed in the system to control the flow of oxygen to the pilot or flight crew, as required. Figure 4-11 illustrates a typical manually operated two-position valve. This valve has an inlet port, outlet port, and a relief port. The pressure-relief valve is located in the inlet chamber to protect the oxygen regulator and crew member from excessive system pressure if there is a malfunction of the liquid oxygen converter. Also, excessive pressure due to thermal expansion of gaseous oxygen trapped within the system when not in use is relieved by this valve. If the oxygen system incorporates a console-mounted regulator, the shutoff valve is a part of the regulator.

Composite Quick-Disconnect Coupling

The purpose of the composite quick-disconnect coupling is to provide a single-point connection for quickly connecting and disconnecting the pilot with aircraft oxygen, anti-g, communications, and ventilation air services.

Oxygen Lines

LOX systems are classed as low-pressure systems. As such, low-pressure tubing is used in the manufacture and repair of LOX lines. All low-pressure tubing used in LOX systems are aluminum alloy 5052 tubing and is nonheat-treatable. It is manufactured in seamless, round lengths, and is annealed to provide greater flexibility. Aircraft oxygen systems are fitted with 5/16-, 3/8-, and 1/2-inch sizes. Low-pressure tubing is also installed from the pressure reducer to the outlets in reduced high-pressure oxygen systems.

Oxygen Regulators

Regulators used with LOX systems are either console-mounted or miniature mask-mounted.

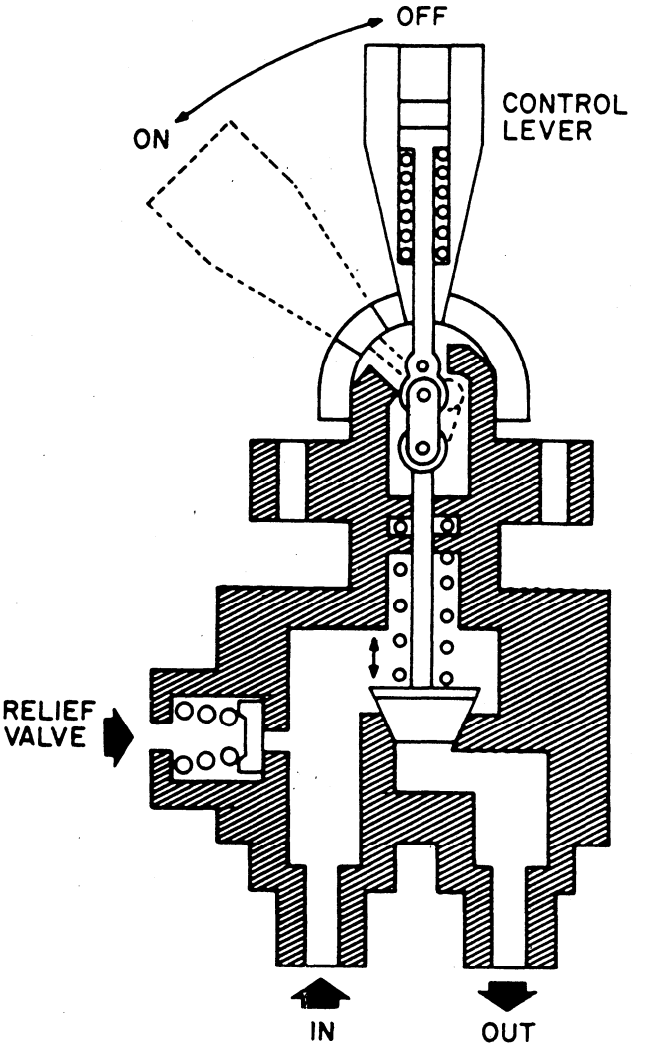

Figure 4-11.—Oxygen shutoff valve.

The miniature mask-mounted regulator was especially designed for use with aircraft that have ejection seats. The console-mounted regulator is normally used in large nonelection seat equipped multiplace aircraft such as the E-2 and the P-3.

Miniature Oxygen Breathing Regulator

The miniature mask oxygen regulator, shown in a cutaway view in figure 4-12, is intended primarily for use in aircraft having a low-pressure LOX system and ejection seats. It is often referred to as a miniature mask-mounted regulator. Since it weighs only 2.3 ounces and measures approximately 2 5/8 inches in length and width, it is easily mounted on the oxygen mask or user's torso harness. It is designed so that

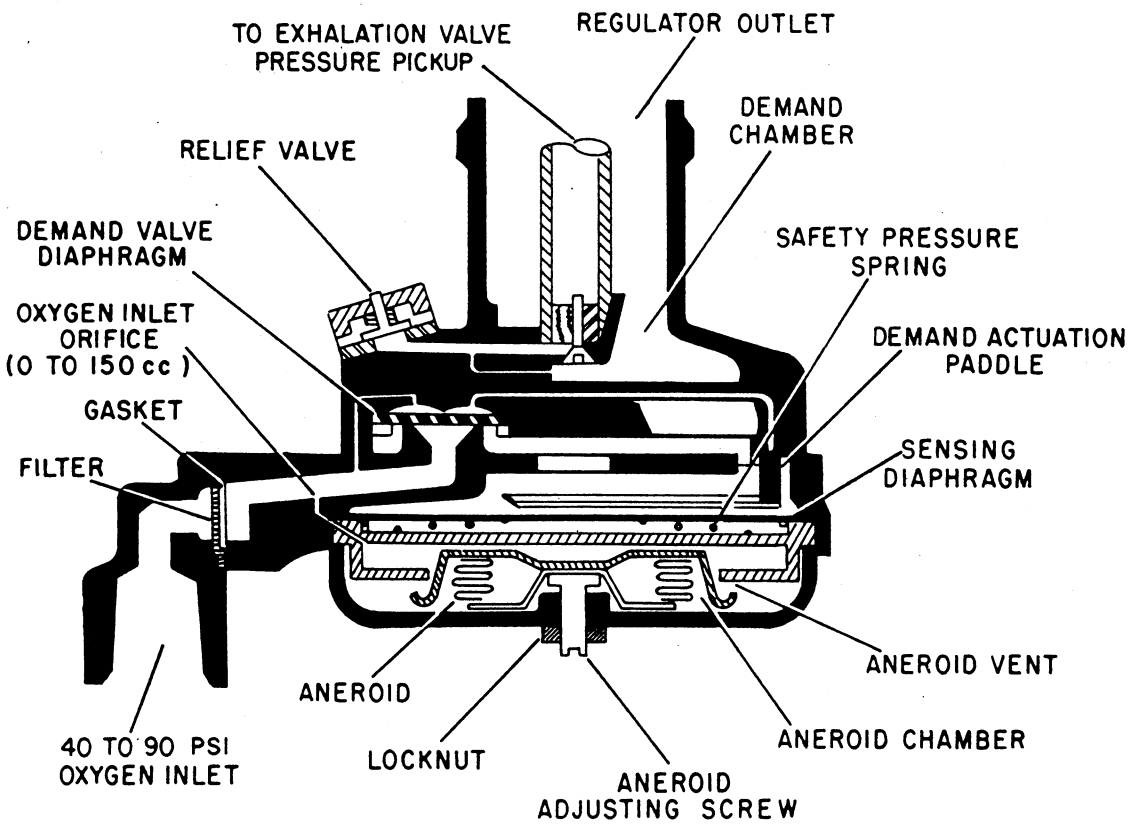

Figure 4-12.—Cutaway view of miniature oxygen regulator.

with an inlet pressure of40 t0 90 psi, it will deliver 100-percent oxygen automatically to the user between the altitudes of 0 and 50,000 feet.

Oxygen at system pressure, warmed to a comfortable temperature, flows into the regulator inlet port to the demand valve diaphragm. A small passage from the inlet line sends this pressure to the backside of the diaphragm; thus, the demand valve diaphragm is pressure balanced except for the slight imbalance caused by an area advantage on the backside of the diaphragm, which provides a positive sealing force.

The vacuum caused by inhalation causes the sensing diaphragm to tilt downward, pushing down the demand actuating paddle. As the paddle is forced downward, its base is lifted from a set, which seals a second passageway from the backside of the demand valve diaphragm. Raising the paddle base allows flow from this area, which causes a pressure drop behind the demand valve diaphragm and allows inlet pressure to lift the diaphragm from its seat, and oxygen flow occurs.

Safety pressure is obtained by the safety pressure spring, which deflects the sensing diaphragm, causing flow through the unit until the force created by mask pressure equals the force of the spring. This returns the sensing diaphragm to a balanced condition.

Automatic pressure breathing is obtained by diverting a small volume bleed from the inlet passage to the aneroid chamber. This bleed is normally vented from the aneroid cavity past the area labeled “aneroid vent” (fig. 4-12). At the altitude at which pressure breathing is to begin, the lip of the aneroid comes in contact with the seat, closing off the aneroid vent and building up pressure, which reacts on the sensing diaphragm. The pressure lifts the sensing diaphragm, causing flow until the mask pressure exerts a force on the sensing diaphragm equal to the force exerted by pressure buildup in the aneroid chamber.

The relief valve on the unit acts as a pilot device to open the exhalation valve of the mask. This is done by isolating the pressure pickup of the exhalation valve with the tube in the outlet port of the unit, so that the exhalation valve is compensated only by the pressure sent to it by the exhalation valve pickup tube.

Aircraft-Mounted Oxygen Regulators

The MD series regulator is being used in several multiplace naval aircraft. There are two types of regulators in this series—the MD-1 (low-pressure) and MD-2 (high-pressure). The only difference found in these regulators is operating pressure. The operating pressure of the MD-1 regulator is 50 to 500 psi. The pressure gauge reads 0 to 500 psi. The operating pressure of the MD-2 regulator is 50 to 2,000 psi. The pressure gauge reads 0 to 2,000 psi.

The following controls and indicators are located on the front panel of the regulator (fig. 4-13). The small oblong-shaped window area on the left side of the panel marked FLOW indicates the flow of oxygen through the regulator by a visible blinking action. The pressure gauge is found on the upper right of the panel and indicates inlet pressure to the regulator. The regulator has three control levers. A supply valve controller lever, located on the lower right corner, is used to control the supply of oxygen to the regulator; a diluter control lever, located on the lower center of the panel, has two positions—100% OXYGEN and NORMAL OXYGEN; an emergency pressure control lever, located on the lower left of the panel, has three positions—EMERGENCY, NORMAL, and TEST MASK, and with the deluter lever in the 100% OXYGEN position, the regulator delivers 100 percent oxygen upon inhalation by the user. In the NORMAL OXYGEN position, the regulator delivers a mixture of air and oxygen with the air content decreasing until a cabin altitude of approximately 30,000 feet is reached. Above this altitude, 100-percent oxygen is delivered to the user upon inhalation.

With the emergency pressure control lever in the EMERGENCY position, the regulator delivers positive oxygen pressure to the outlet at altitudes when positive pressure is not automatically delivered. In the TEST MASK position, oxygen is delivered to the mask under pressure too high to breathe and is used for checking the fit of the mask. The switch must be in the NORMAL position to assure normal system operation.

Refer to figure 4-14 for the operation of an MD type regulator.

1. Supply oxygen entering through the oxygen inlet (1) is filtered and passes through the manifold

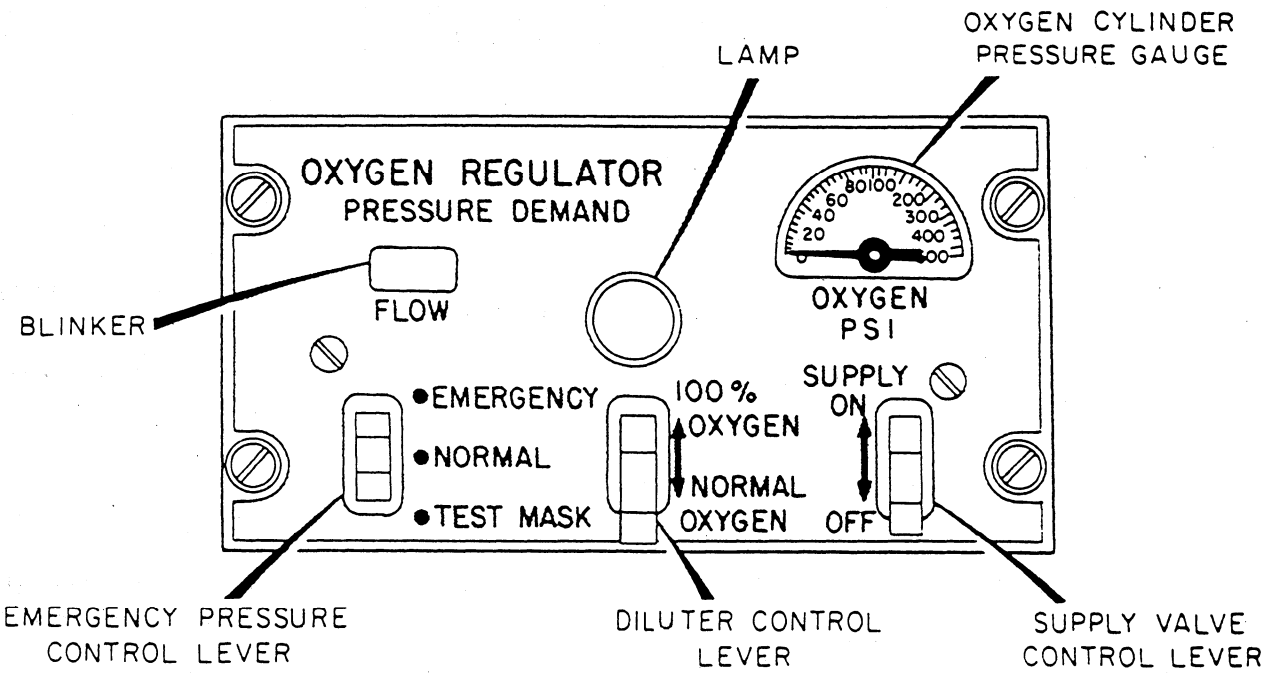

Figure 4-13.—Regulator operating controls and indicators.

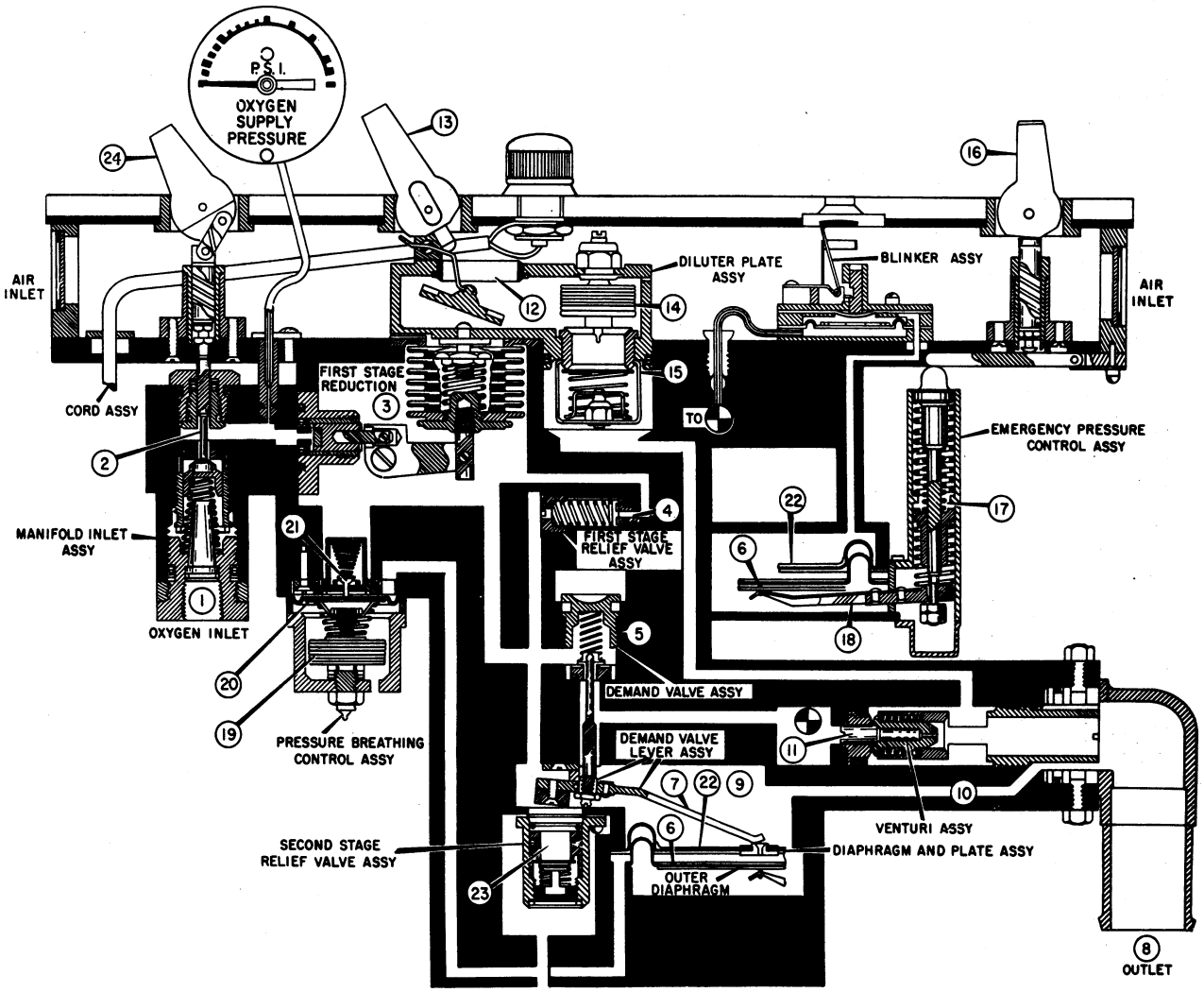

1. Inlet
2. Inlet supply valve
3. Reduction chamber
4. Relief valve
5. Demand valve
6. Diaphragm
7. Demand valve lever
8. Outlet
9. Demand diaphragm chamber
10. Sensing port
11. Venturi assembly
12. Inlet port
13. Diluter control lever
14. Diluter aneroid
15. Check valve
16. Emergency pressure control lever
17. Test spring
18. Control lever
19. Aneroid
20. Diaphragm
21. Pressure breather valve
22. Plate assembly
23. Relief valve
24. Supply valve control lever

Figure 4-14.—MD regulator operational drawing.

inlet assembly into the inlet supply valve (2), and then into the first-stage reduction chamber (3) by action of the inlet supply valve control lever 24. The pressure of the flowing oxygen is registered on the oxygen supply pressure gauge.

2. The reduction chamber incorporates the first-stage relief valve assembly (4) to protect the regulate; against overpressures.

3. The demand valve assembly (5) is opened when the pressure across demand outer

diaphragm (6) forces the demand valve lever assembly (7) down. The pressure differential exists during the inhalation cycle of the user by creating a reduction in the pressure outlet (8).

4. Reduction in pressure at the pressure outlet is sensed in the demand diaphragm chamber (9) through the sensing port (10).

5 During periods of flow, the oxygen passes through the venturi assembly (11). At the venturi assembly, the flow of oxygen mixes with ambient air, which enters the regulator through the inlet ports (12).

6. The addition of ambient air to oxygen is controlled by the manual diluter control lever (13) and by the diluter aneroid assembly (14), which automatically produces a 100-percent oxygen concentration at altitudes above 32,000 feet.

7. The aneroid check valve assembly (15) prevents a flow of oxygen out through the inlet ports.

8. The emergency pressure control lever (16) applies force to the emergency pressure control test spring (17), which mechanically loads the emergency pressure diaphragm (25) through the control lever and center assembly (18). Mechanical loading of the emergency pressure diaphragm provides positive pressure at the regulator outlet.

9. Both automatic safety pressure and pressure breathing at altitudes above 30,000 feet are provided through pneumatic actuation of the aneroid assembly (19). This function begins near 27,000 feet altitude. The force exerted on the diaphragm assembly (20) by the aneroid assembly actuates the pressure breather valve assembly (21), and oxygen flows to the diaphragm and the plate assembly (22), which is pressure loaded by this volume of oxygen acting on the demand valve lever assembly to the extent that the positive pressure is built up at the pressure outlet as the altitude increases.

10. Additional safety is obtained through the inclusion of the second-stage relief valve assembly (23) in the regulator.

TURNAROUND/PREFLIGHT/POST-FLIGHT/TRANSFER INSPECTIONS.— These inspections are visual inspections performed in conjunction with the inspection requirements for the aircraft in which the regulators are installed. Refer to table 4-3 for assistance in troubleshooting.

Visually inspect the following:

1. Electrical performance of the panel light
2. Legibility of all the markings
3. Plastic lighting plate for cracks and discoloration
4. Low or improper reading on regulator pressure gauge
5. Emergency pressure control lever in NORMAL position
6. Diluter control lever in 100% OXYGEN position
7. Supply valve control lever in OFF position
8. Regulator and surrounding area free of dirt and hydrocarbons
9. Delivery hose and connector for cuts, fraying, kinking, hydrocarbons, and general condition

If discrepancies are found or suspected. maintenance control should be notified.

Regulators that do not pass inspection and cannot be repaired in the aircraft are removed and replaced by ready-for-issue (RFI) regulators. Non-RFI regulators are forwarded to the nearest maintenance activity having repair capability.

ACCEPTANCE/SPECIAL/DAILY INSPECTIONS.— These inspections are visual inspections followed by a functional test. These inspections and tests are performed in conjunction with the inspection requirements for the aircraft in which the regulators are installed. Refer to table 4-3 for assistance in troubleshooting.

WARNING

Make certain that when working with oxygen, all clothing, tube fittings, and equipment are free of oil, grease, fuel, hydraulic fluid, or any combustible liquid. Fire and/or explosion may result when even slight traces of combustible material come in contact with oxygen under pressure.

To perform the functional test, proceed as follows:

1. Place supply valve control lever in the ON position.
2. Place the diluter control lever in the NORMAL OXYGEN position.
3. Connect the oxygen hose to the quick disconnect, place the mask to the face, and inhale. Proper regulator operation will be indicated by the flow indicator assembly

Table 4-3.—Troubleshooting (Daily, preflight, special, turnaround, transfer and acceptance inspections)

Trouble	Probable Cause	Remedy
Oxygen cylinder pressure gauge fails to indicate proper pressure	Defective gauge	Replace regulator.
	Blocked or leaking supply line	Replace or clean supply line to regulator.
	Low cylinder pressure	Refill.
	Defective manifold inlet assembly	Replace regulator.
Oxygen not available at mask with proper pressure source to regulator and other than emergency setting on regulator	Regulator controls improperly positioned	Correct position of controls.
	Hose to mask is kinked	Straighten hose and reposition outlet.
	Regulator not functioning properly	Replace regulator.
Oxygen not available at mask with proper pressure source to regulator and regulator control set at EMERGENCY	Kink or other malfunction between hose and mask	Replace or readjust equipment as necessary.
	Faulty linkage from emergency pressure control lever	Replace regulator.
Oxygen available at mask but flow is not indicated	Defective blinker assembly	Replace regulator.
Gauge pressure drops when regulator is not in use	Loose or leaking connections	Tighten or replace connections as necessary.
	Defective manifold inlet assembly	Replace regulator.
Panel light fails to light	Burned out lamp	Replace lamp.
	Faulty light assembly	Replace regulator.
	Faulty electrical hookup to power source.	Repair electrical hookup.

showing white during inhalation and black during exhalation.

While at ground level, the regulator will not normally supply oxygen from the supply system to the mask. Therefore, the emergency pressure control lever must be used to check the oxygen supply function of the regulator at low altitudes. The emergency lever is spring loaded at the NORMAL position, and will return to NORMAL when released.

4. Hold the emergency pressure control lever in the TEST MASK position and observe the flow indicator. Flow indicator should be white, indicating a flow through the regulator.

Upon completion of the functional test, secure the regulator as follows:

1. Disconnect the mask from the supply hose.
2. Ensure that the emergency pressure control lever returns to the NORMAL position.
3. Place the diluter control lever in the 100% position.
4. Place the supply valve control lever in the OFF position.

discrepancies are found or suspected. maintenance-control should be notified.

Regulators that do not pass inspection and cannot be repaired in the aircraft are removed and replaced by RFI regulators. Non-RFI regulators should be forwarded to the nearest maintenance activity having repair capability.

SYSTEM OPERATION

The LOX system shown in figure 4-7 is an example of a typical system. This system converts LOX to gaseous oxygen and delivers it to the crew. The oxygen source of this system is a supply of LOX stored in a 10-liter converter. System pressure is maintained at 75 to 110 psi by a pressure control valve and a pressure relief valve. The converter in this system is installed in an aft equipment compartment.

Through a process of controlled evaporation within the converter assembly, LOX is converted to gaseous oxygen as required by the occupant of the aircraft. The oxygen is delivered to the pilot after being warmed to a safe breathing temperature in the heat exchanger. The flow of oxygen is controlled in the cockpit by the shutoff valve.

The major part of the operation of the LOX system is controlled automatically by the units that make up the converter assembly. The LOX converter has three sequences of operation—fill, buildup, and supply (fig. 4-15). In the supply sequence, the converter alternates between the economy and demand modes of operation.

Fill Sequence

The fill sequence begins automatically when the servicing trailer hose filler nozzle is connected to the filler port on the filler, buildup, and vent valve. The hose nozzle, when attached to the fill valve, actuates a plunger within the valve, which places the valve in the fill and vent condition (fig. 4-15, fill sequence, view A). The valve, when in this position, provides an opening from the top of the converter to the atmosphere. This opening is used to vent gaseous oxygen during filling and liquid oxygen after the converter is full.

During transfer, liquid oxygen flows into the converter through a passage located in the bottom of the converter. This arrangement allows gaseous oxygen to vent through the converter top as it is being displaced by liquid flow in the bottom. When the converter is full, liquid flows overboard through the vent line, giving an indication that the converter is full. Removal of the filler hose nozzle from the fill valve automatically places the converter in the buildup sequence.

Buildup Sequence

The buildup sequence (fig. 4-15, buildup sequence, view B) begins when the filler hose is removed from the converter. This sequence provides for rapid pressure buildup to system operating pressure.

During this sequence, LOX from the converter fills the buildup coil by gravity feed. Liquid in the coil absorbs heat from the ambient air around the coil and vaporizes, causing the pressure to build up. The gaseous oxygen formed in the coil then circulates through the pressure closing valve and back to the top of the converter. This causes more liquid to flow into the buildup coil. This circulation continues to build up pressure until approximately 75 psi is reached. At this pressure, the pressure closing valve is forced closed. Pressure continues to buildup within the system at a slower rate, and at approximately 82 psi, the pressure opening valve opens. When this occurs, oxygen is available at the supply outlet. A pressure relief valve, which is set at approximately 110 psi,

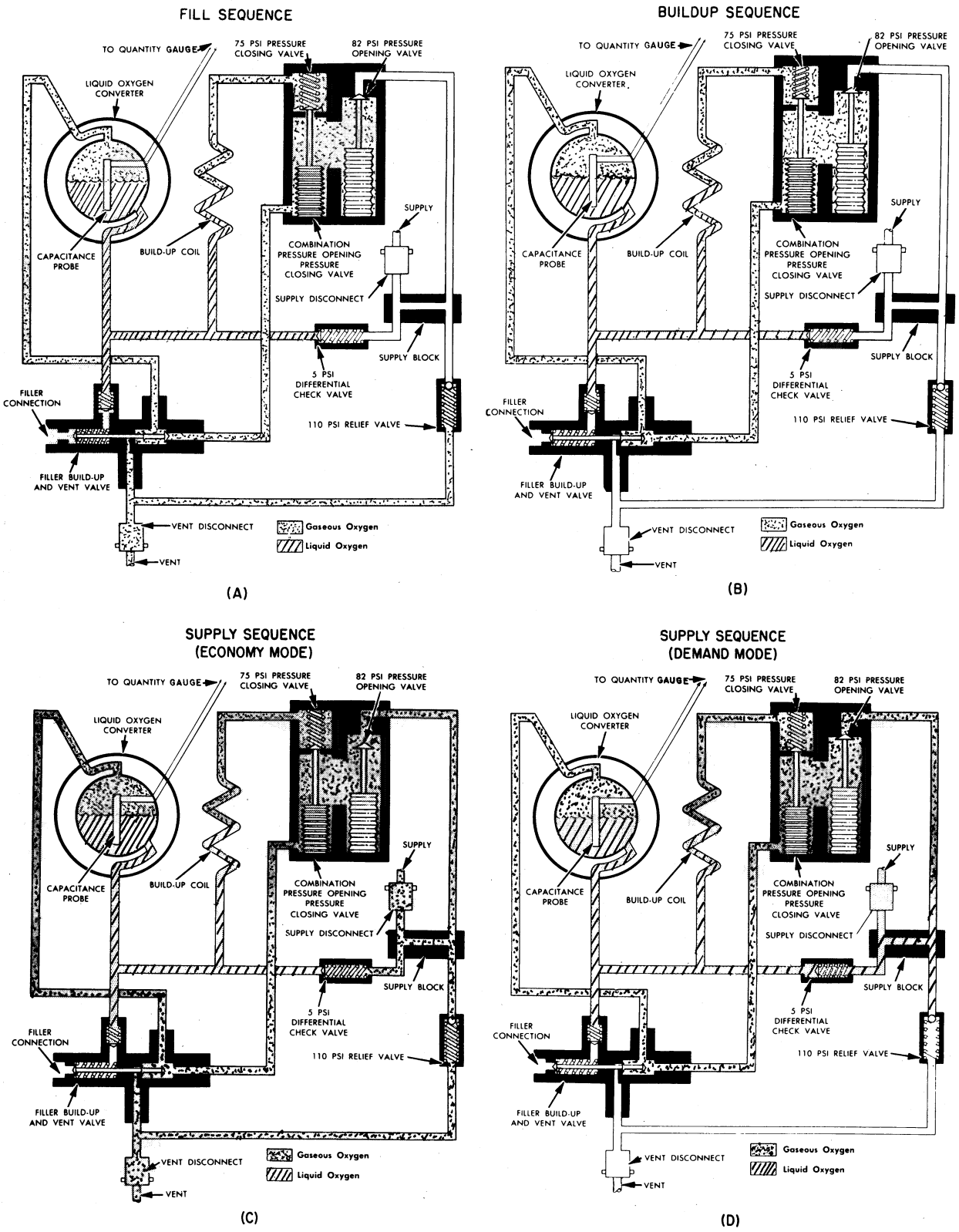

Figure 4-15.—Liquid oxygen converter operation.

is installed in the converter system to relieve excessive pressure.

Supply Sequence

The supply sequence of the liquid oxygen system consists of two modes of operation—the economy mode, in which gaseous oxygen is fed from the converter, and the demand mode, in which oxygen flows from the converter as a liquid and vaporizes to a gas in the feed line.

In the economy mode of operation (fig. 4-15, supply sequence, view C), limited demand upon the system allows the converter to supply gaseous oxygen directly as a result of drawing off the gaseous oxygen stored within the top of the converter. At approximately 82 psi, the pressure opening valve unseats and allows gaseous oxygen to flow from the converter to the supply system. Oxygen then flows from the upper (gas) portion of the converter, rather than the liquid side. When the amount of oxygen demanded by the crew exceeds the supply capabilities of the economy mode, the pressure opening valve closes. As the crew continues to draw upon the oxygen supply, the supply system pressure becomes lower than that of the converter. When a pressure differential of 5 psi occurs, the differential check valve opens (fig. 4-15, supply sequence, views C and D) and allows liquid oxygen to flow into the supply line, thus creating the demand mode. Converter pressure will build up while the system is operating in the demand mode. As the pressure again approaches 82 psi, the pressure opening valve will again unseat, switching the supply sequence back into the economy mode. The converter automatically switches itself back and forth between the economy and demand modes while supplying oxygen to the crew.

SYSTEM MAINTENANCE

Extreme care must be exercised when installing units in an oxygen system. The life of the pilot and crew depends on the thoroughness with which the AME does this job.

All maintenance of LOX systems must be done in accordance with the instructions contained in the applicable MIM. The AME assigned to do LOX system maintenance should also be familiar with the various instructions pertaining to handling LOX and maintenance of the related equipment.

The actual removal and installation procedures used in maintaining LOX systems will vary from one aircraft to another; however, the following precautions will apply to almost any aircraft system.

1. Use only tubing assemblies that have been tested, cleaned, capped, and properly identified as oxygen lines.

CAUTION

If lines are fabricated locally, ensure that only clean, oil-free tubing and fittings are used. Also ensure that no hydraulic fluid is used in the fabrication procedure.

2. Use only the type of fittings specified for the particular oxygen system. Never use fittings with pitted or otherwise disfigured cones or imperfect threads.
3. It is MANDATORY that EXTREME CAUTION be exercised with regard to cleanliness of hands, clothing, and tools. It must be emphasized that all items that come into contact with the oxygen system must be free of dirt, oil, or grease.
4. Use thread antiseize tape that is approved under specification MIL-T-27730A.
5. When installing tubing assemblies between fixed units, the tube assembly should align without the use of undue force.
6. The torque values specified for the particular oxygen system should be strictly adhered to when tightening the fittings.
7. If a section of line is left open or disconnected during an installation, the open fittings must be covered with suitable caps or plugs. When making connections, be certain that no lint, dust, chips, or other foreign material is allowed to enter the oxygen system.
8. Upon completion of the installation of a tube assembly or component, a pressure check of the system should be conducted. The system should be pressurized and the connections checked with a leak-test solution conforming to specification MIL-L-25567B. After the connections have been checked, the leak-test solution should be washed off with clean water.
9. The aircraft liquid oxygen system should be purged after the replacement of any component or tubing assembly.
10. The type of clothing and footwear that is worn when maintaining and servicing a liquid oxygen system is an extremely important factor. Do not wear anything that will produce sparks or static electricity, such as nylon clothing or shoes

with steel taps or hobnails. Oxygen-permeated clothing will burn vigorously—a most painful way to die.

11. When servicing a liquid oxygen system, ensure that only oxygen conforming to specification MIL-0-27210D is used. Oxygen procured under Federal Specification BB-0-925A is intended for technical use and should NOT be used in aircraft oxygen systems.

12. After the completion of repairs, always perform an operational check of the system and make the required tests to ensure that the oxygen is safe for use by the pilot and crew.

ONBOARD OXYGEN GENERATING SYSTEM

Learning Objective: Identify the system components and operation of the onboard oxygen generating system.

The onboard oxygen generating system (OBOGS) is an alternative to liquid oxygen (LOX). When compared to a LOX system, the OBOGS has several advantages. First, its availability y may be as high as 99 percent. There is no requirement for depot-level maintenance. The OBOGS has no daily service requirements, and scheduled preventive maintenance occurs at 2,000 hours. Incorporation of the OBOGS eliminates the need to store and transport LOX. Additionally, it eliminates the need for LOX support equipment. The potential for accidents related to LOX and high-pressure gases is greatly reduced.

SYSTEM COMPONENTS

The basic components of the OBOGS are the concentrator, oxygen monitor, and oxygen breathing regulator. The concentrator produces an oxygen-rich gas by processing engine bleed air through two sieve beds. The oxygen monitor senses the partial pressure of the gas and, if necessary, provides a low-pressure warning to the pilot. The oxygen regulator is a positive pressure regulator.

SYSTEM OPERATION

The OBOGS, shown in figure 4-16, receives engine bleed air from the outlet of the air-conditioning heat exchanger. The partially cooled air passes through an air temperature sensor to a pressure reducer assembly. The air is then routed

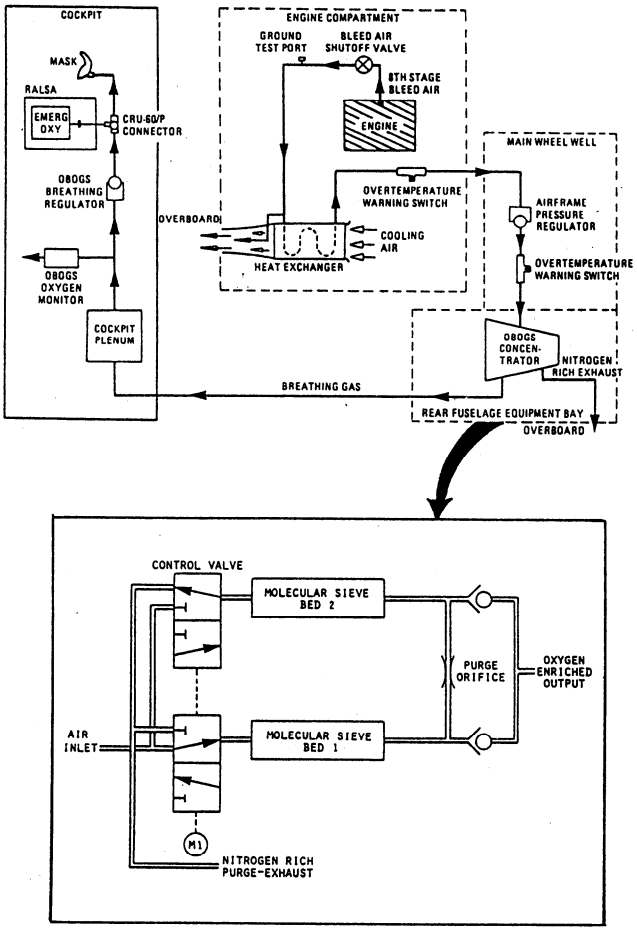

Figure 4-16.—Onboard Oxygen Generating System (OBOGS) schematic.

to the concentrator. The concentrator has a rotary valve that alternates the airflow over the molecular sieve beds. The sieve beds absorb the nitrogen and allow the oxygen and argon to pass through. Two molecular sieve beds are used in the concentrator so that while one bed is absorbing, the other is desorbing (releasing) nitrogen. This method allows a continuous flow of oxygen to the system. After the concentrator, the oxygen flows to a plenum assembly that acts as a surge tank and an accumulator. The plenum also functions as a heat exchanger to heat or cool the oxygen to approximately cockpit temperature. Before the oxygen reaches the oxygen regulator, the oxygen performance monitor senses the partial pressure of the gas and, if necessary, provides a signal to the pilot whenever the pressure exceeds prescribed limits. The oxygen then flows through the regulator to the pilot's mask.